chanhvinh.com

2.5mm pitch pluggable screwless terminal blocks

Product overview

- 2-12 pole solid block
- Screwless connectivity
- Moulded in green UL94-V0, flame retardant PA66
- Cable acceptance - 0.12mm² - 0.5mm² (26-20AWG)
- Pluggable male and female connectors
- Polarised mouldings
- cULus approved

SPECIFICATION	
Rating	UL=4A/150V, IEC=5A/250V
Insulation resistance	500MΩ/500V
Withstand voltage	AC1250V/1min
Contact resistance	20mΩ (max)
Working temperature	-40°C to +105°C
Moulding	UL94-V0, flame retardant PA66
Spring	Stainless steel
Contact	Bronze, Ni plated

Recommended PCB hole size 1.4mm

Female connector

PART NO.	POLES	LENGTH
CSTBP92HC/2	2	5.6mm
CSTBP92HC/3	3	8.1mm
CSTBP92HC/4	4	10.6mm
CSTBP92HC/5	5	13.1mm
CSTBP92HC/6	6	15.6mm
CSTBP92HC/7	7	18.1mm
CSTBP92HC/8	8	20.6mm
CSTBP92HC/9	9	23.1mm
CSTBP92HC/10	10	25.6mm
CSTBP92HC/11	11	28.1mm
CSTBP92HC/12	12	30.6mm

CSTBP92HC



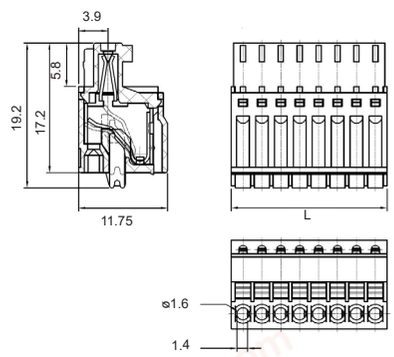

Male header vertical connector

PART NO.	POLES	LENGTH
CTBP93VC/2	2	6.9mm
CTBP93VC/3	3	9.4mm
CTBP93VC/4	4	11.9mm
CTBP93VC/5	5	14.4mm
CTBP93VC/6	6	16.9mm
CTBP93VC/7	7	19.4mm
CTBP93VC/8	8	21.9mm
CTBP93VC/9	9	24.4mm
CTBP93VC/10	10	26.9mm
CTBP93VC/11	11	29.4mm
CTBP93VC/12	12	31.9mm

CTBP93VC

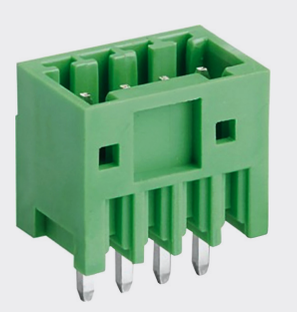

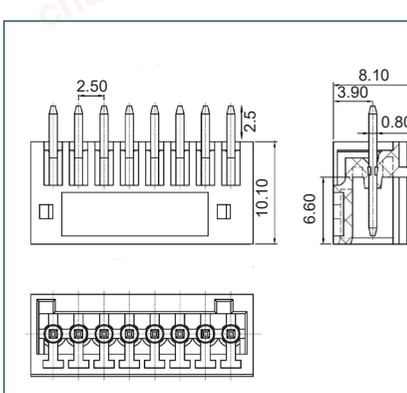

Male header horizontal connector

PART NO.	POLES	LENGTH
CTBP93HC/2	2	6.9mm
CTBP93HC/3	3	9.4mm
CTBP93HC/4	4	11.9mm
CTBP93HC/5	5	14.4mm
CTBP93HC/6	6	16.9mm
CTBP93HC/7	7	19.4mm
CTBP93HC/8	8	21.9mm
CTBP93HC/9	9	24.4mm
CTBP93HC/10	10	26.9mm
CTBP93HC/11	11	29.4mm
CTBP93HC/12	12	31.9mm

CTBP93HC



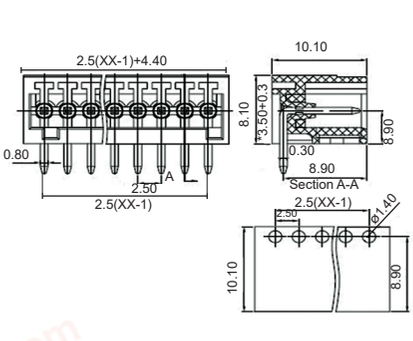

+44 (0)1638 716101 | sales@camdenboss.com | www.camdenboss.com

We operate a constant improvement policy, our products are subject to change without notice.

Vers 2

bsi ISO 9001 Quality Management Systems CERTIFIED FM 28514