chanhvinh.com

5.08mm pitch pluggable screwless terminal blocks

Product overview

- 2-12 pole solid block
- Screwless connectivity
- Moulded in green UL94-V0, flame retardant PA66
- Cable acceptance - 0.08 - 2.08mm² (28-14 AWG) solid and stranded cable
- Compatible with all 5.08 pluggable male headers
- Pluggable female connectors
- Polarised mouldings
- cULus approved

SPECIFICATION	
Rating	UL=10A/300V, IEC=20A/450V
Insulation resistance	500MΩ/500V
Withstand voltage	AC2000V/1min
Contact resistance	20mΩ (max)
Working temperature	-40°C to +105°C
Moulding	UL94-V0, flame retardant PA66
Spring	Stainless steel
Contact	Bronze, Ni plated

PART NO.	POLES	LENGTH
CSTBP9208/2	2	10.8mm
CSTBP9208/3	3	15.8mm
CSTBP9208/4	4	20.9mm
CSTBP9208/5	5	26.0mm
CSTBP9208/6	6	31.1mm
CSTBP9208/7	7	36.2mm
CSTBP9208/8	8	41.2mm
CSTBP9208/9	9	46.3mm
CSTBP9208/10	10	51.4mm
CSTBP9208/11	11	56.5mm
CSTBP9208/12	12	61.6mm

CSTBP9208



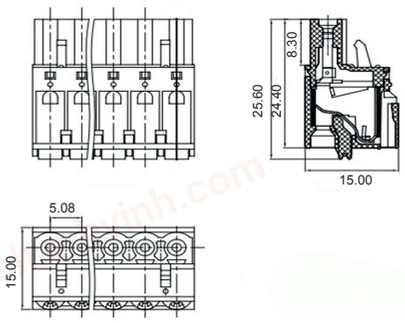

ASSOCIATED PRODUCTS

CSTBP9208 mates with male terminal blocks CTB9308 and CTBP9358 open and closed ended versions.

CTBP9308 - page 66

CTBP9358 - page 66

CTBP9308 AO - page 66

CTBP9358 AO - page 66