chanhvinh.com

268 HANDHELD CASES
292 UNIVERSAL ENCLOSURES
318 HEAVY DUTY AND ELECTRICAL ENCLOSURES
342 DESKTOP AND INSTRUMENT CASES
348 DEVELOPMENT BOARD ENCLOSURES
367 ROOM SENSOR ENCLOSURES
370 CUSTOM SIZED ENCLOSURES

45 series rubber boot enclosures

Product overview

Ergonomically designed range of handheld enclosures, with battery compartment and rubber boot options.

- Moulded in UL94-5VA flame retardant ABS
- Lid retained by four self-tapping screws
- Removable end panel for ease of access and ideal for machining
- ABS end panel version as standard
- Sliding lid battery compartment options for AA or 9V PP3 batteries (contacts/strap included)
- Textured lid versions for consistent all over surface finish
- Smooth recess lid version for membrane keypads or overlays
- PCB pillars moulded in lid and base, screws available to order
- Recess in base for product labels
- 45 series has been designed to meet the requirements of IP54





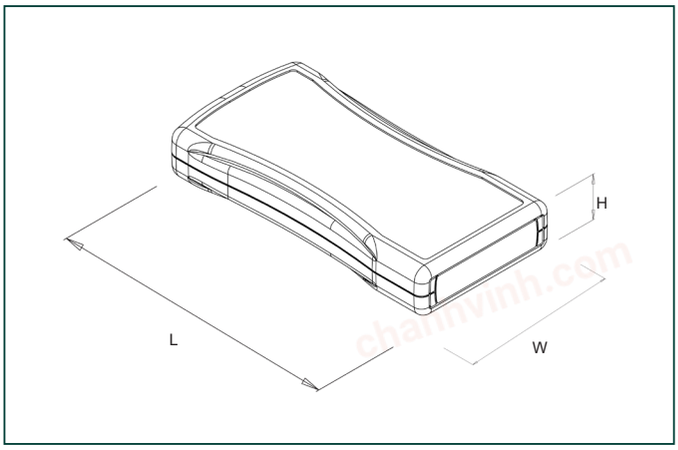

SPECIFICATION	
Materials	Base, lid and end-panel in UL94-5VA ABS
Operating temperature	Resistant to temperatures of up to 80°C
Protection class	45 series has been designed to meet the requirements of IP54
Standard colours	Black as standard Ivory on request
Standard unit includes	Lid, base, end-panel and battery-lid 4x self-tapping screws Battery contacts/strap (+foam pad with 9V)
Options	Rubber boot (various colours)



AA battery compartment

TEXTURED LID	RECESSED LID	SIZE	LENGTH	WIDTH	HEIGHT
CHH451ABK	CHH456ABK	1	117.5mm	72.5mm	25.5mm
CHH452ABK	CHH457ABK	2	139.5mm	82.5mm	26mm
CHH453ABK	CHH458ABK	3	165mm	82.5mm	26mm



9V PP3 battery compartment

TEXTURED LID	RECESSED LID	SIZE	LENGTH	WIDTH	HEIGHT
CHH451PBK	CHH456PBK	1	117.5mm	72.5mm	25.5mm
CHH452PBK	CHH457PBK	2	139.5mm	82.5mm	26mm
CHH453PBK	CHH458PBK	3	165mm	82.5mm	26mm



No battery compartment

TEXTURED LID	RECESSED LID	SIZE	LENGTH	WIDTH	HEIGHT
CHH451NBK	CHH456NBK	1	117.5mm	72.5mm	25.5mm
CHH452NBK	CHH457NBK	2	139.5mm	82.5mm	26mm
CHH453NBK	CHH458NBK	3	165mm	82.5mm	26mm

+44 (0)1638 716101 | sales@camdenboss.com | www.camdenboss.com

We operate a constant improvement policy, our products are subject to change without notice.

Vers 1

bsi ISO 9001 Quality Management Systems CERTIFIED FM 28514

chanhvinh.com

268 HANDHELD CASES
292 UNIVERSAL ENCLOSURES
318 HEAVY DUTY AND ELECTRICAL ENCLOSURES
342 DESKTOP AND INSTRUMENT CASES
348 DEVELOPMENT BOARD ENCLOSURES
367 ROOM SENSOR ENCLOSURES
370 CUSTOM SIZED ENCLOSURES

ACCESSORIES

Silicone rubber boot

- Flexible open faced removable silicone rubber boot
- Fits tightly over base, sides and around edges of lid
- Belt strap incorporated into back, covers battery compartment
- Suitable for any battery compartment, with textured or recessed lid
- Available in all three sizes, in blue, red and black





BLACK	RED	BLUE	SIZE
CHH451BBK	CHH451BRD	CHH451BBL	1
CHH452BBK	CHH452BRD	CHH452BBL	2
CHH453BBK	CHH453BRD	CHH453BBL	3

chanhvinh.com