chanhvinh.com

Call our sales team on 01638 716101 or visit marketing.camdenboss.com/easy-assembly-electronics-enclosures

Easy Assembly Electronics enclosure

Product overview

This UK manufactured universal enclosure has been designed to provide flexibility and increased functionality. A unique, dual action lid and clip-in-points for your PCB, reduces assembly time whilst providing the end user with a premium quality, modern product. Moulded from ABS UL94-V0 material, in a variety of sizes and colours, with optional DIN Rail / wall mount brackets available. If you need an enclosure that can handle generic electronic applications whilst looking good, then look no further!



Key features

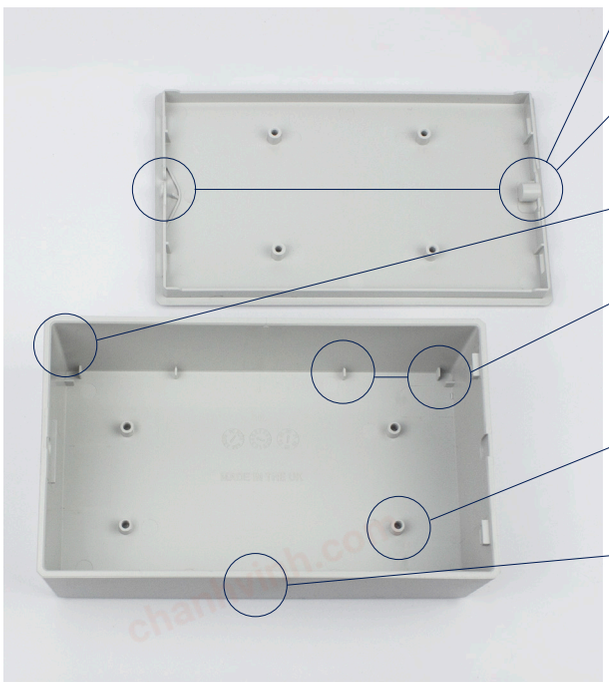

Dual action lid
The dual action lid is held in place with a push-button clip or with a single screw.

Spring feature in lid
Holds the PCB securely in place without the need for screws, greatly improving the assembly time.

No corner pillars
Maximised PCB footprint, providing edge-to-edge capability.

PCB edge corner supports in the base
Sizes 3 & 4 have four additional half board supports which can be removed to make way for solder points on the bottom of the PCB.

Multiple PCB mounting points in base and lid
Central position mounting bosses support edge-to-edge capability. Suitable for 3mm x 6mm screws.

Smooth finish
All sides of the enclosure have been designed to have a smooth finish for ease of customisation and modification.

Raspberry Pi compatible
Sizes 3 & 4 fit Raspberry Pi 3 and 4 and Size 1 fits the Raspberry Pi Zero.

PCB positions

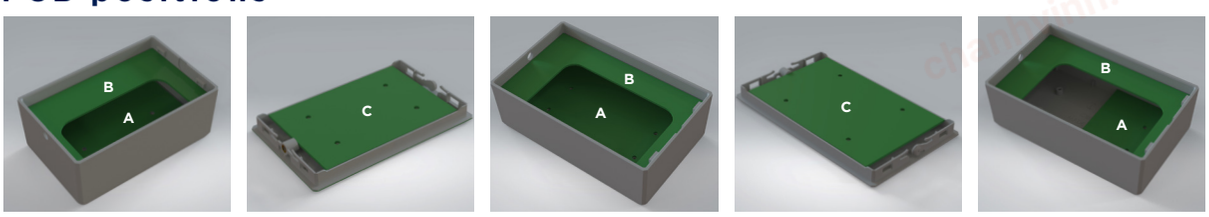

DIMENSIONS FOR EACH ENCLOSURE SIZE

ENCLOSURE SIZE	PCB MOUNTING POSITION			MAX PCB DIMENSIONS	BOARD THICKNESS
SIZE 1	BASE	A	Lower Screw Mounted	82mm x 52mm (end connector) / 80.5mm (side connectors)	Any
		B	Upper Captivated	84mm x 53mm	0.8 to 1.8mm
	LID	C	Four Screw Mounts	68mm x 54mm	Any
SIZE 2	BASE	A	Lower Screw Mounted	101.5mm x 61.5mm (end connector) / 100.5mm (side connector)	Any
		B	Upper Captivated	104mm x 63mm	0.8 to 1.8 mm
	LID	C	Four Screw Mounts	89mm x 61.5mm	Any
SIZE 3	BASE	A	Lower Screw Mounted Full board	121.5mm x 71.5mm (end connector) / 121mm (side connector)	Any
		A	Lower Screw Mounted Half Board	71.5mm x 45.3mm (central pillars) / 60.25mm (off centre pillars)	Any
		B	Upper Captivated	124mm x 73mm	0.8 to 1.8mm
	LID	C	Four Screw Mounts	109mm x 71.5mm	Any
SIZE 4	BASE	A	Lower Screw Mounted Full Board	141mm x 81mm (end connector & side connector)	Any
		A	Lower Screw Mounted Half Board	81mm x 44.8mm (centre pillars) / 70mm (off centre pillars)	Any
		B	Upper Captivated	144mm x 83mm	0.8 to 1.8mm
	LID	C	Four Screw Mounts	129mm x 81mm	Any

chanhvinh.com

Call our sales team on 01638 716101 or visit marketing.camdenboss.com/easy-assembly-electronics-enclosures

Easy Assembly Electronics enclosure



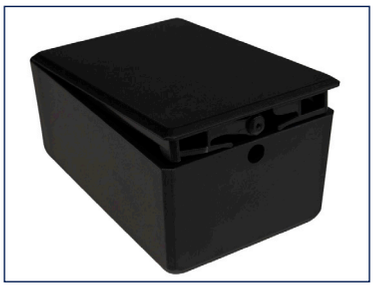



INDIVIDUAL SIZE SPECIFICATION						
ENCLOSURE SIZE	GREY (GY)	BLACK (BK)	WHITE (WH)	EXTERNAL DIMENSIONS (LXWXH)	INTERNAL DIMENSIONS (LXWLH)	WALL THICKNESS
Size 1	CBEAC-01-GY	CBEAC-01-BK	CBEAC-01-WH	90mm x 60mm x 40mm	82mm x 52mm x 36mm	2.5mm
Size 2	CBEAC-02-GY	CBEAC-02-BK	CBEAC-02-WH	110mm x 70mm x 45mm	101.5mm x 61.5mm x 41mm	2.5mm
Size 3	CBEAC-03-GY	CBEAC-03-BK	CBEAC-03-WH	130mm x 80mm x 45mm	121.5mm x 71.5mm x 41mm	2.5mm
Size 4	CBEAC-04-GY	CBEAC-04-BK	CBEAC-04-WH	150mm x 90mm x 50mm	144mm x 83mm x 46mm	2.5mm

RANGE SPECIFICATION				
STANDARD UNIT INCLUDES	Base, lid and one M3 screw (Pozi Pan BZP)			
MATERIALS	Base	UL94-V0 ABS		
	Lid	UL94-V0 ABS/ brass M3 insert		
	Screw	Bright Zinc Plated Steel		
COLOURS	Grey	RAL7047		
	Black	RAL9005		
	White	RAL9003		
COMPLIANCE	RoHS compliant			
IP RATING	IP40			
OPERATING TEMPERATURE	-10°C to 80°C			
TEST RESULTS	Standard	Test	Result	Test report
	EN62262	Impact test	IK06	TR106
	UL94	Flammability	V0	E115797
SCREW TORQUE	M3 screw (Pozi Pan)		0.5Nm	
PURCHASING INFORMATION	Country of origin		Great Britain (GB)	
	Commodity code		39231010	
	Weight		Size 1	619g
			Size 2	849g
			Size 3	1079g
			Size 4	1289g
	Enclosure type		Universal	
OPTIONS	For different colours and materials MOQs will apply			

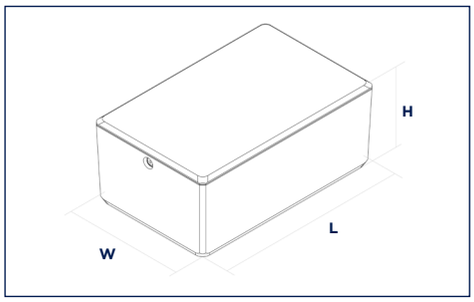

Potential industries / applications

Data logging, fire sensors, solar controllers, DIN Rail electronics, environmental monitoring, desktop instruments, production equipment, solar controllers, IoT equipment, speakers and audible indication and much more...

Customisation options

Digital printing, screen printing, machining / drilling and engraving.

Accessories



DIN Rail Mount Bracket
(CDR-Bracket)



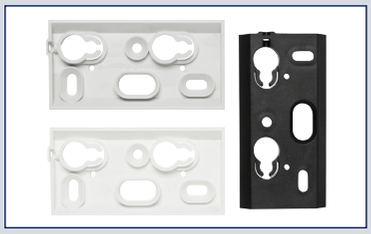

Universal Wall Mount Bracket
(CBWM-10xx)

