chanhvinh.com

Technical Specifications

Typical Connection Diagram

The SSR driver output is allocated to SP1 and wired to switch the load (heater) using an SSR.

F1 Fuse: Time lag type to IEC127. CSA/UL rating 1A 250Vac

F2 Fuse: High Rupture Capacity (HRC) suitable for maximum rated load current

S1 Switch: IEC/CSA/UL approved disconnecting device

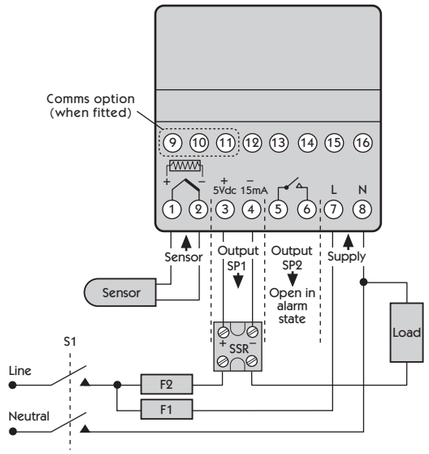

Model 9300 / 9400
(48x48mm) 1/16 DIN

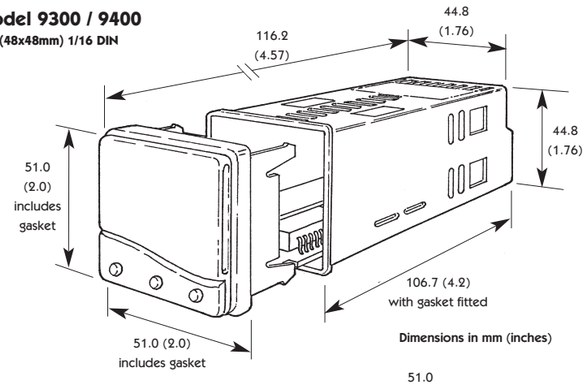

Dimensions in mm (inches)

Model 3300
(48x24mm) 1/32 DIN

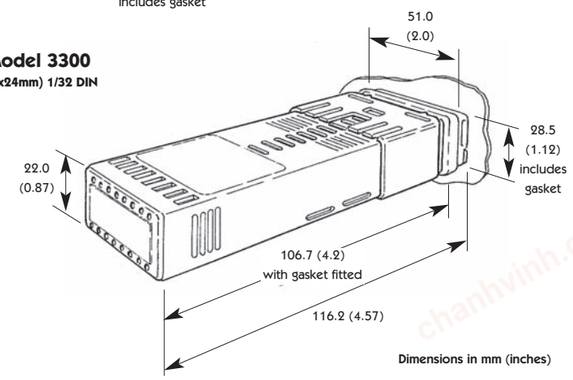

Dimensions in mm (inches)

Ordering information codes 3300, 9300 & 9400

		Code
Model	48 x 24 mm	33
	48 x 48 mm	93
	48 x 48 mm dual display	94
Outputs Reversible	2A SSd / relay	00
	2A relay / 1A relay	11
	SSd / SSd	22
Unused		00
Comms	None fitted	0
	RS232 fitted	2
	RS485 fitted	4
Supply	100–240V AC	0
	12–24V AC/DC	3
Custom code Please refer to CAL for details	Standard code	0

Ordering example 1
Model 3300 48x24mm, SSd/relay, RS485, 12–24V

33	00	00	4	3	0

Ordering example 2
Model 9400 48x48mm dual display, relay/relay, RS232, 100–240 VAC

94	11	00	2	0	0

Codes for additional software and hardware

CALgrafix	10	03	GB	0	0	0
Communications board RS232	3C	00	00	2	0	0
Communications board RS485	3C	00	00	4	0	0
RS232 to RS485 converter	3C	25	00	0	K	3

Notes
Models 3311, 9311, 9400, 9411 and 9422 are not currently available in low voltage 12–24V option.

Your nearest CAL contact;

West Control Solutions
The Hyde Business Park, Brighton BN2 4JU. UK
Tel: + 44 (0) 1273 606271 Fax: + 44 (0)1462 592
email: sales@cal-controls.co.uk
http://www.cal-controls.com

West Control Solutions
1675 North Delany Road, Gurnee, IL 60031. USA
Tel: (800) 866-6659 Fax: (847) 782-5223
email: sales@cal-controls.com
http://www.cal-controls.com

SL000261 33024/4/0109



WEST Control Solutions

The CAL range of Temperature Controllers







CAL Controls

chanhvinh.com

The range of Autotuning P.I.D. Temperature Controllers with RS232/485 Communications and Charting & Logging Software

CAL the pioneer of temperature control

CAL is a dynamic modern company and was the first to develop the 48x48mm ($^1/_{16}$TH DIN) analogue controller in 1976, the first digital controller in 1986, and the first 24x48mm ($^1/_{32}$ND DIN) digital controller in 1992. CAL prides itself on technical competence, customer support and long-term supply of its range of controllers.



Model 9400
48 x 48 mm
($^1/_{16}$TH DIN)



Model 9300
48 x 48 mm
($^1/_{16}$TH DIN)



Model 3300
48 x 24 mm
($^1/_{32}$ND DIN)

CAL's temperature controllers

These controllers are designed for ease of use, low-cost and reliability in demanding applications. They are already widely used in many industrial applications such as plastics, packaging, drying, ovens & furnaces and laboratory & scientific equipment.
CAL's auto-tune makes P.I.D. control simple, just a few button presses will start the controller's self-tune which automatically selects the optimum P.I.D. values. Also CAL's unique dAC function is designed to minimise the overshoot problem associated with conventional P.I.D. control.

Functionality

- Easy-to-use Auto-tune program
- Simple menu-driven programming
- Full P.I.D. operation
- Single ramp/soak (dwell) program
- Heat-cool operation
- IP66 protection
- CE compliant

3-YEAR WARRANTY

Inputs and Outputs

- Thermocouple, PT100 (RTD) & mV
- Two outputs, SSR driver or Relay
- 5-alarm modes, full scale, deviation & band
- RS232 or RS485 (retrofittable)
- MODBUS RTU protocol

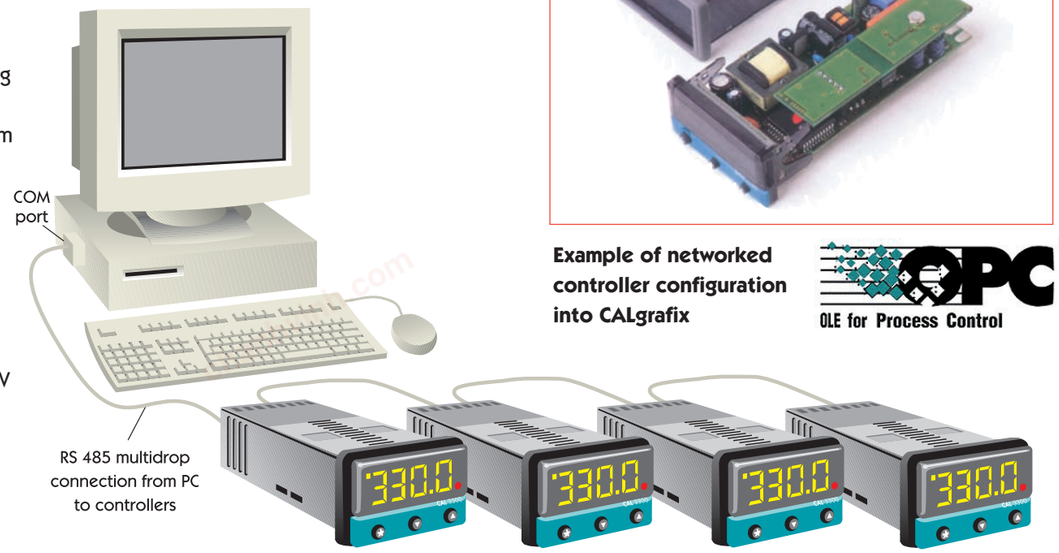

CALgrafix Process Monitoring and Configuration Software

CALgrafix is cost-effective process monitoring and controller configuration software that provides added value to using CAL's range of temperature and process controllers.

Example of networked controller configuration into CALgrafix

OPC™ OLE for Process Control

Functions

- Data-logger with archiving process data
- Chart-recorder for on-screen viewing of trends
- Virtual instrument display
- On-screen alarm displays with audible notification
- A unique drag'n'drop feature for programming 9500P profiles
- 'Cloning' of instrument settings
- Saving of applications for multiple controller set-ups
- Configuration/programming tool for controllers
- OPC client/server architecture

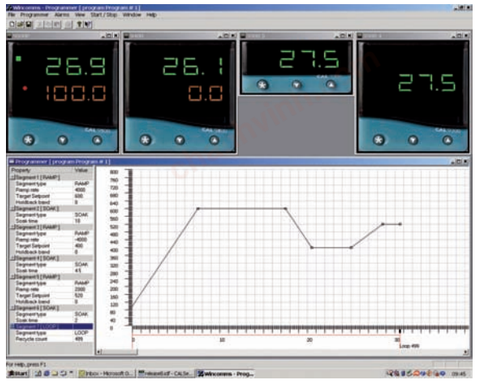

Technical Specifications

Thermocouple	
9 types:	Type B,E,J,K,L,N,R,S,T
Standards:	IPTS/68/DIN 43710
CJC rejection:	20:1 (0.05°/°C) typical
External resistance:	100Ω maximum
Resistance Temperature Detector – (RTD)	
RTD/Pt100	2 wire
Standards:	DIN 43760 (100Ω 0°C/138.5Ω 100°C Pt)
Bulb current:	0.2mA maximum
Linear process inputs	
mV range:	0 to 50mV (0 to 20mV, 4 to 20mV)
Applicable to all inputs (SM = sensor maximum)	
Calibration accuracy:	±0.25%SM ±1°C
Sampling frequency:	input 10Hz, CJC 2 sec
Common mode rejection:	Negligible effect up to 140dB, 240V, 50-60Hz
Series mode rejection:	60dB, 50-60Hz
Temperature coefficient:	150ppm/°C SM
Reference conditions:	22°C ±2°C, rated voltage after 15 minutes settling time
Output devices	**(Maximum 2 outputs)**
SSd:	Solid state relay driver: to switch a remote SSR 5Vdc +0/-15% 15mA non-isolated
Miniature power relay:	Form A/SPST contacts 2A/250 VAC resistive load
2nd relay (option)	Form A/SPST contacts 1A/250 VAC resistive load

General	
Displays:	Main, 4 digits high brightness green LED, 10mm high Lower (9400 only), 4 digits high brightness orange LED, 9mm high LED output indicators – flashing SP1 square green, SP2 round red
Keypad:	3 full travel elastomeric buttons
Environmental	
Safety:	UL 873, EN 61010, CSA 22.2 No. 1010.1-92
Humidity:	Max 80%
Altitude:	up to 2000m
Installation:	Categories II and III
Pollution:	Degree II
Protection:	NEMA 4X, IP66
EMC emission:	EN50081-1, FCC Rules 15 subpart J Class A
EMC immunity:	EN50082-2
Ambient:	0–50°C
Mouldings:	Flame retardant polycarbonate
Dimensions	
Front facia	Models 9300/9400 – 51.0 x 51.0mm (includes gasket) Model 3300 – 51.0 x 28.5 (includes gasket)
Sleeve length	All models – 106.7mm (with gasket fitted)
Instrument Body	Models 9300/9400 – 44.8 x 44.8mm Model 3300 – 44.8 x 22.0mm
Overall length	All models – 116.2mm
Weights	3300–110g; 9300–120g; 9400–130g.

Ideal for:

Recording process data for manufacturing reporting, quality control, health & safety purposes, or OEM system development

Applications:

Food industry, Dairy industry, Carbon fibre, Glass, Rubber & Plastics manufacturing, Ovens, Furnaces, Kilns, Autoclaves, Environmental cabinets, Plastics machines, Laboratory and Scientific equipment, Bottling and beverage production and many other process industries.

Please ask for the applications guide for installing communicating controllers. CAL's technical manuals are available in French, German, Spanish, Swedish, Italian and English, both in printed and Acrobat .pdf formats.

Visit our website for - pdf technical manuals, application notes, CALgrafix demo and much more

www.cal-controls.com