chanhvinh.com

SFH757 and SFH757V

Transmitter for Polymer Optical Fiber Applications

Data Sheet

Lead (Pb) Free
RoHS 6 fully
compliant

BAUART GEPRÜFT
TYPE APPROVED
TÜV Rheinland Product Safety



Description

The SFH757 is a low-cost transmitter diode for optical data transmission with polymer optical fiber. Its InGaAlP LED chip provides enhanced resistance to humidity and is designed to emit light at 650 nm. The robust SFH757 can be used for speeds up to 100 MBd and complements the Avago SFH250 photodiode receiver and SFH551/1-1 integrated photo detector receiver.

The SFH series is optimized for easy coupling. No fiber stripping is required; just insert the cut fiber into the selected SFH component.

SFH757

The transparent plastic package has an aperture where a 2.2 mm fiber end can be inserted. This very easy coupling method is extremely cost-effective.

SFH757V

The V-housing allows easy coupling of unconnectorized 2.2 mm polymer optical fiber with an axial locking screw.

Ordering Information



SFH757

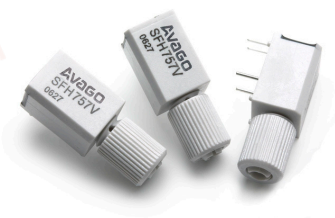

SFH757V

Type	Ordering Code
SFH757	SP000063871
SFH757V	SP000063858

Features

- High speed transmitter for up to 100MBd applications (with peaking circuits)
- 2.2mm aperture holds standard 980/1000/2200µm plastic fibers
- No fiber stripping required
- Molded microlens for efficient coupling

Plastic Direct Fiber Connector housing (V-housing)

- Locking screw attached to the connector
- Interference-free transmission by the light-tight housing
- Transmitter and receiver can be positioned flexibly
- No cross talk
- Auto insertable and wave solderable
- Supplied in tubes

Applications

- Household electronics
- Power electronics
- Optical networks
- Light barriers

Application Literature

AN #	Description
5342	General information about the SFH series with Selection Guide and recommendations regarding System Planning and Mounting
5341	Information about Basic and Special Circuits for Transmitter and Receiver of the SFH series

chanhvinh.com

Package Dimensions

SFH757

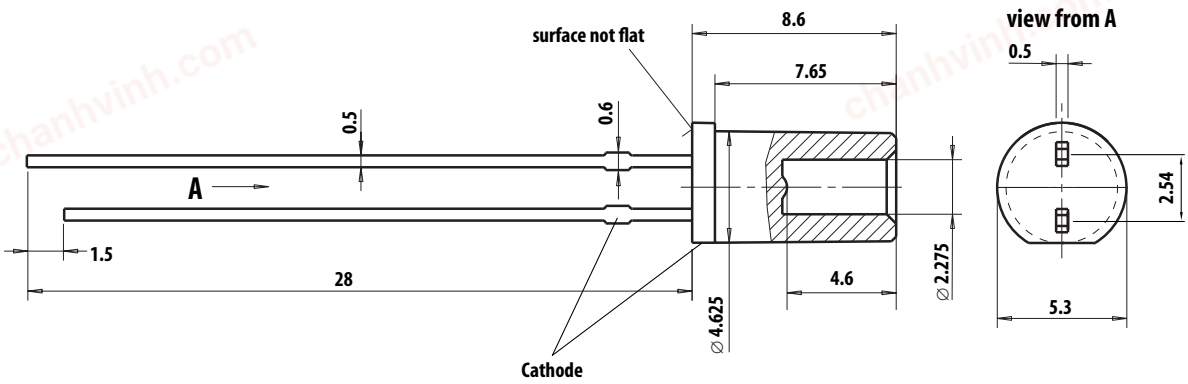

Dimensions in mm

SFH757V

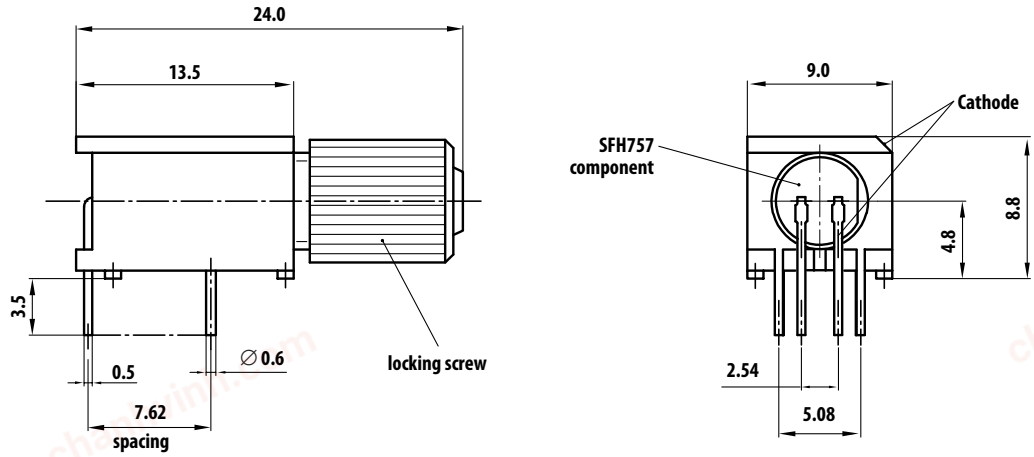

Dimensions in mm

Package V-housing Color

SFH V-series components are color coded just like other Avago fiber optic components. The SFH757V transmitter has a white colored housing; the SFH250V and SFH551/1-1V receiver components have a black colored housing. This prevents mistakes while making connections. Product designation and date of manufacture are printed on the housing.

Package V-housing mounting pins

SFH V-series components have two pins that are electrically isolated from the inner circuit. The pins are only designed for mounting the V-housing to the PCB surface. This helps increase stability, which is needed during fixing the fiber end by the axial locking screw.

The retention force between the soldered mounting pins and the V-housing of the SFH component is about 20 N (with a vertical exertion of force). This is an approximate value.

Package V-housing axial locking screw

Components of the SFH V-series are equipped with an axial locking screw for easy coupling to the unconnectorized 2.2 mm polymer optical fiber. The force that is necessary to pull a jammed fiber out of the V-housing is typically 50 N (with a torque of 15 cNm for tightening the locking screw). This is an approximate value that is very dependent on the fiber and torque combination.

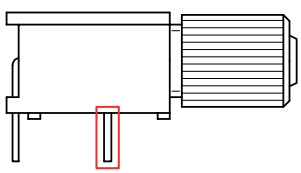

Package V-housing mounting pins

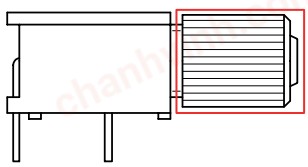

Package V-housing axial locking screw

chanhvinh.com

Technical Data

Absolute Maximum Ratings

Parameter	Symbol	Min	Typ	Max	Unit	Notes	Figure
Operating Temperature range	T_C	-40		+85	°C		
Storage Temperature range	T_{stg}	-40		+100	°C		
Junction Temperature	T_J			+100	°C		
Soldering Temperature (2mm from case bottom, t≤5s)	T_S			+260	°C		
Reverse Voltage	V_R			3	V		
Forward Current	I_F			50	mA		
Power Dissipation	P_{tot}			120	mW		
Thermal Resistance (Junction/Air)	R_{thJA}			450	K/W		1
Electrostatic Discharge Voltage Capability	ESD			2000	V	1	
Electrostatic Discharge Voltage Capability	ESD			400	V	2	

Notes:
1. ESD Capability for all Pins HBM(Human Body Model) according JESD22-A114
2. ESD Capability for all Pins MM (Machine Model) according JESD22-A115

Characteristics (T_A = -40°C to +85°C) unless otherwise specified

Parameter	Symbol	Min	Typ*	Max	Unit	Notes	Figure
Peak Wavelength	λ_{PEAK}	630	650	685	nm		5
Spectral Bandwidth (FWHM)	$\Delta\lambda$		20	30	nm		5
Switching Times (R_ILED = 100Ohm)							
T_rise (10%...90%)	tr		14	20	ns	1,2,4	
T_fall (90%.. 10%)	tf		16	24	ns	1,2,4	
T_rise (10%...90%)	tr			25	ns	1,4	
T_fall (90%.. 10%)	tf			27	ns	1,4	
Capacitance (fmeas = 1MHz; Vf = 0V)	C_S		52		pF		
Forward Voltage (I_{LED_DC} = 50mA)	V_F		2.0	2.6	V	2	4
	V_F			2.7	V		4
Optical Output Power (I_{LED_DC} = 10mA)	P_{OPT}	-10.5	-6.2	-2.5	dBm	2,3,5	3
	P_{OPT}	-12.5		-1.5	dBm	3,5	3

Coefficient	Symbol	Value	Unit	Notes	Figure
Optical Power Temperature Coefficient	T_{POPT}	-0.4	%/K	6,7	
Forward Voltage Temperature Coefficient	T_{VF}	-1.8	mV/K		
Wavelength Temperature Coefficient	T_λ	0.16	nm/K		

* Typical value = mean value at TA = 25°C

Notes:
1. Given switching time values can be reduced by suitable driver circuits. Also an increase of LED-Current leads to a reduction of the switching times.
2. Measured at 25°C
3. The optical output power coupled into a polymere optical fiber (NA=0.5) is measured with a large area detector at the end of a short fiber (about 1m).
4. Driver circuit for the characterization process: see Figure 2 (Vcc=5.0V; installed R_ILED = 100Ohm)
5. $Value_{dBm}$=10*log($Value_{measured}$/1mW)
6. Only valid for a used LED-current in the range of 10mA to 50mA (DC-Current). Optical Power Temperature Coefficient for temperatures between -40°C and 25°C is almost 0%/K.
7. Value for +25°C to +85°C

chanhvinh.com

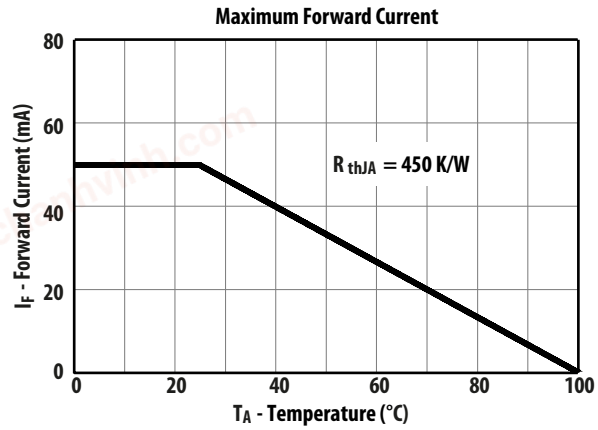

Figure 1. Maximum Forward Current

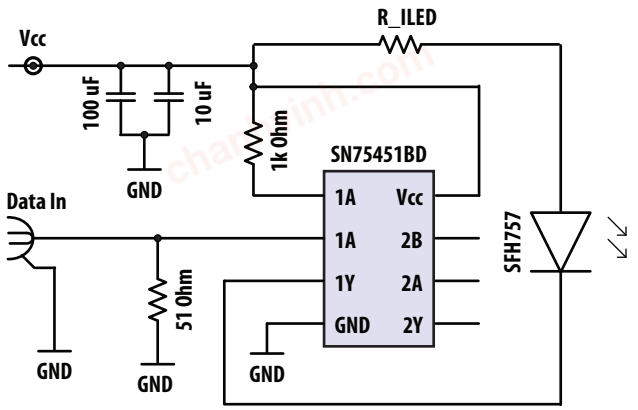

Figure 2. Measurement circuit

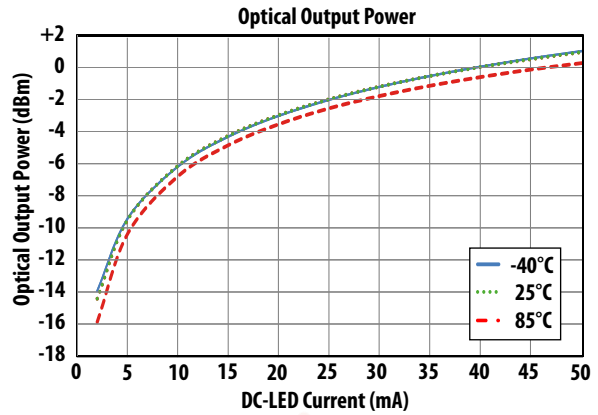

Figure 3. Typical Optical Output Power

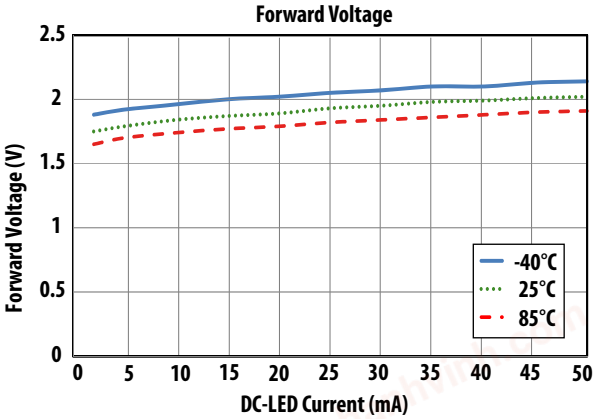

Figure 4. Typical Forward Voltage

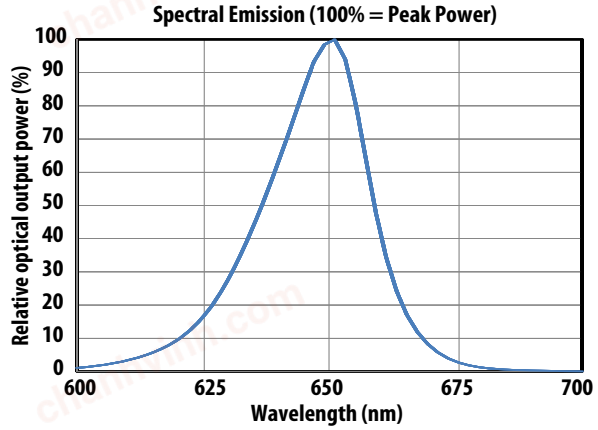

Figure 5. Typical Spectral Emission

For product information and a complete list of distributors, please go to our web site: **www.avagotech.com**

Avago, Avago Technologies, and the A logo are trademarks of Avago Technologies in the United States and other countries.
Data subject to change. Copyright © 2005-2011 Avago Technologies. All rights reserved. Obsoletes AV01-0717EN
AV02-2597EN - December 1, 2011