chanhvinh.com

HEDS-51X0/61X0 Series, HEDG-512X/612X Series HEDM-512X/61XX Series

Two and Three Channel Codewheels
for use with Avago Technologies Optical Encoder Modules

Data Sheet



Description

Avago Technologies offers a wide variety of codewheels for use with Avago Technologies' HEDS-9000, HEDS-9100, HEDS-9040, and HEDS-9140 series Encoder Modules. Designed for many environments, applications, and budgets, Avago Technologies' codewheels are available in Glass, Film, and Metal. These codewheels are available in resolutions from 96 Counts Per Revolution (CPR) to 1024 CPR on an 11 mm optical radius and 500 to 2048 CPR on a 23.36 mm optical radius.

Each of the three codewheel materials offers a certain advantage. Metal codewheels are the most versatile, with a temperature rating up to 100°C, resolution to 512 CPR (28 mm diameter), as well as 2 and 3 channel outputs. Film codewheels offer higher resolution (up to 1024 CPR on a 28 mm diameter) with an operating temperature of 70°C. Glass codewheels combine the best of film and metal, offering a temperature rating of 100°C and resolutions to 1024 CPR on a 28 mm diameter.

In addition, each material offers a specific reliability rating. It is important to consider the specific application operating environment, long term operating conditions, and temperature ranges when choosing a codewheel material.

Also See:

- HEDS-9000/HEDS-9100 Encoder Module Data Sheet
- HEDS-9000/9100/9200 Extended Resolution Encoder Module Data Sheet
- HEDS-9040/9140 Three Channel Encoder Module Data Sheet
- HEDS-9700 Small Encoder Module Data Sheet

Features:

- Codewheels Available in Glass, Film, and Metal
- Available in Two Standard Diameters
- Cost Effective
- Resolutions from 96 CPR to 2048 CPR
- For Use with HEDS-90XX/91XX Series Two and Three Channel Encoders
- Lead Free

chanhvinh.com

Absolute Maximum Ratings

It is important to consider the environment in which the codewheels will be used when selecting a codewheel material. In brief, metal codewheels are rugged, but do not offer higher resolution capabilities. Film codewheels allow higher resolution, but cannot endure the same temperatures and high humidity as metal. Glass codewheels offer both high temperature and higher resolution, but are also more expensive. Consider the following rating table when choosing a codewheel material.

Parameter	Symbol	HEDS-XXXX Metal Codewheels	HEDM-XXXX Film Codewheels	HEDG-XXXX Glass Codewheels
Storage Temperature	T_S	-40°C to +100°C	-40°C to +70°C	-40°C to +100°C
Operating Temperature	T_A	-40°C to +100°C	-40°C to +70°C	-40°C to +100°C
Humidity			non condensing	
Velocity		30,000 RPM	30,000 RPM	12,000 RPM
Shaft Axial Play		±0.25 mm (±0.010 in)	±0.175 mm (±0.007 in)	±0.175 mm (±0.007 in)
Shaft Eccentricity Plus Radial Play		±0.1 mm (±0.004 in) TIR	±0.04 mm (±0.0015 in) TIR	±0.04 mm (±0.0015 in) TIR
Acceleration		250,000 Rad/Sec^2	250,000 Rad/Sec^2	100,000 Rad/Sec^2

Recommended Operating Conditions

Parameter	HEDS-XXXX Metal Codewheels	HEDM-XXXX Film Codewheels	HEDG-XXXX Glass Codewheels
Maximum Count Frequency	100 kHz	200 kHz*	200 kHz
Shaft Perpendicularity Plus Axial Play	±0.25 mm (±0.010 in)	±0.175 mm (±0.007 in)	±0.175 mm (±0.007 in)
Shaft Eccentricity Plus Radial Play	±0.1 mm (±0.004 in) TIR	±0.04 mm (±0.0015 in) TIR	±0.04 mm (±0.0015 in) TIR

Note: Avago Technologies Encoder Modules are guaranteed to 100 kHz, but can operate at higher frequencies. See Encoder Module Data Sheet for specifications and output load recommendations.

*HEDM-6140 is guaranteed to 100 kHz with the HEDS-9040 #T00 module.

chanhvinh.com

Encoding Characteristics

Encoding characteristics over recommended operating range and recommended mounting tolerances unless otherwise specified. Values are for worst error over a full rotation. Please refer to Encoder Module Data Sheet for definitions of Encoding characteristics.

Reliability

In addition to the absolute maximum specifications of codewheels, the environment characteristics of the application are also important. For example, consistent, large temperature swings over the life of the product will affect the codewheel performance characteristics depending on the material. The following reliability table shows results of lifetests under varying conditions of temperature and humidity.

Part Number	Description	Symbol	Min.	Typ.	Max.	Units
HEDS-51XX	Cycle Error	ΔC		3	5.5	°e
	Position Error	Δθ		10	40	min. of arc
HEDS-61XX	Cycle Error	ΔC		3	5.5	°e
	Position Error	Δθ		7	20	min. of arc
HEDM-512X	Cycle Error	ΔC		3	7.5	°e
	Position Error	Δθ		4	40	min. of arc
HEDM-61XX	Cycle Error	ΔC		3	7.5	°e
	Position Error	Δθ		2	20	min. of arc
HEDG-512X	Cycle Error	ΔC		3	7.5	°e
	Position Error	Δθ		4	30	min. of arc
HEDG-612X	Cycle Error	ΔC		3	7.5	°e
	Position Error	Δθ		2	15	min. of arc

Glass Codewheel Tests

Test	Duration	Number of Parts	Number of Failures
Storage at 100°C	1000 hours	44	0
Rotating at 100°C	500 hours	10	0
Temperature Cycle: -40°C to +100°C	500 cycles	98	0
Temperature/Humidity: 85°C/85% R.H.	500 hours	43	0

Film Codewheel Tests

Test	Duration	Number of Parts	Number of Failures
Storage at 70°C	1000 hours	118	0
Rotating at 70°C	500 hours	10	0
Temperature Cycle: -40°C to +70°C	500 cycles	66	0
Temperature Cycle: +20°C to +40°C	1000 cycles	64	0
Temperature Cycle: +20°C to +55°C	1000 cycles	46	0
Temperature Cycle: +20°C to +70°C	500 cycles	50	0

chanhvinh.com

Mounting Rotary Encoders with Codewheels

There are two orientations for mounting the Avago Technologies encoder module and Avago Technologies codewheel. Figure 1a shows mounting the module with side A as the mounting plane. Figure 1b shows mounting the module with side B as the mounting plane. When assembling the encoder and codewheel, it is important to maintain the tolerances of Side A of the module, and the image side of the codewheel. See module Data Sheets for these tolerances.

Mounting with Module Side A as the Mounting Plane

Mounting a high resolution or three channel encoder with Module Side A as the mounting plane requires alignment pins in the motor base. These alignment pins provide the necessary centering of the module with respect to the center of the motor shaft. In addition to centering, the codewheel gap is also important. Please refer to the respective encoder data sheet for necessary mounting information.

Mounting with Module Side B as the Mounting Plane, using Avago Technologies Assembly Tools

Avago Technologies offers centering tools and gap setting tools only for the case when the module is mounted with Side B down. Please refer to the Ordering Information Table to choose the correct assembly tools.

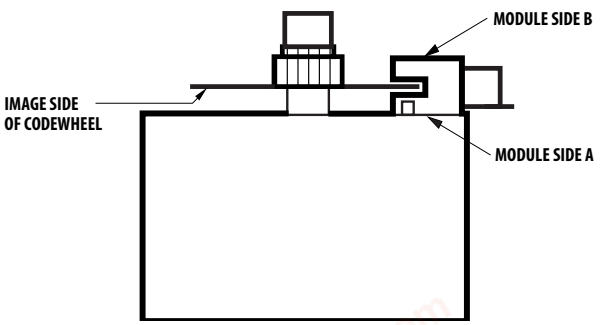

Figure 1a.

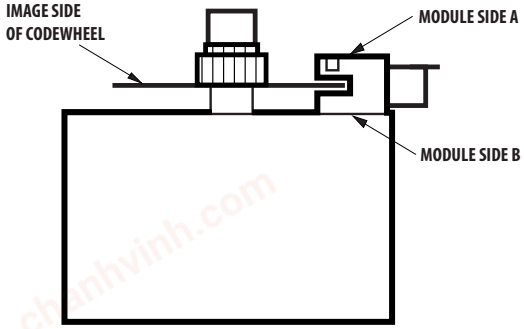

Figure 1b.

*Please note that the image side of the codewheel must always be facing the module Side A.

chanhvinh.com

Assembly Instructions Using Avago Technologies Assembly Tools

Instructions

1. Place codewheel on shaft.
2. Set codewheel height:
   a. Place the correct gap setting tool (per Ordering Information Table) on motor base, flush up against the motor shaft as shown in Figure 2. The shim has two different size steps. Choose the one that most closely matches the width of the codewheel boss. The shim should not contact the codewheel boss.
   b. Push codewheel down against gap setting shim. The codewheel is now at the proper height.
   c. Tighten codewheel setscrew.
3. Insert mounting screws through module and thread into the motor base. Do not tighten screws.
4. Slide the HEDS-8905 or HEDS-8906 centering tool over codewheel hub and onto module as shown in Figure 3. The pins of the alignment tool should fit snugly inside the alignment recesses of the module.
5. While holding alignment tool in place, tighten screws down to secure module.
6. Remove alignment tools.

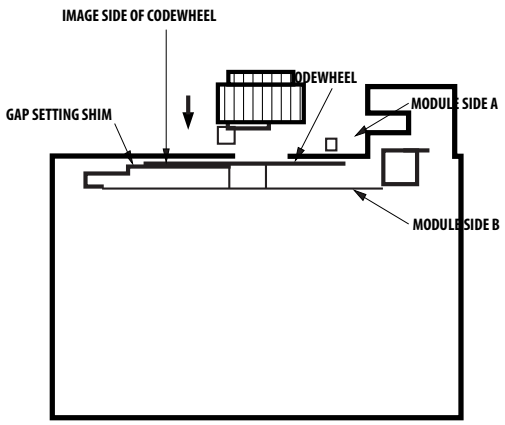

Figure 2. Alignment Tool is Used to Set Height of Codewheel.

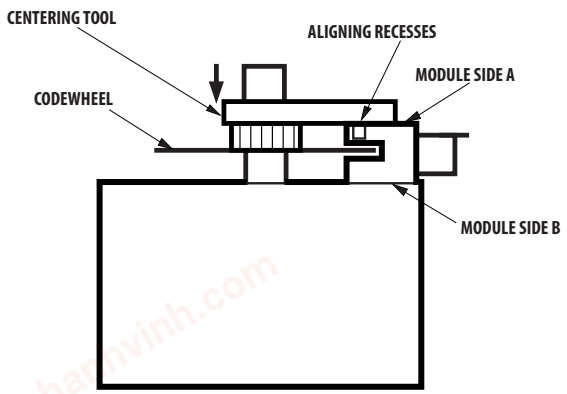

Figure 3. Alignment Tool is Placed over Shaft and onto Codewheel Hub. Alignment Tool Pins Mate with Aligning Recesses on Module.

chanhvinh.com

Mechanical Drawings

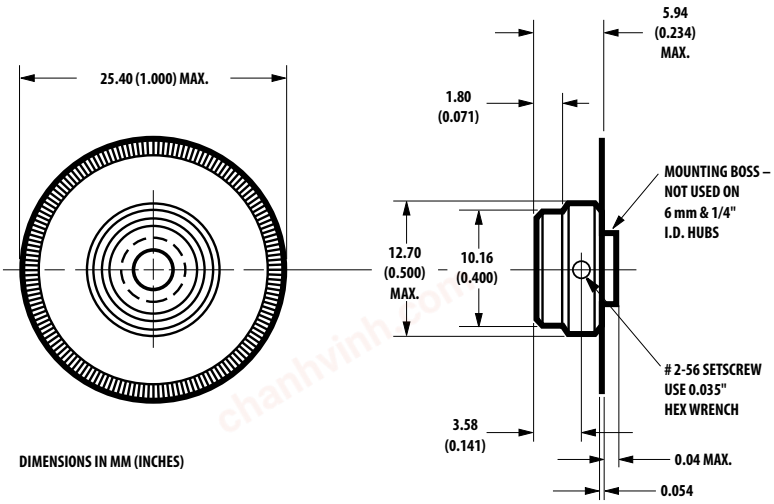

Figure 4. HEDS-5120 Codewheel.

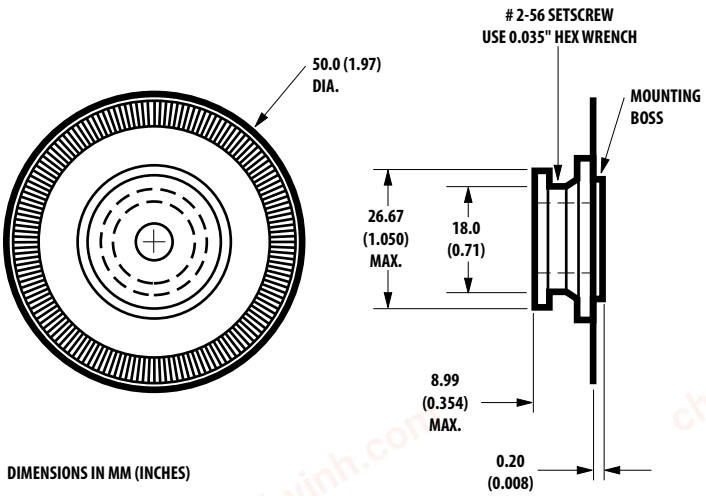

Figure 5. HEDS-6100 Codewheel.

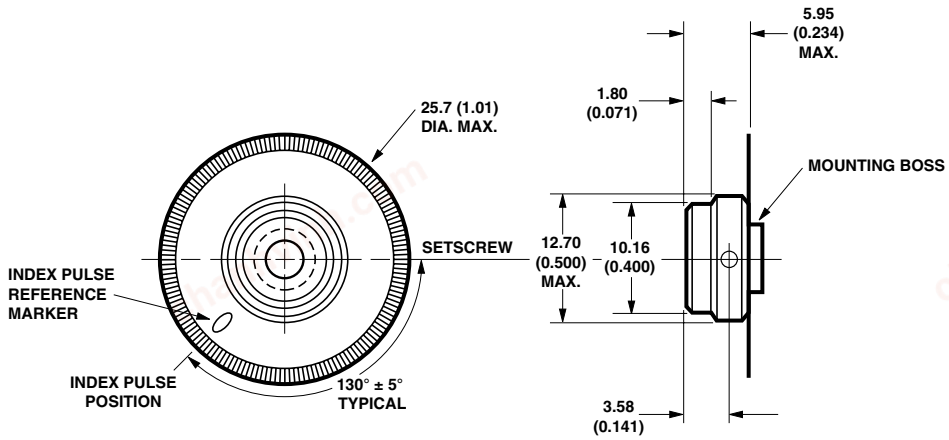

R_{OP} = 11.00 mm (0.433 in.)

DIMENSIONS IN MM (INCHES)

Figure 6. HEDS-5140 Codewheel Used with HEDS-9140.

chanhvinh.com

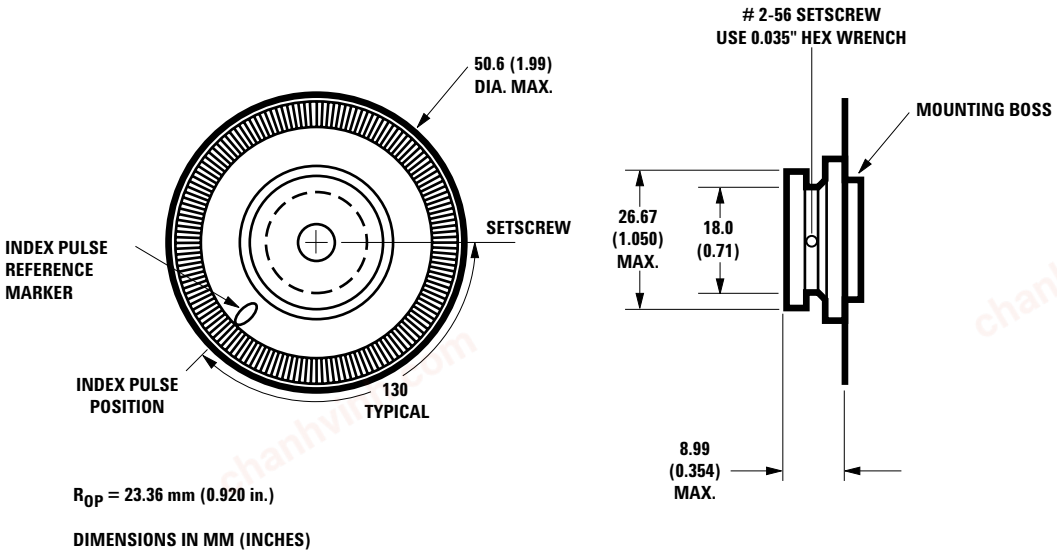

Figure 7. HEDS-6140 Codewheel Used with HEDS-9040.

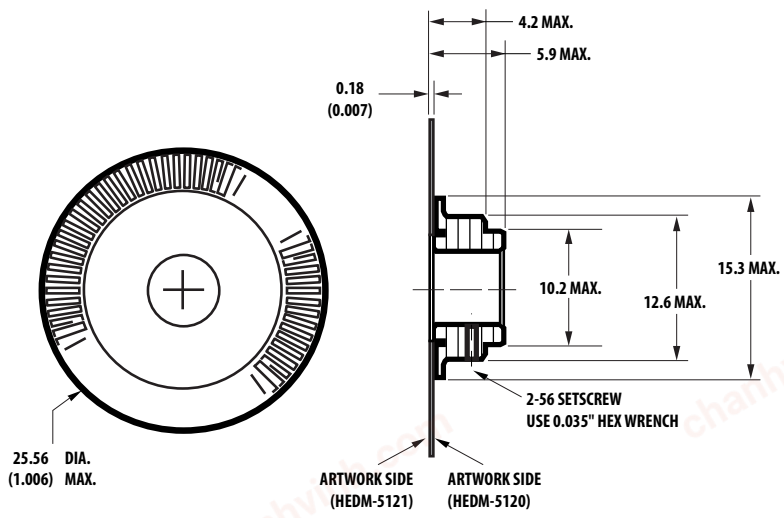

Figure 8. HEDM-5120 Codewheel/HEDM-5121 Codewheel.

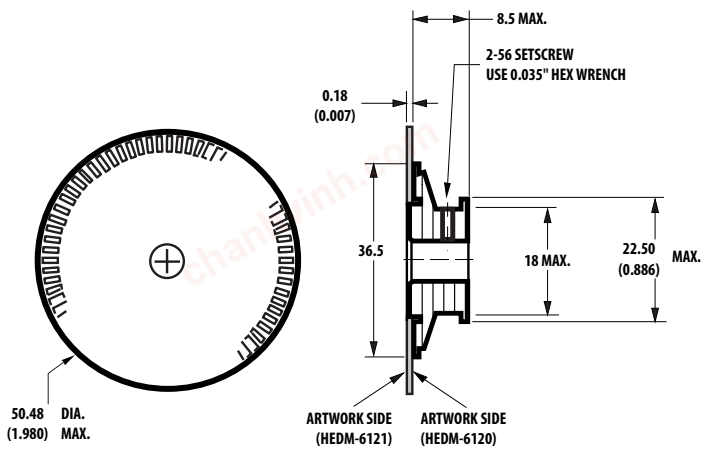

Figure 9. HEDM-6120 Codewheel/HEDM-6121 Codewheel.

chanhvinh.com

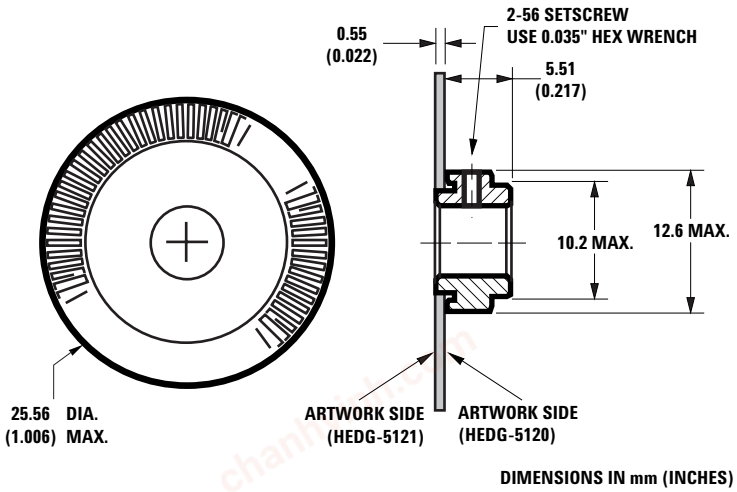

Figure 10. HEDG-5120 Codewheel/HEDG-5121 Codewheel.

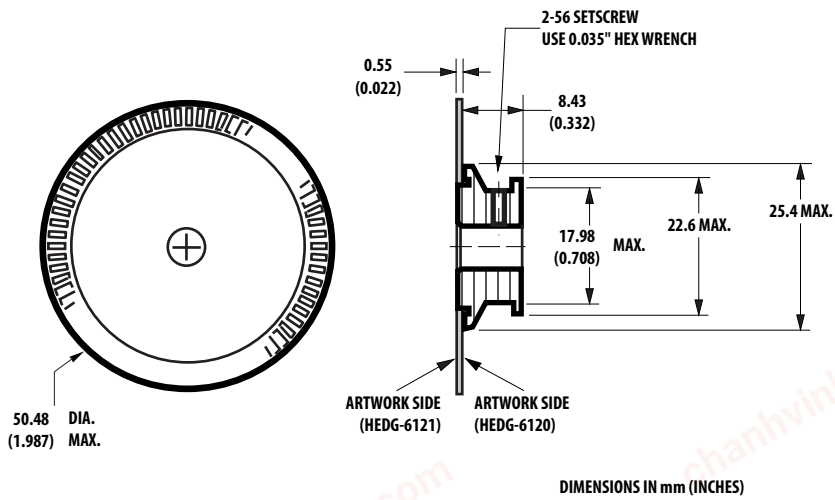

Figure 11. HEDG-6120 Codewheel/HEDG-6121 Codewheel.

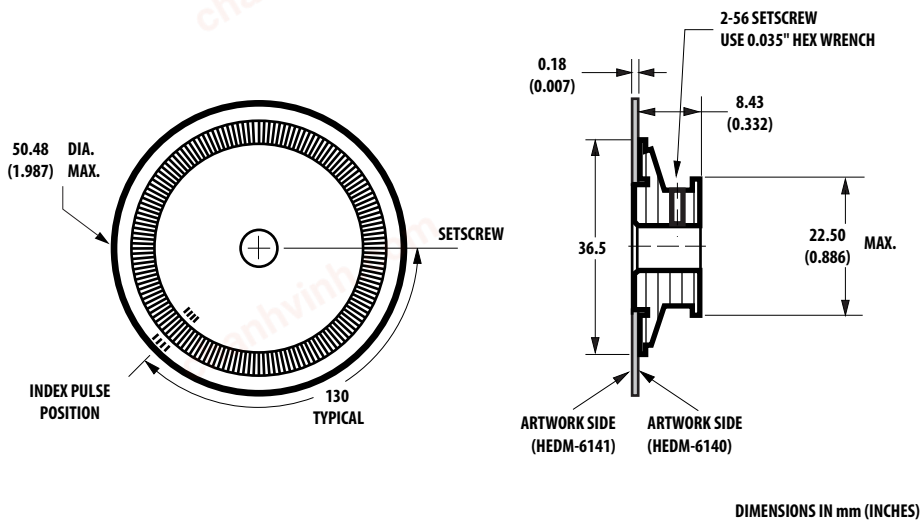

Figure 12. HEDM-6140 Codewheel/HEDM-6141 Codewheel.

chanhvinh.com

Ordering Information Encoder Modules, Codewheel and Assembly Tools

Metal Codewheels

HEDS-9100 Option modules

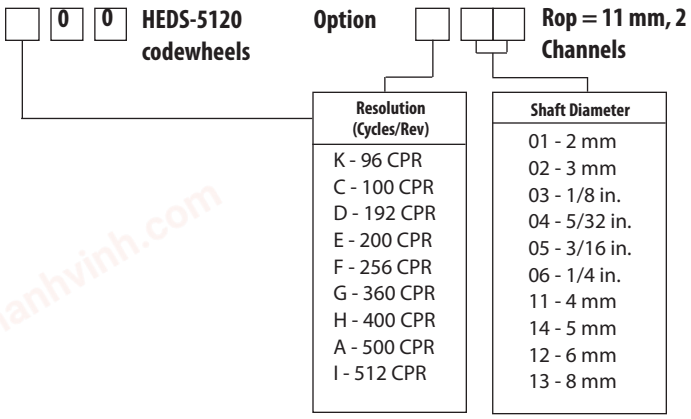

Assembly Tools	
Centering	Gap-Setting
HEDS-8905	HEDS-8901

		01	02	03	04	05	06	08	09	10	11	12	13	14
HEDS-5120#	A	*	*	*	*	*	*				*	*		*
	C		*				*				*	*	*	*
	D					*								
	E						*					*		
	F					*								
	G		*	*		*	*				*			*
	H		*				*				*	*		*
	I		*		*		*				*	*	*	
	K		*										*	

HEDS-9140 Option modules

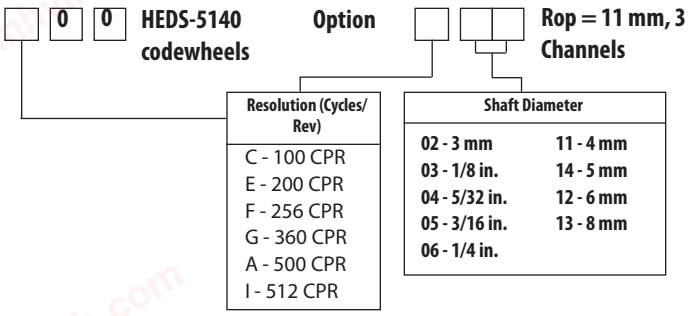

Assembly Tools	
Centering	Gap-Setting
HEDS-8905	HEDS-8905

		01	02	03	04	05	06	08	09	10	11	12	13	14
HEDS-5140	A		*		*	*	*				*	*	*	*
	C				*		*					*	*	
	E						*				*	*		*
	F				*							*		*
	G						*					*		*
	I		*		*		*				*	*	*	*

chanhvinh.com

Ordering Information (Cont'd.)

HEDS-9000 Option modules

□ 0 0 **HEDS-6100 codewheels**

Option □ □□ **Rop = 23 mm, 2 Channels**

Resolution (Cycles/ Rev)
A - 500 CPR
B - 1000 CPR

Shaft Diameter
06 - 1/4 in.
08 - 3/8 in.
09 - 1/2 in.
10 - 5/8 in.
11 - 4 mm
12 - 6 mm
13 - 8 mm

Assembly Tools	
Centering	Gap-Setting
HEDS-8906	HEDS-8901

		01	02	03	04	05	06	08	09	10	11	12	13	14
HEDS-6100#	A								*			*	*	
	B						*	*	*	*				

HEDS-9040 Option modules

□ 0 0 **HEDS-6140 codewheels**

Option □ □□ **Rop = 23.36 mm, 3 Channels**

Resolution (Cycles/ Rev)
B - 1000 CPR
J - 1024 CPR

Shaft Diameter
06 - 1/4 in.
08 - 3/8 in.
09 - 1/2 in.
10 - 5/8 in.
11 - 4 mm
12 - 6 mm
13 - 8 mm

Assembly Tools	
Centering	Gap-Setting
HEDS-8906	HEDS-8906

		01	02	03	04	05	06	08	09	10	11	12	13	14
HEDS-6140#	B						*	*	*	*	*	*	*	
	J						*		*			*	*	

Note:

1. For the lower resolution, two channel encoders, (11 mm ≤ 512 CPR; 23.36 mm ≤ 1024 CPR) the centering tool and gap-setting shim are not necessary, but sometimes helpful in an assembly process.

chanhvinh.com

Ordering Information (Cont'd.)

Film Codewheels

HEDS-9100 modules Option □ 0 0

HEDM-512 codewheels Option □ □□

Rop = 11 mm, 2 Channels

Assembly Tools	
Centering	Gap-Setting
HEDS-8905	HEDS-8901

Resolution (Cycles/Rev)	Artwork Orientation	Shaft Diameter
B - 1000 CPR J - 1024 CPR	0 - Artwork on hub side (use when module side B is down) 1 - Artwork opposite hub side (use when module side A is down)	02 - 3 mm 06 - 1/4 in. 11 - 4 mm 12 - 6 mm

		01	02	03	04	05	06	08	09	10	11	12	13	14
HEDM-5120#	B		*				*				*	*		
	J						*				*			
HEDM-5121	B					*	*							
	J													

HEDS-9000 modules Option □ 0 0

HEDM-612 codewheels Option □ □□

Rop = 23.36 mm, 2 Channels

Assembly Tools	
Centering	Gap-Setting
HEDS-8906	HEDS-8906

Resolution (Cycles/Rev)	Artwork Orientation	Shaft Diameter
T - 2000 CPR U - 2048 CPR	0 - Artwork on hub side (use when module side B is down) 1 - Artwork opposite hub side (use when module side A is down)	06 - 1/4 in. 08 - 3/8 in. 12 - 6 mm 13 - 8 mm

		01	02	03	04	05	06	08	09	10	11	12	13	14
HEDM-6120#	T						*	*				*	*	
	U								*					
HEDM-6121#	T								*					

chanhvinh.com

Ordering Information (Cont'd.)

HEDS-9040 modules
Option 0 0

HEDM-614 codewheels
Option

Rop = 23.36 mm, 3 Channels

Assembly Tools

Centering	Gap-Setting
HEDS-8906	HEDS-8906

Resolution (Cycles/Rev)	Artwork Orientation*	Shaft Diameter
T - 2000 CPR	0 - Artwork on hub side (use when module side B is down) 1 - Artwork opposite hub side (use when module side A is down)	10 - 5/8 in. 12 - 6 mm

		01	02	03	04	05	06	08	09	10	11	12	13	14
HEDM-6140#	T											*		
HEDM-6141#	T									*				

Glass Codewheels

HEDS-9100 modules
Option 0 0

HEDG-512 codewheels
Option

Rop = 11 mm, 2 Channels

Assembly Tools

Centering	Gap-Setting
HEDS-8905	HEDS-8932

Resolution (Cycles/Rev)	Artwork Orientation	Shaft Diameter
B - 1000 CPR J - 1024 CPR	0 - Artwork on hub side (use when module side B is down) 1 - Artwork opposite hub side (use when module side A is down)	06 - 1/4 in. 14 - 5 mm

		01	02	03	04	05	06	08	09	10	11	12	13	14
HEDG-5121#	B						*					*		
	J													*

chanhvinh.com

Ordering Information (Cont'd.)

HEDS-9000 modules
Option

HEDG-612 codewheels
Option

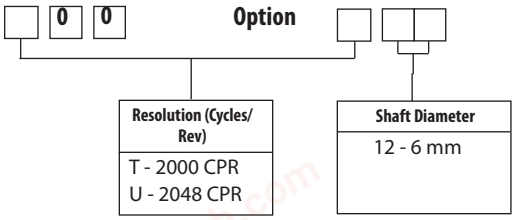

Rop = 23.36 mm, 2 Channels

Assembly Tools

Centering	Gap-Setting
HEDS-8906	HEDS-8932

		01	02	03	04	05	06	08	09	10	11	12	13	14
HEDG-6120#	U											*		

chanhvinh.com

For product information and a complete list of distributors, please go to our web site: **www.avagotech.com**

Avago, Avago Technologies, and the A logo are trademarks of Avago Technologies in the United States and other countries.
Data subject to change. Copyright © 2005-2009 Avago Technologies. All rights reserved. Obsoletes 5989-0866EN
AV02-1450EN - January 21, 2009