chanhvinh.com

HLMP-3707, HLMP-3907, HLMP-3750, HLMP-3850, HLMP-3950, HLMP-3960, HLMP-3390, HLMP-3490, HLMP-3590, HLMP-1340, HLMP-1440, HLMP-1540, HLMP-K640

T-13/4 (5 mm), T-1 (3 mm), Ultra-Bright LED Lamps

Data Sheet



Description

These non-diffused lamps out-perform conventional LED lamps. By utilizing new higher intensity material, we achieve superior product performance.

The HLMP-3750/-3390/-1340 Series Lamps are Gallium Arsenide Phosphide on Gallium Phosphide red light emitting diodes. The HLMP-3850/-3490/-1440 Series are Gallium Arsenide Phosphide on Gallium Phosphide yellow light emitting diodes. The HLMP-3950/3590/3960/1540/K640 Series Lamps are Gallium Phosphide green light emitting diodes.

Features

- Improved brightness
- Improved color performance
- Available in popular T-1 and T-1 3/4 packages
- New sturdy leads
- IC compatible/low current capability
- Reliable and rugged
- Choice of 3 bright colors
  - High Efficiency Red
  - High Brightness Yellow
  - High Performance Green

Applications

- Lighted switches
- Backlighting front panels
- Light pipe sources
- Keyboard indicators

chanhvinh.com

Selection Guide

Package Description	Color	Luminous Intensity Iv (mcd) @ 20mA Device HLMP-	Min.	Typ.	Max.	$2_q1/2$ Degree	Package Outline
T-1 3/4	Red	3707-L00xx	90.2	-	-	24	F
		3750	90.2	125.0	-	24	A
		3750-L00xx	90.2	125.0	-	24	A
	Yellow	3850	96.2	140.0	-	24	A
		3850-K00xx	96.2	140.0	-	24	A
		3850-KL0xx	96.2	150.0	294.0	24	A
	Green	3907-K00xx	111.7	-	-	24	F
		3914-K00xx	111.7	-	-	24	D
		3950	111.7	265.0	-	24	A
		3950-K00xx	111.7	265.0	-	24	A
		3950-LM0xx	170.0	300.0	490.0	24	A
		3960-K0xxx	111.7	265.0	-	24	E
T-1 3/4 Low Profile	Red	3390	35.2	55.0	-	32	B
	Yellow	3490	37.6	55.0	-	32	B
	Green	3590	43.6	55.0	-	32	B
T-1	Red	1340	35.2	55.0	-	45	C
		1340-H00xx	13.8	-	-	45	C
		1340-J00xx	35.2	55.0	-	45	C
	Yellow	1440	23.5	45.0	-	45	C
		1440-H00xx	23.5	45.0	-	45	C
	Green	1540	27.3	45.0	-	45	C
		1540-H00xx	27.3	45.0	-	45	C
		1540-IJ0xx	43.6	60.0	139.6	45	C
	Emerald Green	K640	4.2	21.0	-	45	C
		K640-FGNxx	10.6	20.0	34.0	45	C

chanhvinh.com

Package Dimensions

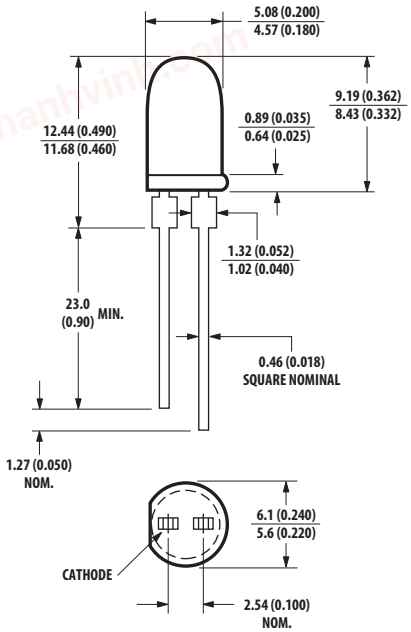

PACKAGE OUTLINE "A"
HLMP-3750/3850/3950

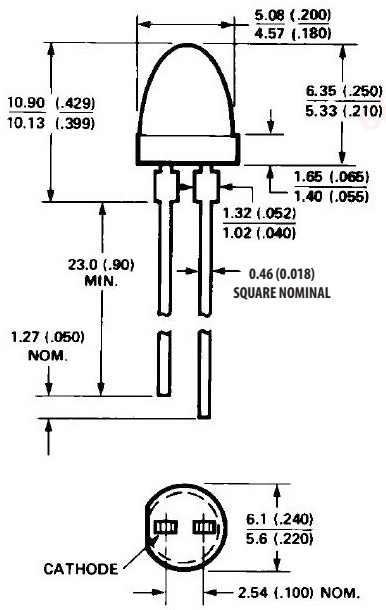

PACKAGE OUTLINE "B"
HLMP-3390/3490/3590

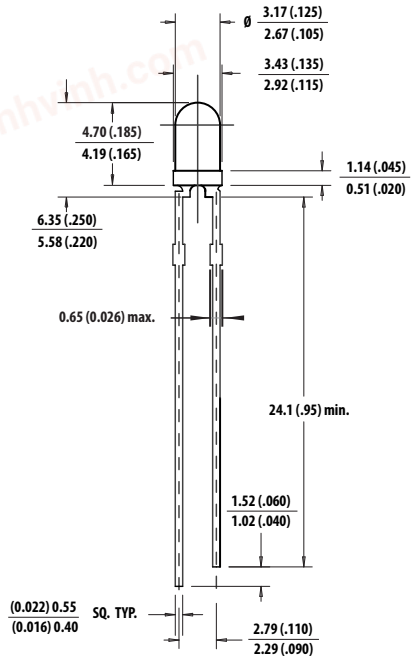

PACKAGE OUTLINE "C"
HLMP-1340/1440/1540

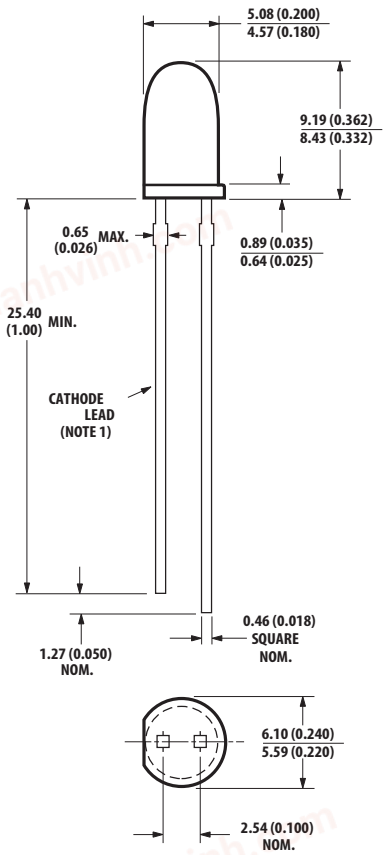

PACKAGE OUTLINE "D"
HLMP-3914

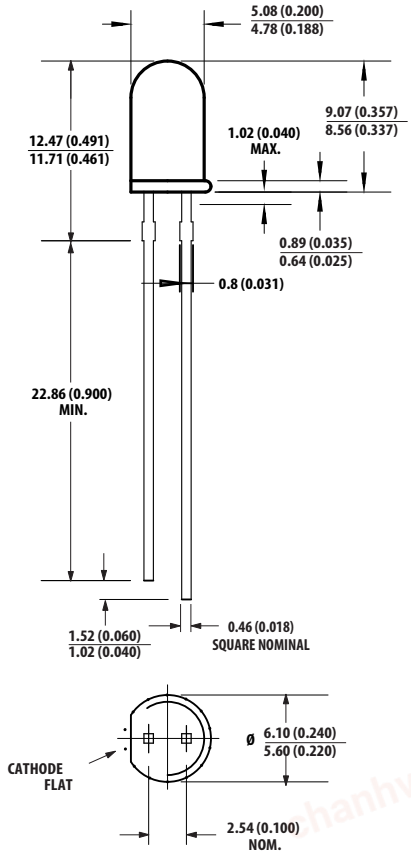

PACKAGE OUTLINE "E"
HLMP-3960

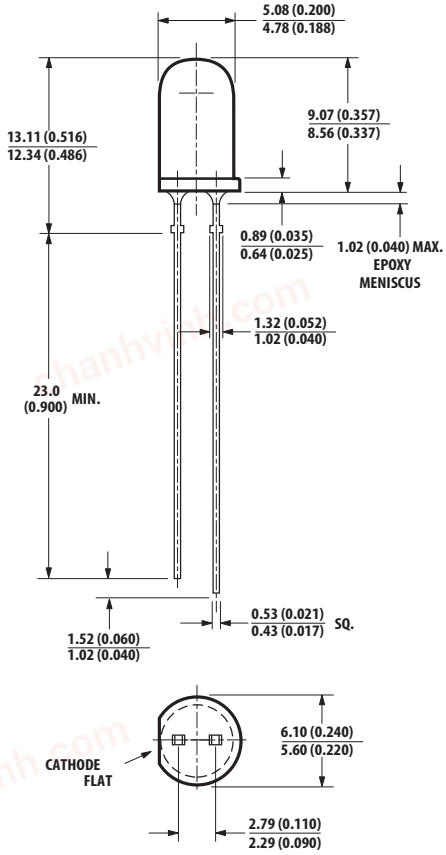

PACKAGE OUTLINE "F"
HLMP-3707/3907

Notes:
1. All dimensions are in millimeters (inches).
2. An epoxy meniscus may extend about 1 mm (0.40") down the leads.
3. For PCB hole recommendations, see the Precautions section.

chanhvinh.com

Part Numbering System

HLMP - x x xx - x x x xx

Mechanical Options
00: Bulk
01: Tape & Reel, Crimped Leads
02, Bx: Tape & Reel, Straight Leads
A1, B1: Right Angle Housing, Uneven Leads
A2, B2: Right Angle Housing, Even Leads
Dx, Ex: Ammo Pack, Straight Leads
FH: 2 Iv Bin Select with Inventory Control
Vx: Ammo Pack, Crimped Leads

Color Bin Options
0: Full Color Bin Distribution
N: Color Bin 6 & 7 Only

Maximum Iv Bin Options
0: Open (No. Max. Limit)
Others: Please Refer to the Iv Bin Table

Minimum Iv Bin Options
Please Refer to the Iv Bin Table

Color Options
3, 7: GaP HER
4, 8: GaP Yellow (except K4xx series)
5, 9: GaP Green
6: GaP Emerald Green

Package Option
1, K: T-1 (3 mm)
3: T-1 3/4 (5 mm)

Absolute Maximum Ratings at $T_A = 25°C$

Parameter	Red	Yellow	Green/Emerald Green	Units
Peak Forward Current	90	60	90	mA
Average Forward Current[1]	25	20	25	mA
DC Current[2]	30	20	30	mA
Transient Forward Current[3] (10 µs Pulse)	500	500	500	mA
Reverse Voltage (I_R = 100 µA)	5	5	5	V
LED Junction Temperature	110	110	110	°C
Operating Temperature Range	-40 to +100	-40 to +100	-20 to +100	°C
Storage Temperature Range	-40 to +100	-40 to +100	-40 to +100	°C

Notes:
1. See Figure 2 to establish pulsed operating conditions.
2. For Red and Green series derate linearly from 50°C at 0.5 mA/°C. For Yellow series derate linearly from 50°C at 0.2 mA/°C.
3. The transient peak current is the maximum non-recurring peak current the devices can withstand without damaging the LED die and wire bonds. It is not recommended that the device be operated at peak currents beyond the Absolute Maximum Peak Forward Current.

chanhvinh.com

Electrical/Optical Characteristics at $T_A = 25°C$

Symbol	Description	T-1 3/4	T-1 3/4 Low Dome	T-1	Min.	Typ.	Max.	Units	Test Conditions
λ_{PEAK}	Peak Wavelength	37xx 38xx 39xx	3390 3490 3590	1340 1440 1540 K640		635 583 565 558		nm	Measurement at Peak
λ_d	Dominant Wavelength	37xx 38xx 39xx	3390 3490 3590	1340 1440 1540 K640		626 585 569 560		nm	Note 1
$\Delta\lambda 3/4$	Spectral Line Halfwidth	37xx 38xx 39xx	3390 3490 3590	1340 1440 1540 K640		40 36 28 24		nm	
τ_s	Speed of Respond	37xx 38xx 39xx	3390 3490 3590	1340 1440 1540 K640		90 90 500 3100		ns	
C	Capacitance	37xx 38xx 39xx	3390 3490 3590	1340 1440 1540 K640		11 15 18 35		pF	$V_F = 0$, f = 1 MHz
$R\theta_{J\text{-}PIN}$	Thermal Resistance	37xx 38xx 39xx	3390 3490 3590	 1340 1440 1540 K640		210 210 210 510 290 290 290 290		°C/W	Junction to Cathode Lead
V_F	Forward Voltage	37xx 38xx 39xx	3390 3490 3590	1340 1440 1540 K640	1.5 1.5 1.5	1.9 2.1 2.2 2.2	2.6 2.6 3.0 3.0	V	$I_F = 20$ mA (Figure 3)
V_R	Reverse Breakdown Voltage	37xx 38xx 39xx	3390 3490 3590	1340 1440 1540 K640	5.0			V	$I_F = 100$ µA
η_v	Luminous Efficacy	37xx 38xx 39xx	3390 3490 3590	1340 1440 1540 K640		145 500 595 655		lumens / watt	Note 2

Notes:
1. The dominant wavelength, λd, is derived from the CIE chromaticity diagram and represents the single wavelength which defines the color of the device.
2. The radiant intensity, Ie, in watts per steradian, may be found from the equation Ie = IV/η_V , where IV is the luminous intensity in candelas and η_V is the luminous efficacy in lumens/watt.

chanhvinh.com

Red, Yellow, and Green

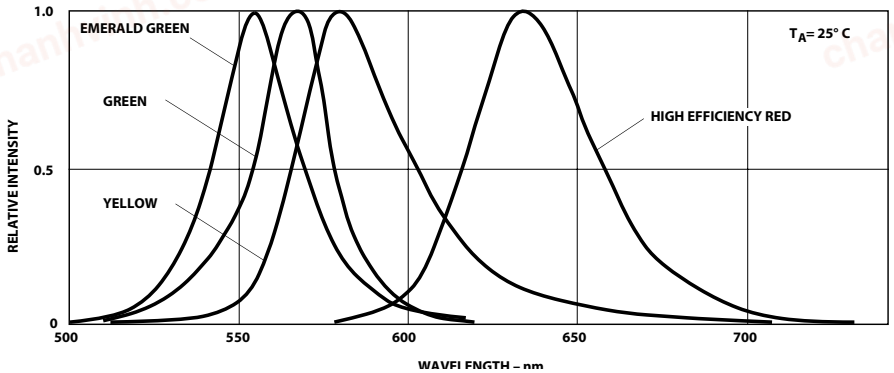

Figure 1. Relative intensity vs. wavelength.

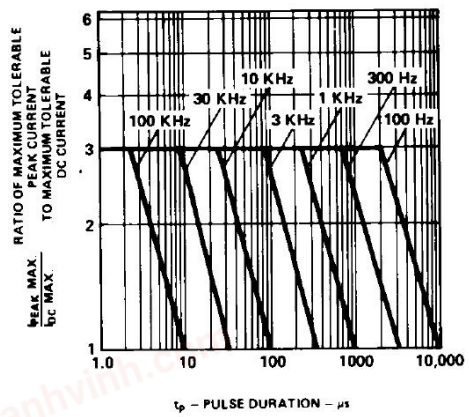

Figure 2. Maximum tolerable peak current vs. pulse duration. (I_{DC} MAX as per MAX ratings).

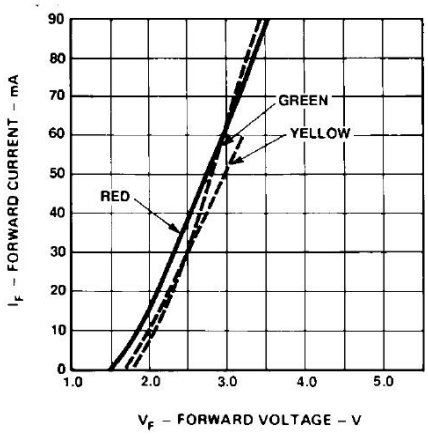

Figure 3. Forward current vs. forward voltage.

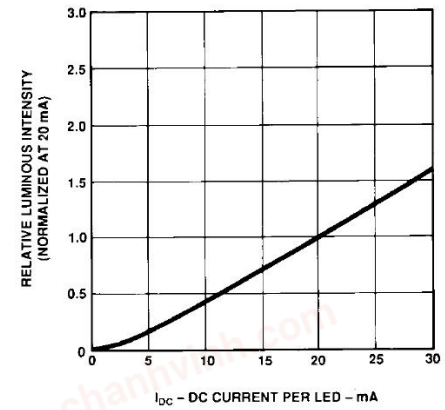

Figure 4. Relative luminous intensity vs. forward current.

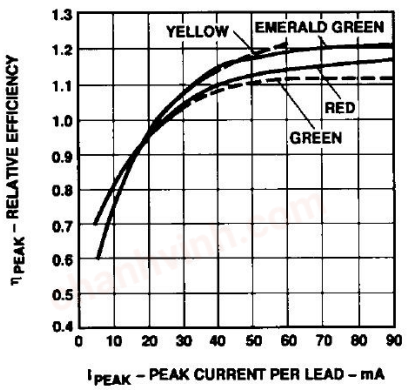

Figure 5. Relative efficiency (luminous intensity per unit current) vs. peak current.

chanhvinh.com

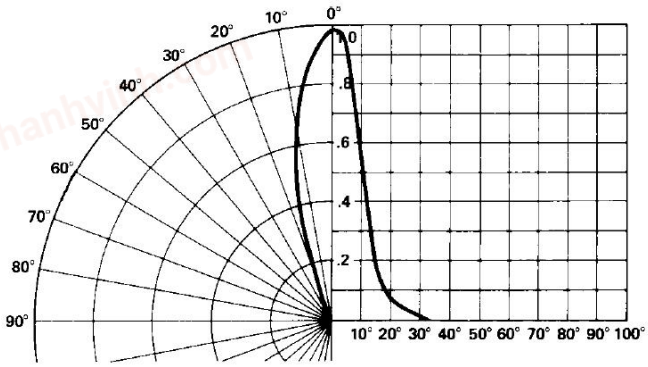

Figure 6. Relative luminous intensity vs. angular displacement. T-1 3/4 lamp.

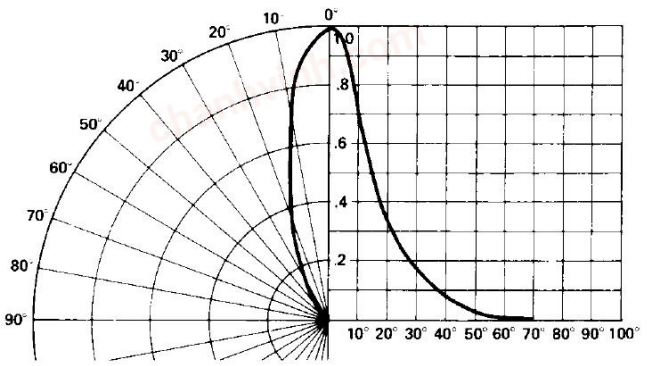

Figure 7. Relative luminous intensity vs. angular displacement. T-1 3/4 low profile lamp.

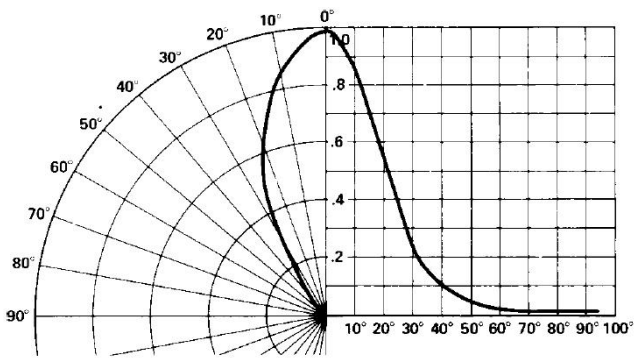

Figure 8. Relative luminous intensity vs. angular displacement. T-1 lamp.

Intensity Bin Limits

		Intensity Range (mcd)	
Color	**Bin**	**Min.**	**Max.**
Red	G	9.7	15.5
	H	15.5	24.8
	I	24.8	39.6
	J	39.6	63.4
	K	63.4	101.5
	L	101.5	162.4
	M	162.4	234.6
	N	234.6	340.0
	O	340.0	540.0
	P	540.0	850.0
	Q	850.0	1200.0
	R	1200.0	1700.0
	S	1700.0	2400.0
	T	2400.0	3400.0
	U	3400.0	4900.0
	V	4900.0	7100.0
	W	7100.0	10200.0
	X	10200.0	14800.0
	Y	14800.0	21400.0
	Z	21400.0	30900.0

Maximum tolerance for each bin limit is ±18%.

chanhvinh.com

Intensity Bin Limits (continued)

Color	Bin	Intensity Range (mcd) Min.	Max.
Yellow	F	10.3	16.6
	G	16.6	26.5
	H	26.5	42.3
	I	42.3	67.7
	J	67.7	108.2
	K	108.2	173.2
	L	173.2	250.0
	M	250.0	360.0
	N	360.0	510.0
	O	510.0	800.0
	P	800.0	1250.0
	Q	1250.0	1800.0
	R	1800.0	2900.0
	S	2900.0	4700.0
	T	4700.0	7200.0
	U	7200.0	11700.0
	V	11700.0	18000.0
	W	18000.0	27000.0
Green/ Emerald Green	A	1.1	1.8
	B	1.8	2.9
	C	2.9	4.7
	D	4.7	7.6
	E	7.6	12.0
	F	12.0	19.1
	G	19.1	30.7
	H	30.7	49.1
	I	49.1	78.5
	J	78.5	125.7
	K	125.7	201.1
	L	201.1	289.0
	M	289.0	417.0
	N	417.0	680.0
	O	680.0	1100.0
	P	1100.0	1800.0
	Q	1800.0	2700.0
	R	2700.0	4300.0
	S	4300.0	6800.0
	T	6800.0	10800.0
	U	10800.0	16000.0
	V	16000.0	25000.0
	W	25000.0	40000.0

Maximum tolerance for each bin limit is ±18%.

Color Categories

Color	Cat #	Lambda (nm) Min.	Max.
Emerald Green	9	552.5	555.5
	8	555.5	558.5
	7	558.5	561.5
	6	561.5	564.5
Green	6	561.5	564.5
	5	564.5	567.5
	4	567.5	570.5
	3	570.5	573.5
	2	573.5	576.5
Yellow	1	582.0	584.5
	3	584.5	587.0
	2	587.0	589.5
	4	589.5	592.0
	5	592.0	593.0
Orange	1	597.0	599.5
	2	599.5	602.0
	3	602.0	604.5
	4	604.5	607.5
	5	607.5	610.5
	6	610.5	613.5
	7	613.5	616.5
	8	616.5	619.5

Maximum tolerance for each bin limit is ±0.5 nm.

chanhvinh.com

Mechanical Option Matrix

Mechanical Option Code	Definition
00	Bulk Packaging, minimum increment 500 pcs/bag
01	Tape & Reel, crimped leads, min. increment 1300 pcs/bag for T-1 3/4, 1800 pcs/bag for T-1
02	Tape & Reel, straight leads, min. increment 1300 pcs/bag for T-1 3/4, 1800 pcs/bag for T-1
A1	T-1, Right Angle Housing, uneven leads, minimum increment 500 pcs/bag
A2	T-1, Right Angle Housing, even leads, minimum increment 500 psc/bag
B1	T-1 3/4, Right Angle Housing, uneven leads, minimum increment 500 pcs/bag
B2	T-1 3/4, Right Angle Housing, even leads, minimum increment 500 psc/bag
BJ	T-1, Tape & Reel, straight leads, minimum increment 2000 pcs/bag
EG	Ammo Pack, straight leads in 5 K increment
FH	Devices that require inventory control and 2 I_V bin select
VR	Ammo Pack, crimped leads, min. increment 2 k for T-1 3/4 and T-1

Note:
All categories are established for classification of products. Products may not be available in all categories. Please contact your local Avago representative for further clarification/information.

chanhvinh.com

chanhvinh.com

Precautions:

Lead Forming:

- The leads of an LED lamp may be preformed or cut to length prior to insertion and soldering on PC board.
- For better control, it is recommended to use proper tool to precisely form and cut the leads to applicable length rather than doing it manually.
- If manual lead cutting is necessary, cut the leads after the soldering process. The solder connection forms a mechanical ground which prevents mechanical stress due to lead cutting from traveling into LED package. This is highly recommended for hand solder operation, as the excess lead length also acts as small heat sink.

Soldering and Handling:

- Care must be taken during PCB assembly and soldering process to prevent damage to the LED component.
- LED component may be effectively hand soldered to PCB. However, it is only recommended under unavoidable circumstances such as rework. The closest manual soldering distance of the soldering heat source (soldering iron's tip) to the body is 1.59mm. Soldering the LED using soldering iron tip closer than 1.59mm might damage the LED.

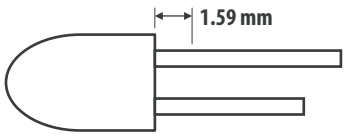

- ESD precaution must be properly applied on the soldering station and personnel to prevent ESD damage to the LED component that is ESD sensitive. Do refer to Avago application note AN 1142 for details. The soldering iron used should have grounded tip to ensure electrostatic charge is properly grounded.
- Recommended soldering condition:

	Wave Soldering[1],[2]	Manual Solder Dipping
Pre-heat Temperature	105°C Max.	–
Pre-heat Time	60 sec Max.	–
Peak Temperature	250°C Max.	260°C Max.
Dwell Time	3 sec Max.	5 sec Max.

Note:
1. Above conditions refers to measurement with thermocouple mounted at the bottom of PCB.
2. It is recommended to use only bottom preheaters in order to reduce thermal stress experienced by LED.

- Wave soldering parameters must be set and maintained according to the recommended temperature and dwell time. Customer is advised to perform daily check on the soldering profile to ensure that it is always conforming to recommended soldering conditions.

Note:
1. PCB with different size and design (component density) will have different heat mass (heat capacity). This might cause a change in temperature experienced by the board if same wave soldering setting is used. So, it is recommended to re-calibrate the soldering profile again before loading a new type of PCB.
2. Customer is advised to take extra precaution during wave soldering to ensure that the maximum wave temperature does not exceed 250°C and the solder contact time does not exceeding 3sec. Over-stressing the LED during soldering process might cause premature failure to the LED due to delamination.

- Any alignment fixture that is being applied during wave soldering should be loosely fitted and should not apply weight or force on LED. Non metal material is recommended as it will absorb less heat during wave soldering process.
- At elevated temperature, LED is more susceptible to mechanical stress. Therefore, PCB must allowed to cool down to room temperature prior to handling, which includes removal of alignment fixture or pallet.
- If PCB board contains both through hole (TH) LED and other surface mount components, it is recommended that surface mount components be soldered on the top side of the PCB. If surface mount need to be on the bottom side, these components should be soldered using reflow soldering prior to insertion the TH LED.
- Recommended PC board plated through holes (PTH) size for LED component leads:

	LED Component Lead Size	Diagonal	Plated Through-Hole Diameter
Lead size (typ.)	0.45 × 0.45 mm (0.018 × 0.018 in.)	0.636 mm (0.025 in)	0.98 to 1.08 mm (0.039 to 0.043 in)
Dambar shear-off area (max.)	0.65 mm (0.026 in)	0.919 mm (0.036 in)	
Lead size (typ.)	0.50 × 0.50 mm (0.020 × 0.020 in.)	0.707 mm (0.028 in)	1.05 to 1.15 mm (0.041 to 0.045 in)
Dambar shear-off area (max.)	0.70 mm (0.028 in)	0.99 mm (0.039 in)	

- Over-sizing the PTH can lead to twisted LED after clinching. On the other hand under sizing the PTH can cause difficulty inserting the TH LED.

Refer to application note AN5334 for more information about soldering and handling of TH LED lamps.

chanhvinh.com

Example of Wave Soldering Temperature Profile for TH LED

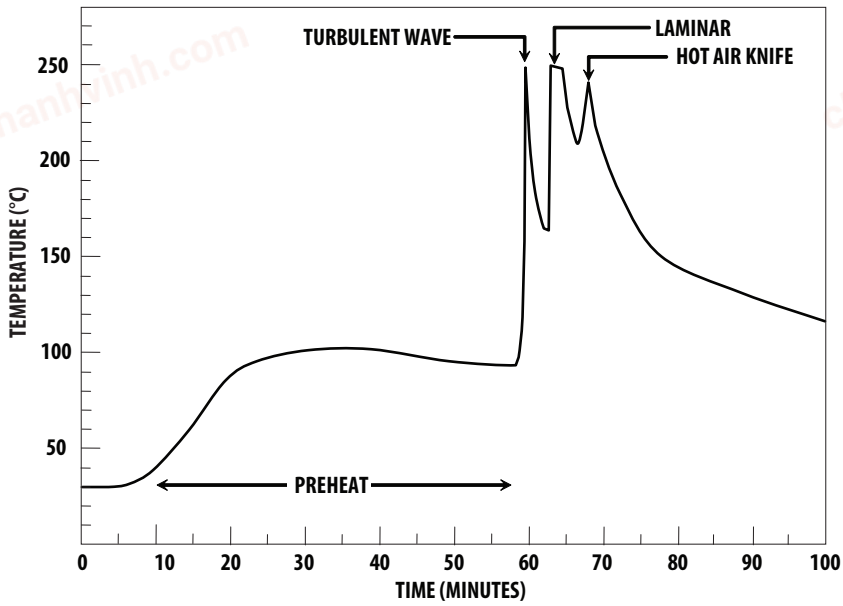

Recommended solder:
Sn63 (Leaded solder alloy)
SAC305 (Lead free solder alloy)

Flux: Rosin flux

Solder bath temperature:
245°C± 5°C (maximum peak temperature = 250°C)

Dwell time: 1.5 sec – 3.0 sec (maximum = 3sec)

Note: Allow for board to be sufficiently cooled to room temperature before exerting mechanical force.

Recommended solder:
Sn63 (Leaded solder alloy)
SAC305 (Lead free solder alloy)

Flux: Rosin flux

Solder bath temperature:
245°C± 5°C (maximum peak temperature = 250°C)

Dwell time: 1.5 sec – 3.0 sec (maximum = 3sec)

Note: Allow for board to be sufficiently cooled to room temperature before exerting mechanical force.

Packaging Label:

(i) Avago Mother Label: (Available on packaging box of ammo pack and shipping box)

AVAGO TECHNOLOGIES

(1P) Item: Part Number

STANDARD LABEL LS0002
RoHS Compliant
e3 max temp 250C

(1T) Lot: Lot Number

(Q) QTY: Quantity

LPN:

CAT: Intensity Bin

(9D)MFG Date: Manufacturing Date

BIN: Color Bin

(P) Customer Item:

(V) Vendor ID:

(9D) Date Code: Date Code

DeptID:

Made In: Country of Origin

chanhvinh.com

(ii) Avago Baby Label (Only available on bulk packaging)

AVAGO TECHNOLOGIES

Lamps Baby Label

RoHS Compliant
e3 max temp 250C

(1P) PART #: Part Number

(1T) LOT #: Lot Number

(9D)MFG DATE: Manufacturing Date

QUANTITY: Packing Quantity

C/O: Country of Origin

Customer P/N:

CAT: Intensity Bin

Supplier Code:

BIN: Color Bin

DATECODE: Date Code

For product information and a complete list of distributors, please go to our web site: **www.avagotech.com**

Avago, Avago Technologies, and the A logo are trademarks of Avago Technologies in the United States and other countries.
Data subject to change. Copyright © 2005-2014 Avago Technologies. All rights reserved. Obsoletes 5989-4254EN
AV02-1556EN - March 25, 2014

AVAGO TECHNOLOGIES