chanhvinh.com

HSMx-C120/C177/C197/C265
High Performance Chip LEDs

Data Sheet



Description

These chip type LEDs utilize Aluminium Indium Galium Phosphide (AlInGaP) material technology. The AlInGaP material has a very high luminous efficiency, capable of producing high light output over a wide range of drive currents. The available colors in this surface mount series are 592 nm Amber, 605 nm Orange, 626 nm Red and 639 nm Deep Red.

All packages are binned by both color and intensity, except for red and deep red color.

These ChipLEDs come either in low profile top emitting packages (HSMx-C177/C197), in a side emitting package (HSMx-C120) or in a reverse mount package (HSMx-C265). The right angle ChipLED is suitable for applications such as LCD back lighting. The top emitting ChipLEDs with wide viewing angle are suitable for light piping and direct backlighting of keypads and panels. The reverse mount ChipLED is suitable for space saving.

In order to facilitate pick and place operation, these ChipLEDs are shipped in tape and reel, with 4000 units per reel for HSMx-C120/C177/C197 and 3000 units per reel for HSMx-C265.

These packages are compatible with IR soldering process.

Features

- High brightness AlInGaP material
- 0805 or 0603 industry standard footprint with 0.4 mm height for top emitting packages
- Also available in right angle emitting and reverse mounting packages
- Diffused optics
- Operating temperature range of –30°C to +85°C
- Compatible with IR soldering
- Available in 4 colors
- Available in 8 mm tape on 7" diameter reel
- Reel sealed in zip locked moisture barrier bags

Applications

- Membrane switch indicator
- LCD backlighting
- Push button backlighting
- Front panel indicator
- Symbol backlighting
- Keypad backlighting
- Microdisplays
- Small message panel signage

Device Selection Guide

Dimensions (mm) [1,2]	Amber	Red	Orange	Deep Red	Package Description
1.6 x 1.0 x 0.6	HSMA-C120	HSMC-C120	HSML-C120	–	Untinted, Non-diffused
2.0 x 1.25 x 0.4	HSMA-C177	HSMC-C177	HSML-C177	HSMT-C177	Untinted, Diffused
1.6 x 0.8 x 0.4	HSMA-C197	HSMC-C197	HSML-C197	HSMT-C197	Untinted, Diffused
3.4 x 1.25 x 1.1	HSMA-C265	HSMC-C265	HSML-C265	HSMT-C265	Untinted, Non-diffused

CAUTION: *HSMA-Cxxx, HSMC-Cxxx, HSML-Cxxx and HSMT-Cxxx LEDs are Class 1A ESD sensitive per JESD22-A114C.01. Please observe appropriate precautions during handling and processing. Refer to Application Note AN-1142 for additional details.*

chanhvinh.com

Package Dimensions

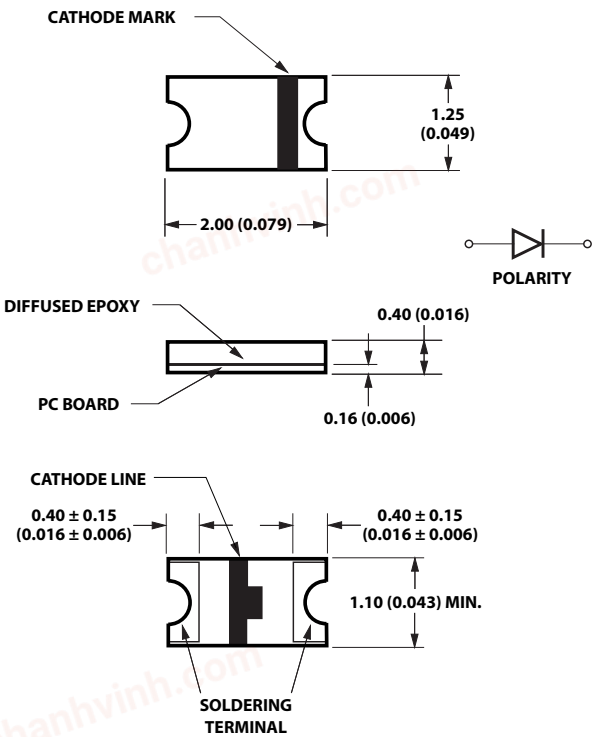

HSMx-C177

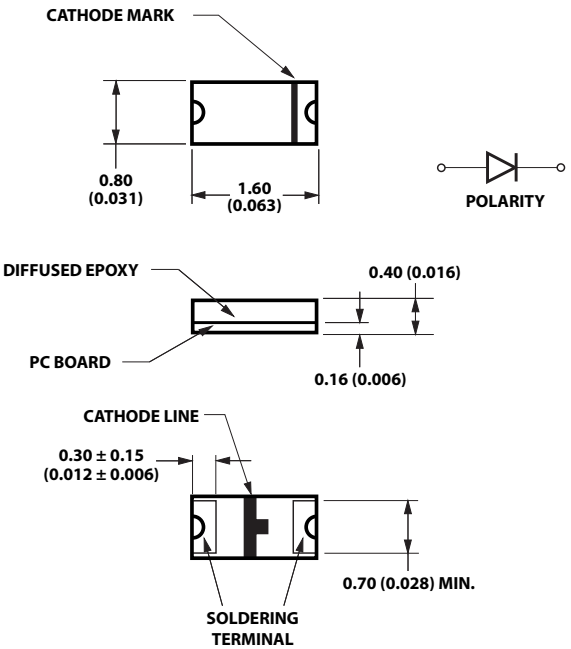

HSMx-C197

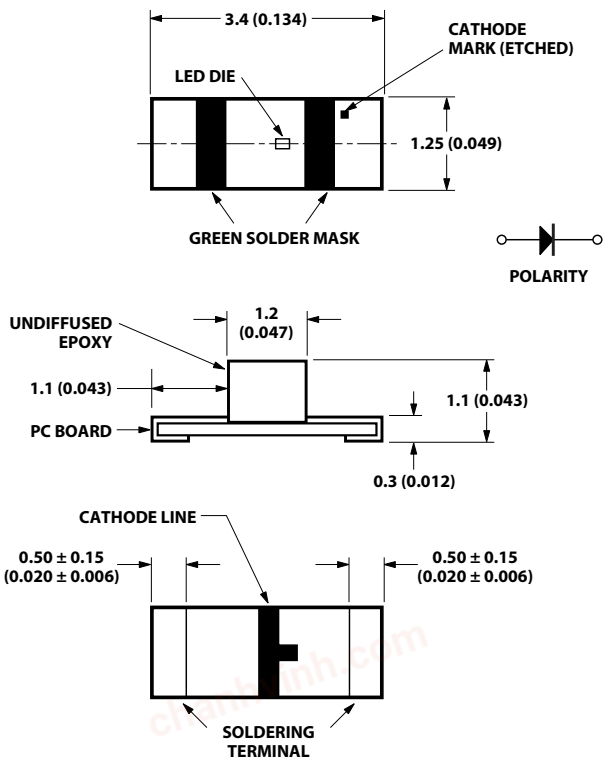

HSMx-C265

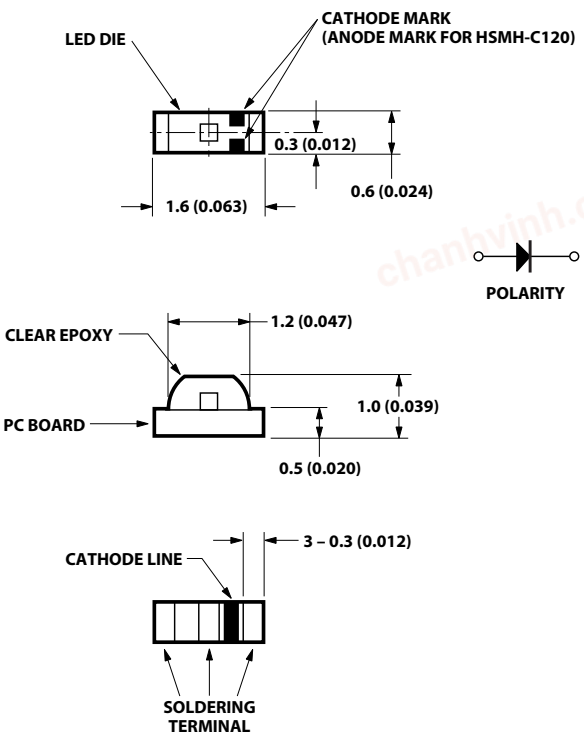

HSMx-C120

NOTES:
1. ALL DIMENSIONS IN MILLIMETERS (INCHES).
2. TOLERANCE IS ± 0.1 mm (± 0.004 IN.) UNLESS OTHERWISE SPECIFIED.

chanhvinh.com

Absolute Maximum Ratings at $T_A = 25^\circ C$

Parameter	HSMx-Cxxx	Units
DC Forward Current [1]	25	mA
Peak Pulsing Current[2]	100	mA
Power Dissipation	60	mW
Reverse Voltage (I_R = 100 µA)	5	V
LED Junction Temperature	95	°C
Operating Temperature Range	–30 to +85	°C
Storage Temperature Range	–40 to +85	°C
Soldering Temperature	See reflow soldering profile (Figures 8 & 9)	

Notes:
1. Derate linearly as shown in Figure 4.
2. Pulse condition of 1/10 duty and 0.1 ms width.

Electrical Characteristics at $T_A = 25^\circ C$

	Forward Voltage V_F (Volts) @ I_F = 20 mA		Reverse Breakdown V_R (Volts) @ I_R = 100 µA	Capacitance C (pF), V_F = 0, f = 1 MHz	Thermal Resistance $R\theta_{J-PIN}$ (°C/W)
Part Number	**Typ.**	**Max.**	**Min.**	**Typ.**	**Typ.**
HSMA-C120	1.9	2.4	5	11	400
HSMA-C177/197	1.9	2.4	5	11	300
HSMA-C265	1.9	2.4	5	11	550
HSMC-C120	1.9	2.4	5	15	400
HSMC-C177/197	1.9	2.4	5	15	300
HSMC-C265	1.9	2.4	5	15	550
HSML-C120	1.9	2.4	5	20	400
HSML-C177/197	1.9	2.4	5	20	300
HSML-C265	1.9	2.4	5	20	550
HSMT-C177/197	1.9	2.4	5	15	300
HSMT-C265	1.9	2.4	5	15	550

V_F Tolerance: ± 0.1 V

chanhvinh.com

Optical Characteristics at $T_A = 25^{\circ}C$

Part Number	Color	Luminous Intensity I_V (mcd) @ 20 mA[1] Min.	Typ.	Color, Peak Wavelength λ_{peak} (nm) Typ.	Dominant Wavelength λ_d[2] (nm) Typ.	Viewing Angle 2 $\theta_{1/2}$ Degrees[3] Typ.	Luminous Efficacy η_V (lm/w) Typ.
HSMA-C120	Amber	28.5	90	595	592	155	480
HSMA-C177/197	Amber	28.5	90	595	592	130	480
HSMA-C265	Amber	28.5	75	595	592	150	480
HSMC-C120	Red	28.5	90	637	626	155	155
HSMC-C177/197	Red	28.5	90	637	626	130	155
HSMC-C265	Red	28.5	75	637	626	150	155
HSML-C120	Orange	28.5	90	609	605	155	370
HSML-C177/197	Orange	28.5	90	609	605	130	370
HSML-C265	Orange	28.5	75	609	605	150	370
HSMT-C177/197	Deep Red	11.2	30	660	639	130	70
HSMT-C265	Deep Red	11.2	25	660	639	150	70

Notes:
1. The luminous intensity, I_V, is measured at the peak of the spatial radiation pattern which may not be aligned with the mechanical axis of the lamp package.
2. The dominant wavelength, λ_d, is derived from the CIE Chromaticity Diagram and represents the perceived color of the device.
3. $\theta_{1/2}$ is the off-axis angle where the luminous intensity is 1/2 the peak intensity.

chanhvinh.com

Color Bin Limits

	Orange Color Bins[1]	
	Dom. Wavelength (nm)	
Bin ID	**Min.**	**Max.**
A	597.0	600.0
B	600.0	603.0
C	603.0	606.0
D	606.0	609.0
E	609.0	612.0
F	612.0	615.0

Tolerance: ± 1 nm

	Amber Color Bins[1]	
	Dom. Wavelength (nm)	
Bin ID	**Min.**	**Max.**
A	582.0	584.5
B	584.5	587.0
C	587.0	589.5
D	589.5	592.0
E	592.0	594.5
F	594.5	597.0

Tolerance: ± 1 nm

	Red Color Bins [1]	
	Dom. Wavelength (nm)	
Bin ID	**Min.**	**Max.**
-	620.0	635.0

Tolerance: ±1 nm

Note:
1. Bin categories are established for classification of products. Products may not be available in all categories. Please contact your Avago representative for information on currently available bins.

Light Intensity (Iv) Bin Limits[1]

	Intensity (mcd)	
Bin ID	**Min.**	**Max.**
A	0.11	0.18
B	0.18	0.29
C	0.29	0.45
D	0.45	0.72
E	0.72	1.10
F	1.10	1.80
G	1.80	2.80
H	2.80	4.50
J	4.50	7.20
K	7.20	11.20
L	11.20	18.00
M	18.00	28.50
N	28.50	45.00
P	45.00	71.50
Q	71.50	112.50
R	112.50	180.00
S	180.00	285.00
T	285.00	450.00
U	450.00	715.00
V	715.00	1125.00
W	1125.00	1800.00
X	1800.00	2850.00
Y	2850.00	4500.00

Tolerance: ± 15%

Notes:
1. Bin categories are established for classification of products. Products may not be available in all categories. Please contact your Avago representative for information on currently available bins.
2. The Iv binning specification set-up is for lowest allowable Iv binning only. There are no upper Iv bin limits.

chanhvinh.com

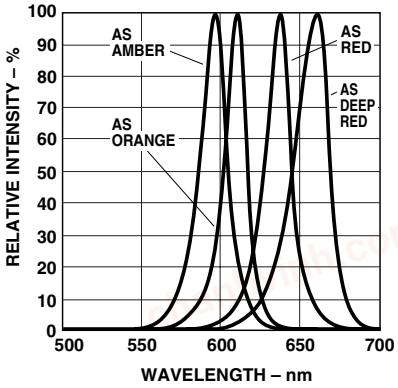

Figure 1. Relative intensity vs. wavelength.

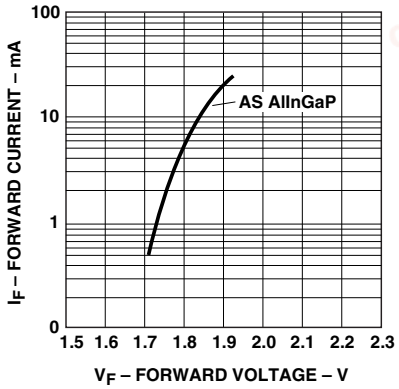

Figure 2. Forward current vs. forward voltage.

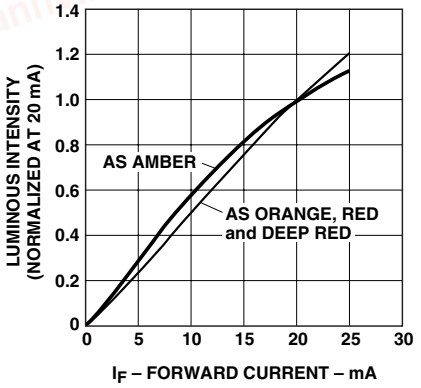

Figure 3. Luminous intensity vs. forward current.

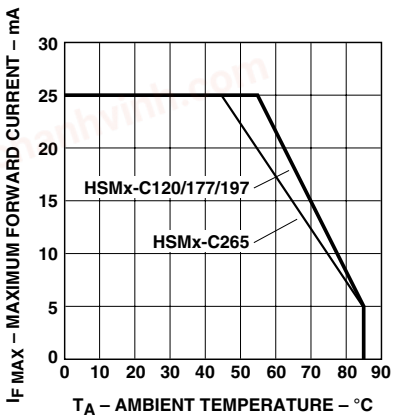

Figure 4. Maximum forward current vs. ambient temperature.

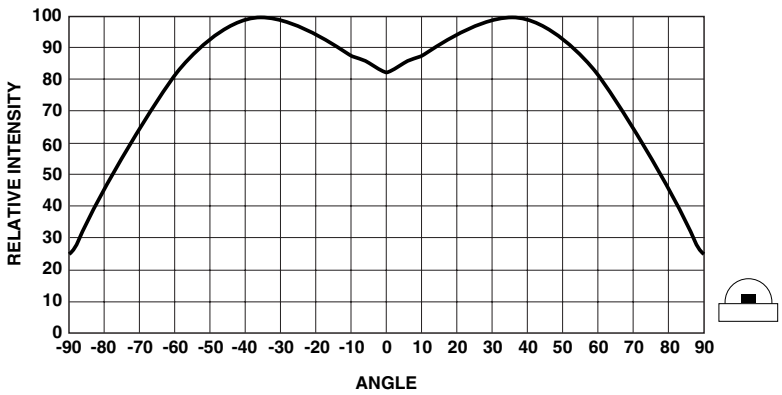

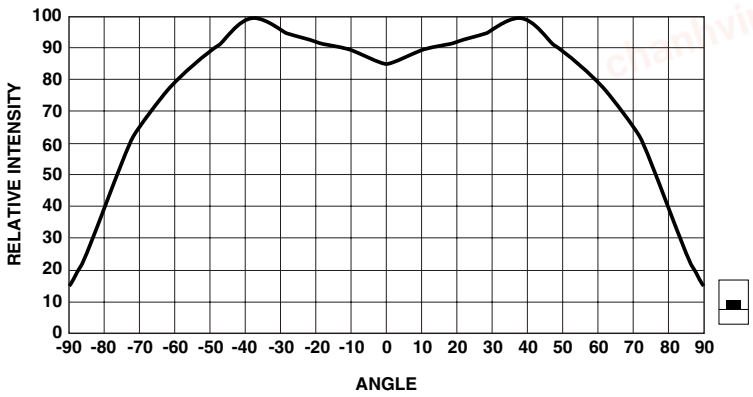

Figure 5. Relative intensity vs. angle for HSMx-C120.

chanhvinh.com



Figure 6. Relative intensity vs. angle for HSMx-C177/197.

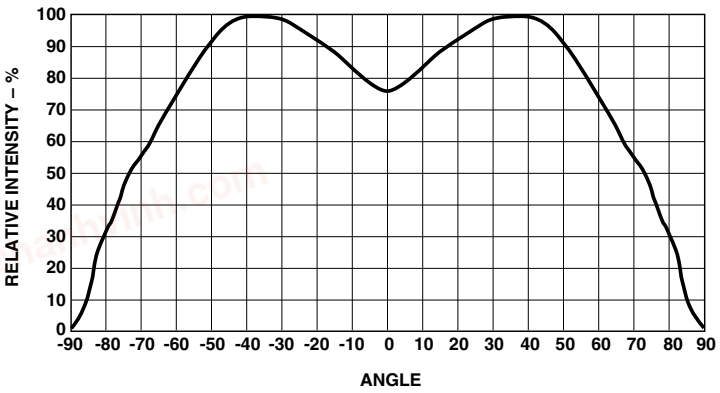

Figure 7. Relative intensity vs. angle for HSMx-C265.

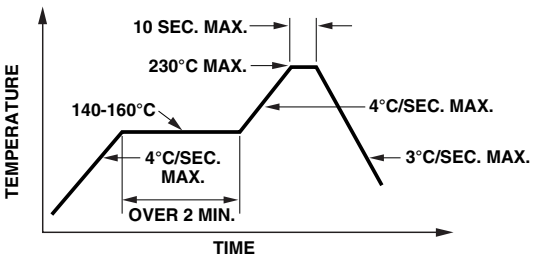

Figure 8. Recommended reflow soldering profile.

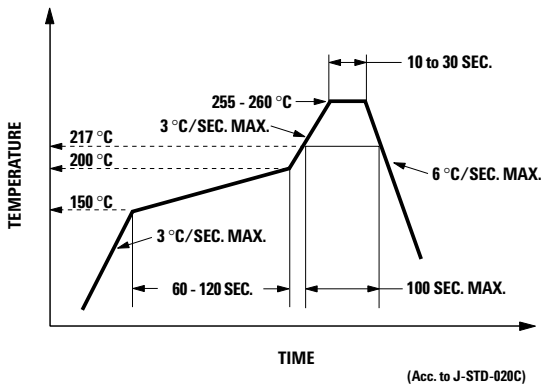

Figure 9. Recommended Pb-free reflow soldering profile.

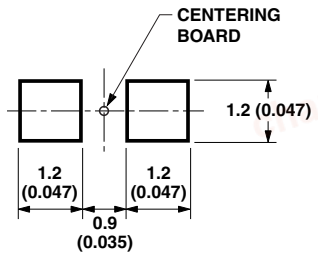

Figure 10. Recommended soldering pattern for HSMx-C177.

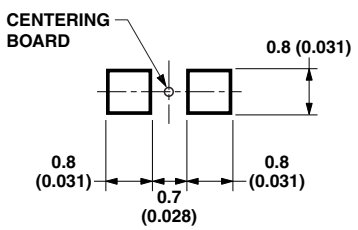

Figure 11. Recommended soldering pattern for HSMx-C197.

NOTE:
1. ALL DIMENSIONS IN MILLIMETERS (INCHES).

chanhvinh.com

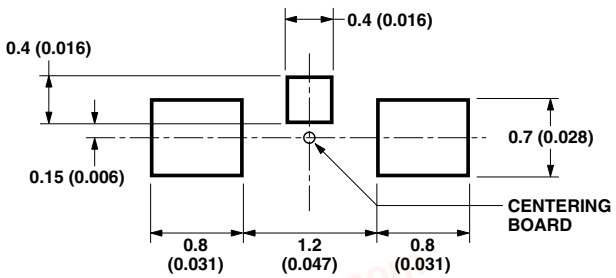

Figure 12. Recommended soldering pattern for HSMx-C120.

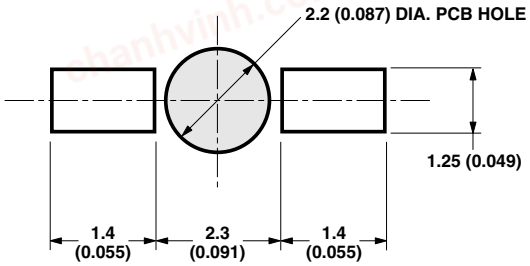

Figure 13. Recommended soldering pattern for HSMx-C265.

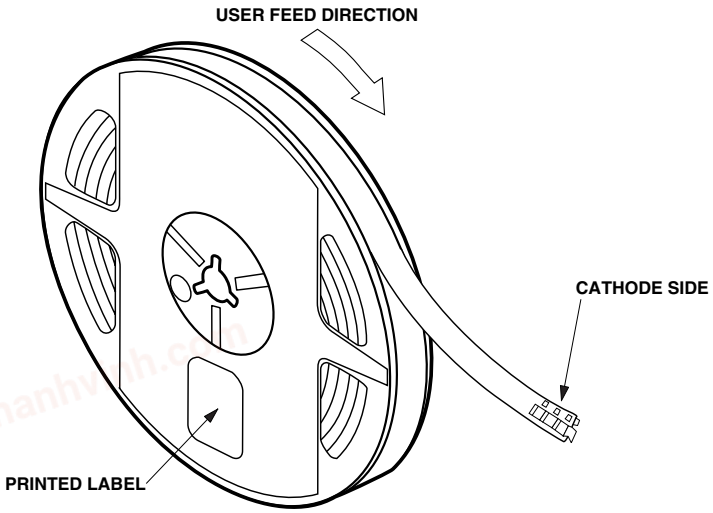

Figure 14. Reeling orientation.

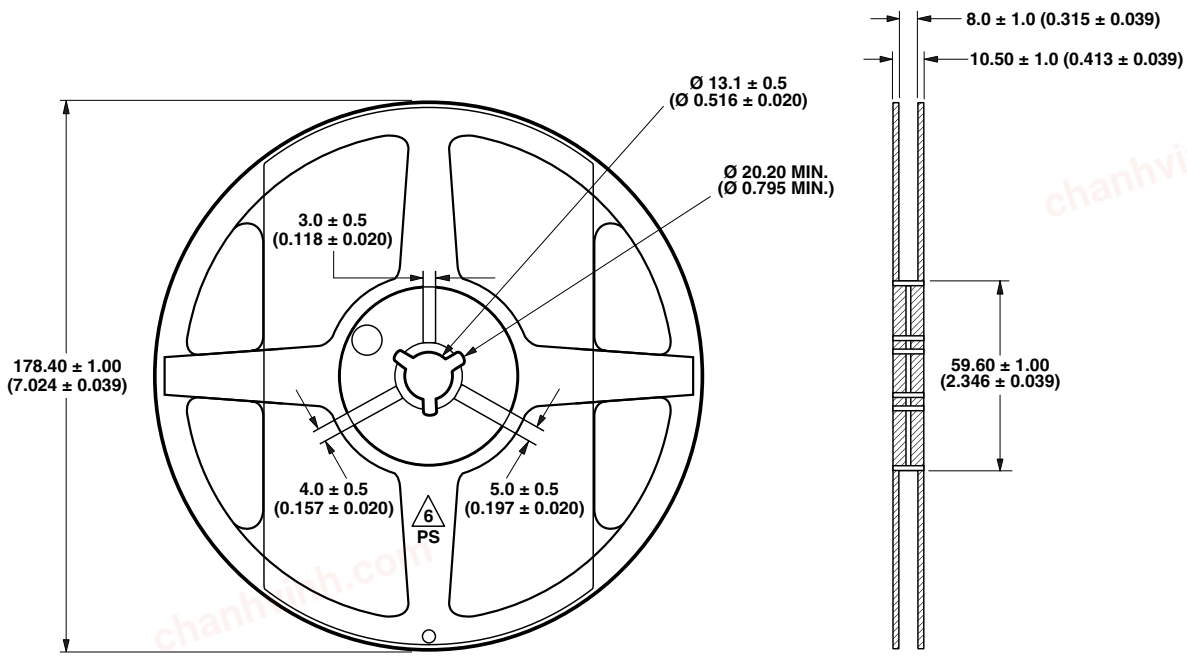

Figure 15. Reel dimensions.

NOTE:
1. ALL DIMENSIONS IN MILLIMETERS (INCHES).

chanhvinh.com

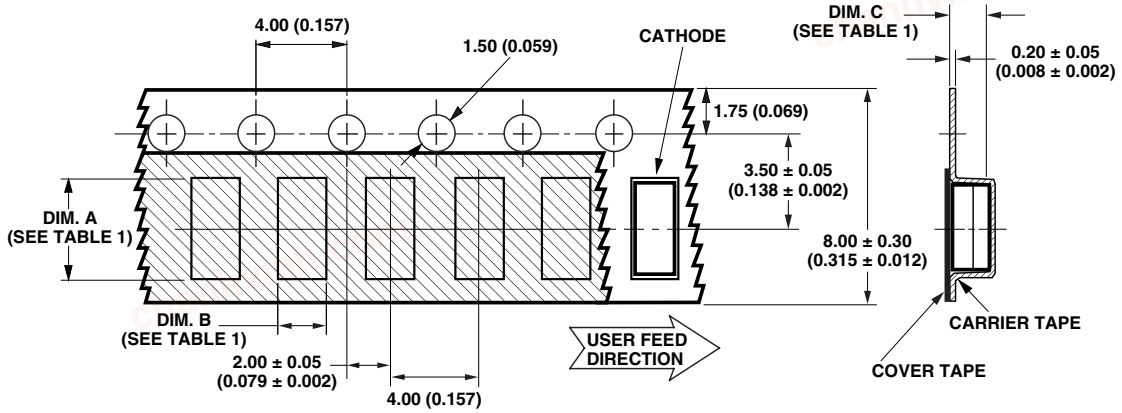

TABLE 1
DIMENSIONS IN MILLIMETERS (INCHES)

PART NUMBER	DIM. A ± 0.10 (0.004)	DIM. B ± 0.10 (0.004)	DIM. C ± 0.10 (0.004)
HSMx-C120 SERIES	1.90 (0.075)	1.15 (0.045)	0.75 (0.030)
HSMx-C177 SERIES	2.30 (0.091)	1.40 (0.055)	0.60 (0.024)
HSMx-C197 SERIES	1.75 (0.069)	0.95 (0.037)	0.60 (0.024)

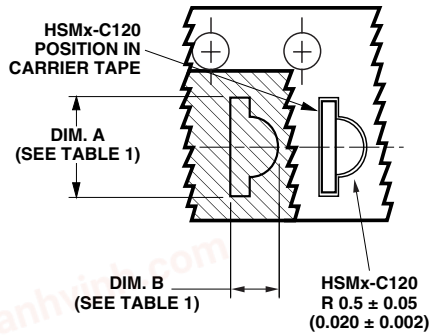

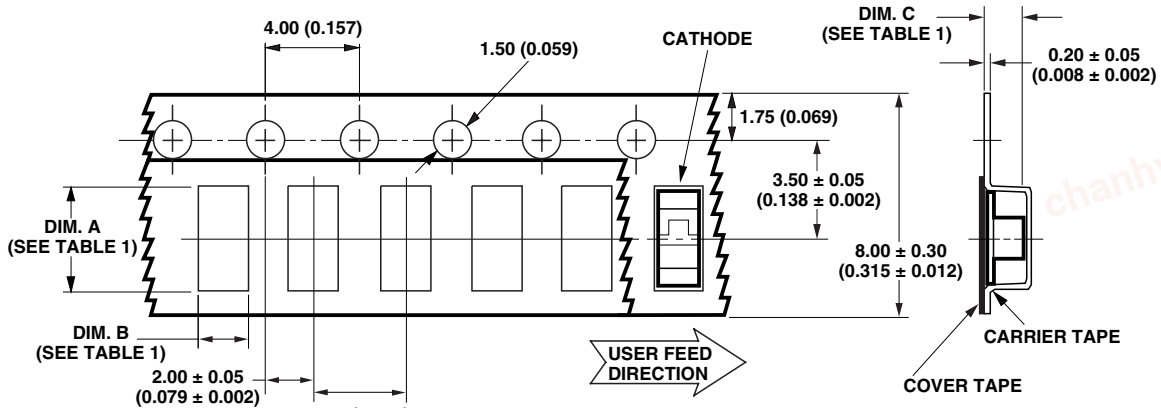

TABLE 1
DIMENSIONS IN MILLIMETERS (INCHES)

PART NUMBER	DIM. A ± 0.10 (0.004)	DIM. B ± 0.10 (0.004)	DIM. C ± 0.10 (0.004)
HSMx-C265 SERIES	3.70 (0.146)	1.45 (0.057)	1.30 (0.051)

Figure 16. Tape dimensions.

NOTES:
1. ALL DIMENSIONS IN MILLIMETERS (INCHES).
2. TOLERANCE IS ± 0.1 mm (± 0.004 IN.) UNLESS OTHERWISE SPECIFIED.

chanhvinh.com

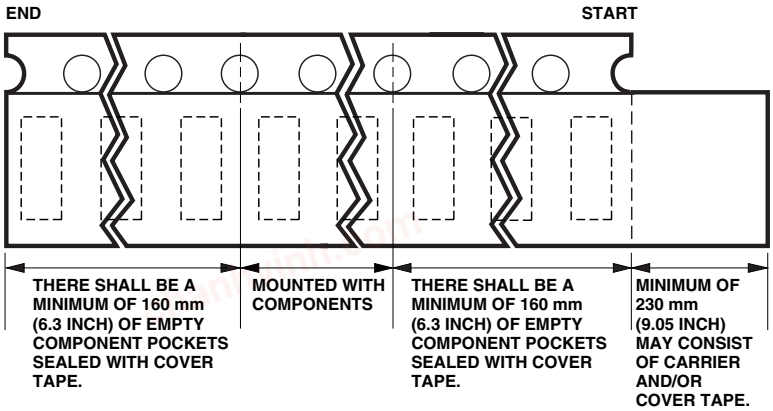

Figure 17. Tape leader and trailer dimensions.

Convective IR Reflow Soldering

For more information on IR reflow soldering, refer to Application Note 1060, *Surface Mounting SMT LED Indicator Components*.

Storage Condition:

5 to 30°C @ 60% RH max.

Baking is required under the condition:

a) Humidity Indicator Card is >10% when read at 23 ± 5°C

b) Device exposed to factory conditions <30°C/60% RH more than 672 hours.

Baking recommended condition: 60 ± 5°C for 20 hours.

For product information and a complete list of distributors, please go to our website: **www.avagotech.com**

Avago, Avago Technologies, and the A logo are trademarks of Avago Technologies in the United States and other countries.
Data subject to change. Copyright © 2005-2009 Avago Technologies. All rights reserved. Obsoletes AV01-0520EN
AV02-0975EN - July 9, 2009