chanhvinh.com

HSMx-A10x-xxxxx

PLCC-2, Surface Mount LED Indicator

Data Sheet

Lead (Pb) Free
RoHS 6 fully
compliant



Description

This family of SMT LEDs is packaged in the industry standard PLCC-2 package. These SMT LEDs have high reliability performance and are designed to work under a wide range of environmental conditions. This high reliability feature makes them ideally suited to be used under harsh interior automotive as well as interior signs application conditions.

To facilitate easy pick & place assembly, the LEDs are packed in EIA-compliant tape and reel. Every reel will be shipped in single intensity and color bin, except red color, to provide close uniformity.

These LEDs are compatible with IR solder reflow process. Due to the high reliability feature of these products, they can also be mounted using through-the-wave soldering process.

The super wide viewing angle at 120˚ makes these LEDs ideally suited for panel, push button, or general backlighting in automotive interior, office equipment, industrial equipment, and home appliances. The flat top emitting surface makes it easy for these LEDs to mate with light pipes. With the built-in reflector pushing up the intensity of the light output, these LEDs are also suitable to be used as LED pixels in interior electronic signs.

Features

- Industry standard PLCC-2 package
- High reliability LED package
- High brightness using AlInGaP and InGaN dice technologies
- Available in full selection of colors
- Super wide viewing angle at 120˚
- Available in 8 mm carrier tape on 7 inch reel (2000 pieces)
- Compatible with both IR and TTW soldering process

Applications

- Interior automotive
  - Instrument panel backlighting
  - Central console backlighting
  - Cabin backlighting
- Electronic signs and signals
  - Interior full color sign
  - Variable message sign
- Office automation, home appliances, industrial equipment
  - Front panel backlighting
  - Push button backlighting
  - Display backlighting

CAUTION: *HSMN,M,K and E-A10x-xxxxx LEDs are Class 2 ESD sensitive. Please observe appropriate precautions during handling and processing. Refer to Avago Application Note AN-1142 for additional details.*

chanhvinh.com

Package Dimensions

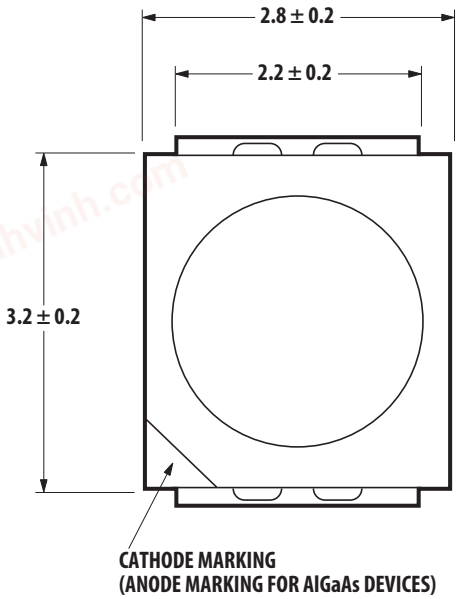

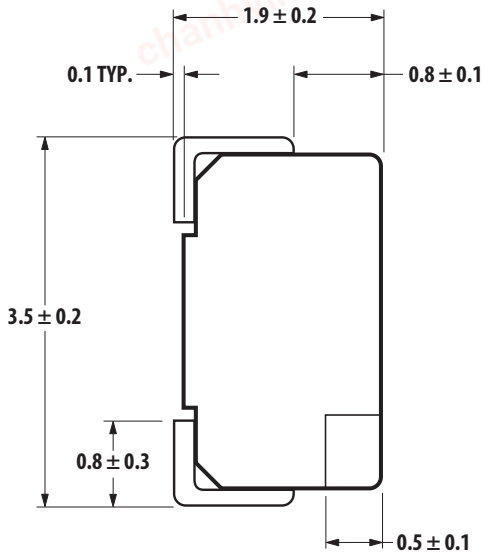

TOP MOUNT

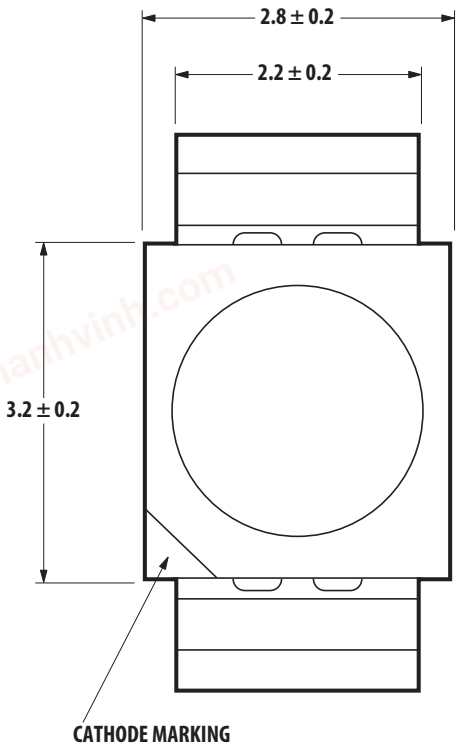

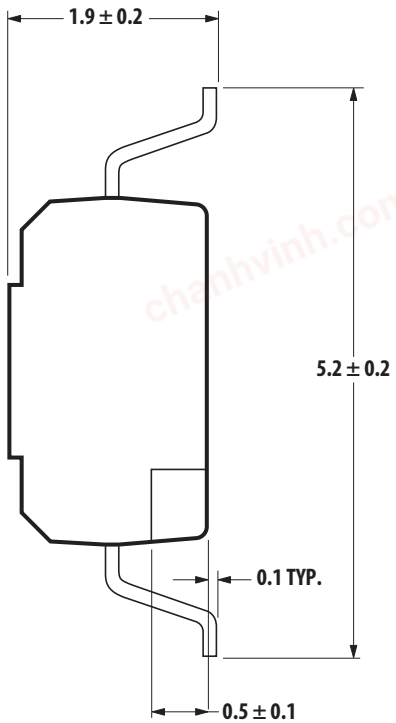

REVERSE MOUNT

NOTE: ALL DIMENSIONS IN MILLIMETERS.

chanhvinh.com

Table 1. Device Selection Guide

Red

Part Number	Min IV (mcd)	Typ. IV (mcd)	Max. IV (mcd)	Test Current (mA)	Dice Technology
HSMS-A100-J00J1	4.50	15.00	-	20	GaP
HSMS-A100-L00J1	11.20	15.00	-	20	GaP
HSMS-A100-J80J2	5.60	-	14.00	10	GaP
HSMH-A100-L00J1	11.20	15.00	-	20	AlGaAs
HSMH-A100-N00J1	28.50	50.00	-	20	AlGaAs
HSMC-A100-Q00J1	71.50	100.00	-	20	AlInGaP
HSMC-A100-R00J1	112.50	140.00	-	20	AlInGaP
HSMC-A101-S00J1	180.00	220.00	-	20	AlInGaP
HSMZ-A100-T00J1	285.00	350.00	-	20	AlInGaP

Red Orange

Part Number	Min IV (mcd)	Typ. IV (mcd)	Max. IV (mcd)	Test Current (mA)	Dice Technology
HSMJ-A100-Q00J1	71.50	100.00	-	20	AlInGaP
HSMJ-A101-S00J1	180.00	200.00	-	20	AlInGaP
HSMJ-A100-T40J1	285.00	-	715.00	20	AlInGaP
HSMV-A100-T00J1	285.00	350.00	-	20	AlInGaP
HSMJ-A100-R40J1	112.50	-	285.00	20	AlInGaP

Orange

Part Number	Min IV (mcd)	Typ. IV (mcd)	Max. IV (mcd)	Test Current (mA)	Dice Technology
HSMD-A100-J00J1	4.50	15.00	-	20	GaP
HSMD-A100-L00J1	11.20	15.00	-	20	GaP
HSMD-A100-K4PJ2	7.20	-	18.00	10	GaP
HSML-A100-Q00J1	71.50	100.00	-	20	AlInGaP
HSML-A101-S00J1	180.00	220.00	-	20	AlInGaP

Yellow / Amber

Part Number	Min IV (mcd)	Typ. IV (mcd)	Max. IV (mcd)	Test Current (mA)	Dice Technology
HSMY-A100-J00J1	4.50	12.00	-	20	GaP
HSMY-A100-L00J1	11.20	12.00	-	20	GaP
HSMA-A100-Q00J1	71.50	100.00	-	20	AlInGaP
HSMA-A101-S00J1	180.00	220.00	-	20	AlInGaP
HSMU-A100-S00J1	180.00	320.00	-	20	AlInGaP
HSMA-A101-R8WJ1	140.00	-	355.00	20	AlInGaP

Table 1. Device Selection Guide (Cont.)

Yellow Green

Part Number	Min IV (mcd)	Typ. IV (mcd)	Max. IV (mcd)	Test Current (mA)	Dice Technology
HSMG-A100-J02J1	4.50	18.00	-	20	GaP
HSMG-A100-K72J2	9.00	-	18.00	10	GaP
HSME-A100-M02J1	18.00	70.00	-	20	AlInGaP
HSME-A100-N82J1	35.50	-	90.00	20	AlInGaP

Emerald Green

Part Number	Min IV (mcd)	Typ. IV (mcd)	Max. IV (mcd)	Test Current (mA)	Dice Technology
HSMG-A100-H01J1	2.80	8.00	-	20	GaP
HSME-A100-L01J1	11.20	40.00	-	20	AlInGaP
HSME-A100-M3PJ1	18.00	-	35.50	20	AlInGaP

Green

Part Number	Min IV (mcd)	Typ. IV (mcd)	Max. IV (mcd)	Test Current (mA)	Dice Technology
HSMM-A101-R00J1	112.50	200.00	-	20	InGaN
HSMM-A100-S00J1	180.00	350.00	-	20	InGaN
HSMM-A100-U4PJ1	450.00	-	1125.00	20	InGaN

Blue

Part Number	Min IV (mcd)	Typ. IV (mcd)	Max. IV (mcd)	Test Current (mA)	Dice Technology
HSMN-A101-N00J1	28.50	50.00	-	20	InGaN
HSMN-A100-P00J1	45.00	70.00	-	20	InGaN
HSMN-A100-R4YJ1	112.50	-	285.00	20	InGaN
HSMN-A100-S4YJ1	180.00	-	450.00	20	InGaN
HSMN-A100-R8YJ1	140.00	-	355.00	20	InGaN

chanhvinh.com

Part Numbering System

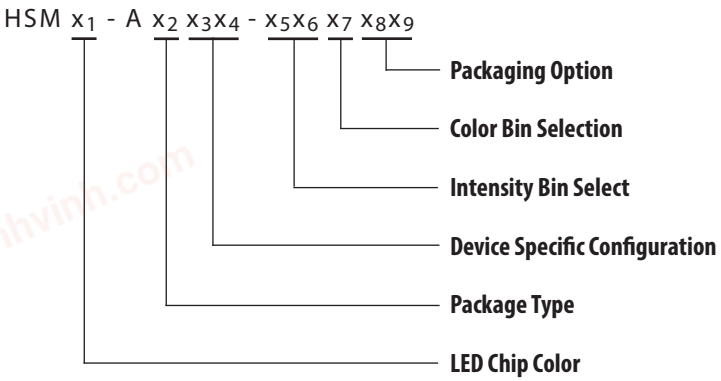

Absolute Maximum Ratings (TA = 25°C)

Parameters	HSMS/D/Y/G	HSMH	HSMC/J/L/A	HSME	HSMZ/V/U	HSMM/N
DC Forward Current [1]	30 mA	30 mA	30 mA [3,4]	20 mA [4]	30 mA [3,4]	30 mA
Peak Forward Current [2]	100 mA	100 mA	100 mA	100 mA	100 mA	100 mA
Power Dissipation	63 mW	60 mW	63 mW	48 mW	63 mW	114 mW
Reverse Voltage	5 V					
Junction Temperature	110°C					
Operating Temperature	–55°C to +100°C					
Storage Temperature	–55°C to +100°C					

Notes:
1. Derate linearly as shown in Figure 4.
2. Duty factor = 10%, Frequency = 1 kHz.
3. Drive current between 10 mA and 30 mA is recommended for best long term performance.
4. Operation at current below 5 mA is not recommended.

chanhvinh.com

Optical Characteristics ($T_A = 25^\circ C$)

Color	Part Number	Dice Technology	Peak Wavelength λ_{PEAK} (nm) Typ.	Dominant Wavelength [1] λD (nm) Typ.	Viewing Angle 2 θ1/2 [2] (Degrees) Typ.	Luminous Efficacy ηv [3] (lm/W) Typ.	Luminous Intensity/ Total Flux Iv(mcd)/Φv(mlm) Typ.
Red	HSMS-A100	GaP	635	626	120	120	0.45
	HSMH-A100	AlGaAs	645	637	120	63	0.45
	HSMC-A10x	AlInGaP	635	626	120	150	0.45
	HSMZ-A100	AlInGaP	635	626	120	155	0.45
Red	HSMJ-A10x	AlInGaP	621	615	120	240	0.45
Orange	HSMV-A100	AlInGaP	623	617	120	263	0.45
Orange	HSMD-A100	GaP	600	602	120	380	0.45
	HSML-A10x	AlInGaP	609	605	120	320	0.45
Amber	HSMY-A100	GaP	583	585	120	520	0.45
	HSMA-A10x	AlInGaP	592	590	120	480	0.45
	HSMU-A100	AlInGaP	594	592	120	500	0.45
Yellow	HSMG-A100	GaP	565	569	120	590	0.45
Green	HSME-A100	AlInGaP	575	570	120	560	0.45
Emerald	HSMG-A100	GaP	558	560	120	650	0.45
Green	HSME-A100	AlInGaP	566	560	120	610	0.45
Green	HSMM-A10x	InGaN	523	525	120	500	0.45
Blue	HSMN-A10x	InGaN	468	470	120	75	0.45

Notes:
1. The dominant wavelength, λ_D, is derived from the CIE Chromaticity Diagram and represents the color of the device.
2. $\theta_{1/2}$ is the off-axis angle where the luminous intensity is 1/2 the peak intensity.
3. Radiant intensity, I_e in watts/steradian, may be calculated from the equation $I_e = I_v/\eta_v$, where I_v is the luminous intensity in candelas and η_v is the luminous efficacy in lumens/watt.

Electrical Characteristics ($T_A = 25^\circ C$)

Part Number	Forward Voltage VF (Volts) @ $I_F = 20$ mA Typ.	Forward Voltage VF (Volts) @ $I_F = 20$ mA Max.	Reverse Voltage V_R @ 100 µA Min.	Reverse Voltage V_R @ 10 µA Min.	Thermal Resistance $R\theta_{JP}$ (°C/W)
HSMS/D/Y/G	2.2	2.6	5	—	180
HSMH	1.9	2.6	5	—	180
HSMC/J/L/A/E	1.9	2.4	5	—	280
HSMZ/V/U	1.9	2.4	5	—	280
HSMM/N	3.4	4.05	—	5	280

chanhvinh.com

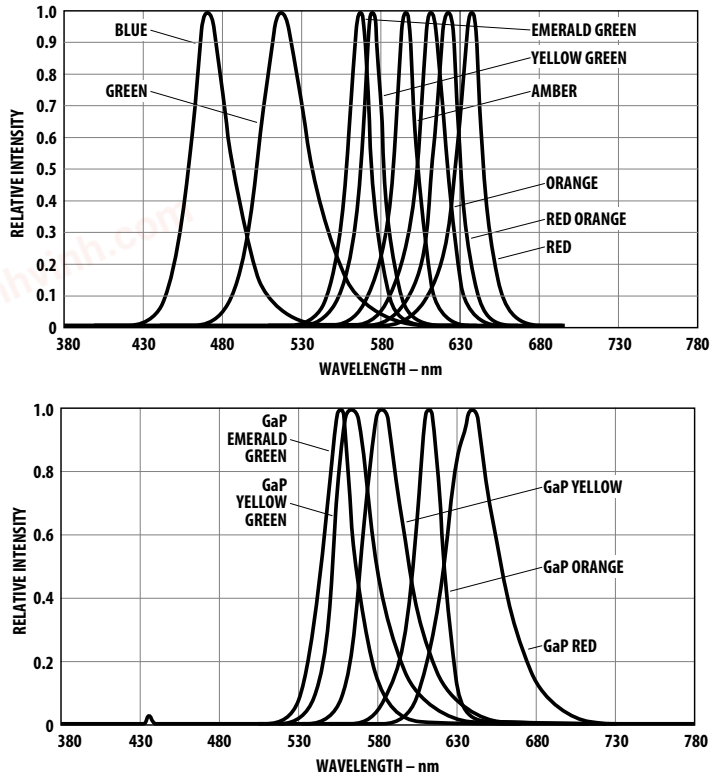

Figure 1. Relative intensity vs. wavelength.

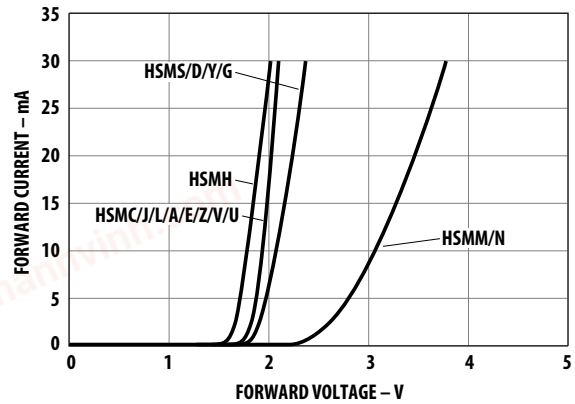

Figure 2. Forward current vs. forward voltage.

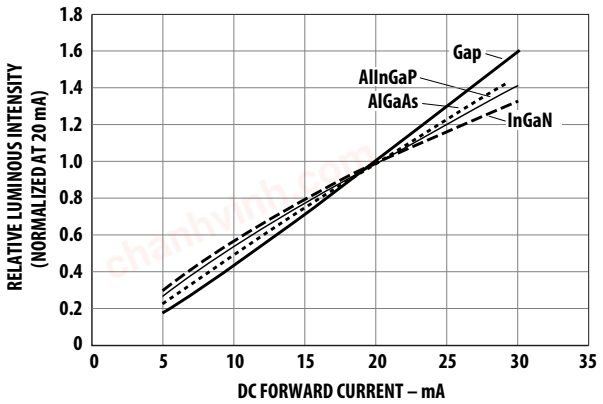

Figure 3. Relative intensity vs. forward current.

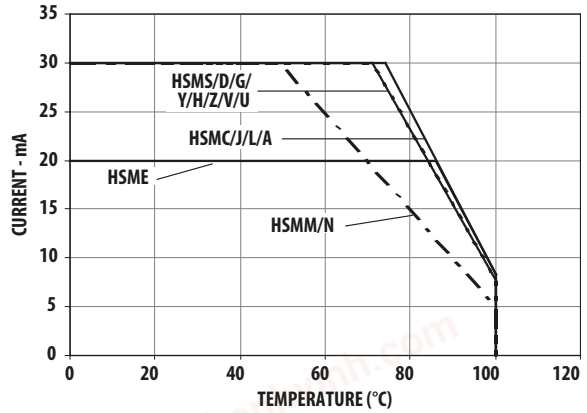

Figure 4. Maximum forward current vs. ambient temperature. Derated based on $T_JMAX = 110°C$, $R\theta_{JA} = 500°C/W$.

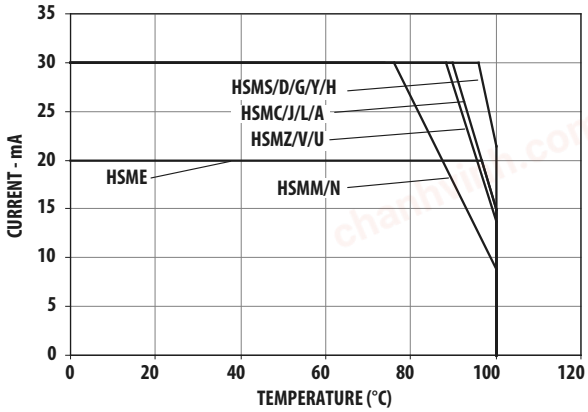

Figure 4b. Maximum Forward Current Vs. Solder Point Temperature. Derated based on $T_JMAX = 110°C$, $R\theta_{JP} = 180°C/W$ or $280°C/W$.

chanhvinh.com

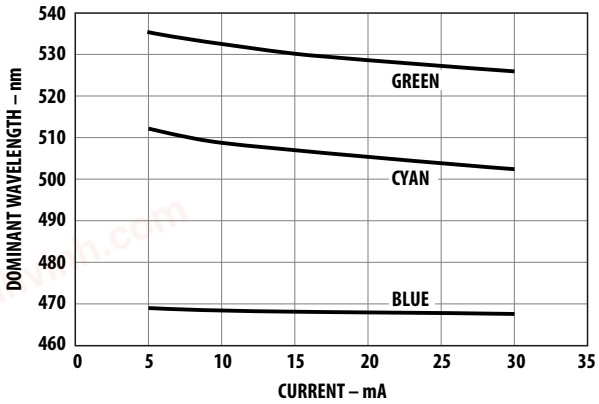

Figure 5. Dominant wavelength vs. forward current – InGaN devices.

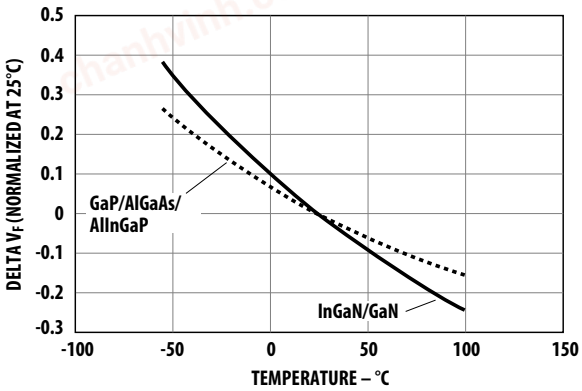

Figure 6. Forward voltage shift vs. temperature.

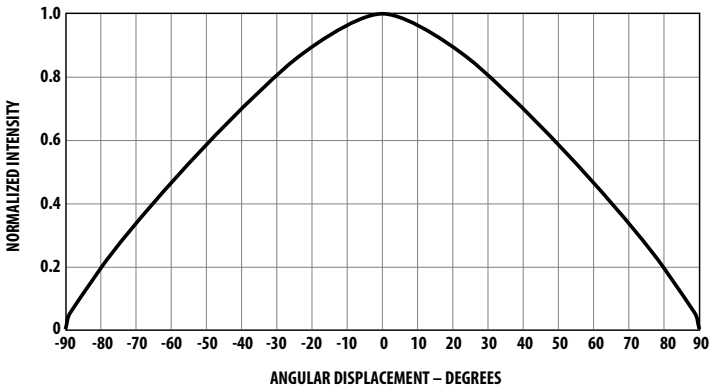

Figure 7. Radiation Pattern.

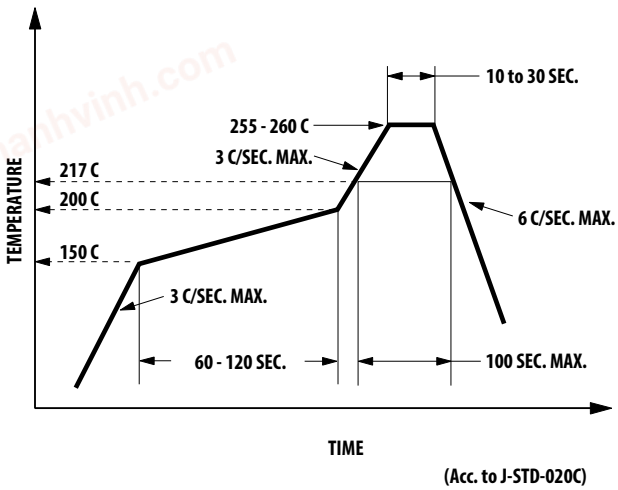

Figure 8. Recommended Pb-free reflow soldering profile.

Note: For detail information on reflow soldering of Avago surface mount LEDs, do refer to Avago Application Note AN 1060 Surface Mounting SMT LED Indicator Components.

Reflow soldering must not be done more than 2 times. Do observe necessary precautions of handling moisture sensitive device as stated in below section.

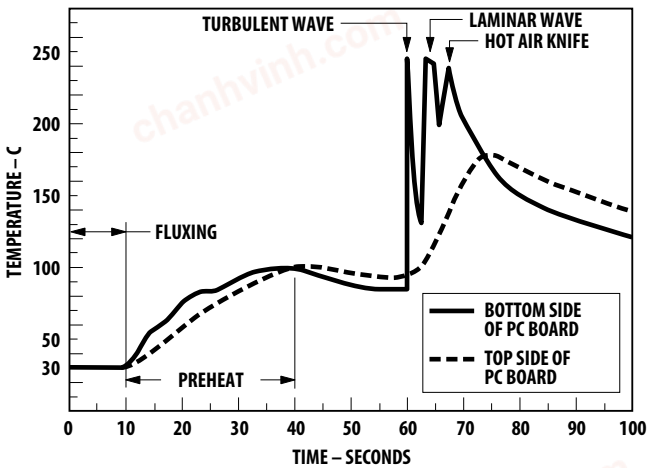

CONVEYOR SPEED = 1.83 M/MIN (6 FT/MIN)
PREHEAT SETTING = 150C (100C PCB)
SOLDER WAVE TEMPERATURE = 245C
AIR KNIFE AIR TEMPERATURE = 390C
AIR KNIFE DISTANCE = 1.91 mm (0.25 IN.)
AIR KNIFE ANGLE = 40
LEADED SOLDER: SN63; FLUX: RMA
LEAD-FREE SOLDER: 96.5 wt% SN, 3 wt% Ag, 0.5 wt% Cu

NOTE: ALLOW FOR BOARDS TO BE SUFFICIENTLY COOLED BEFORE EXERTING MECHANICAL FORCE.

Figure 9. Recommended wave soldering profile.

chanhvinh.com

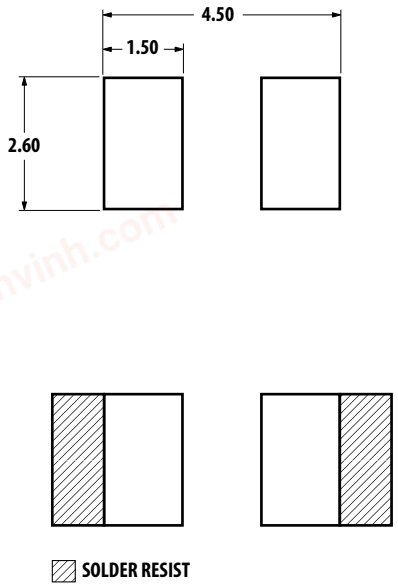

Figure 10. Recommended soldering pad pattern

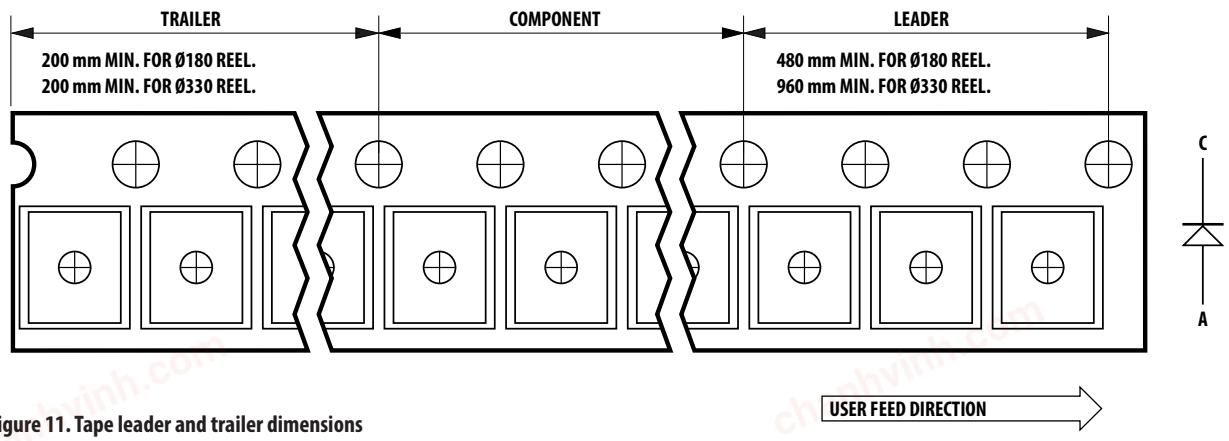

Figure 11. Tape leader and trailer dimensions

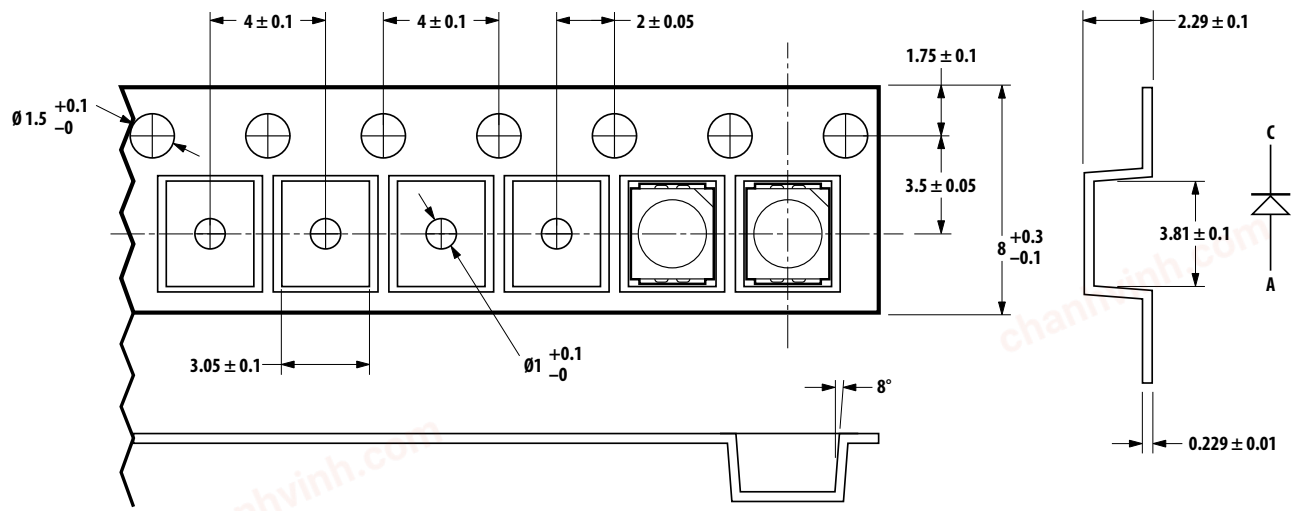

Figure 12. Tape dimensions

chanhvinh.com

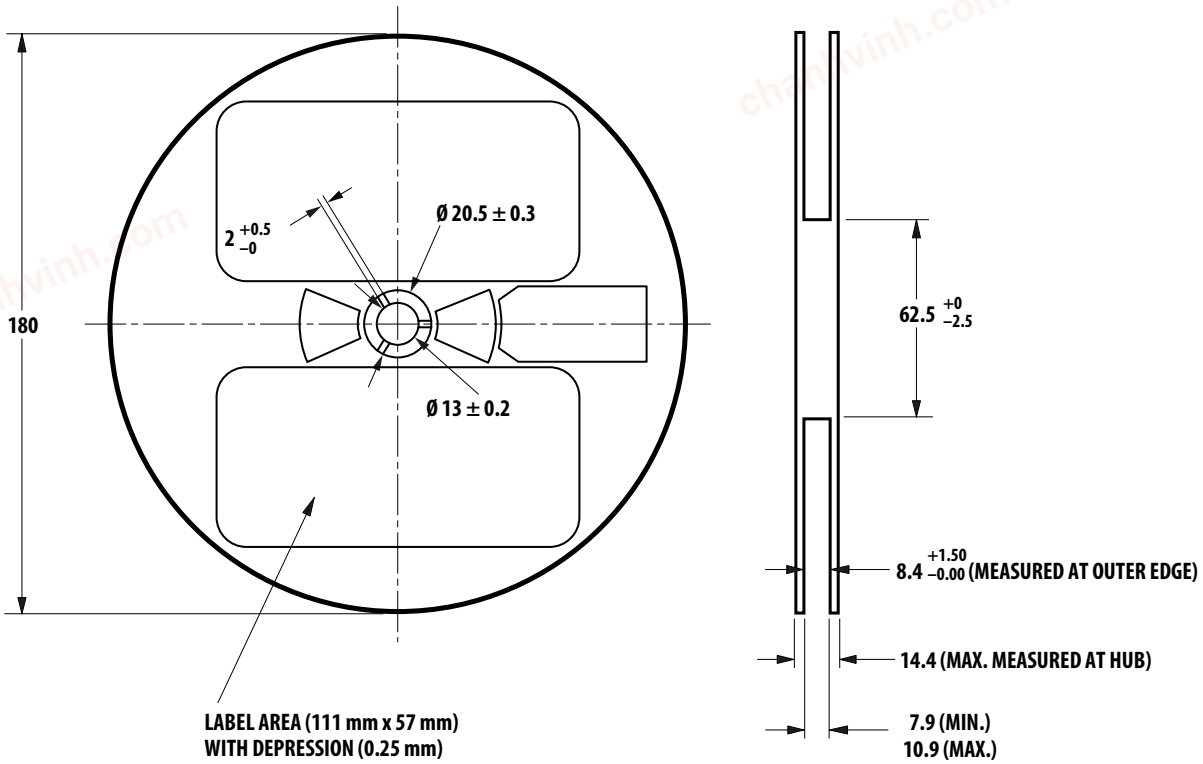

Figure 13. Reel dimensions.

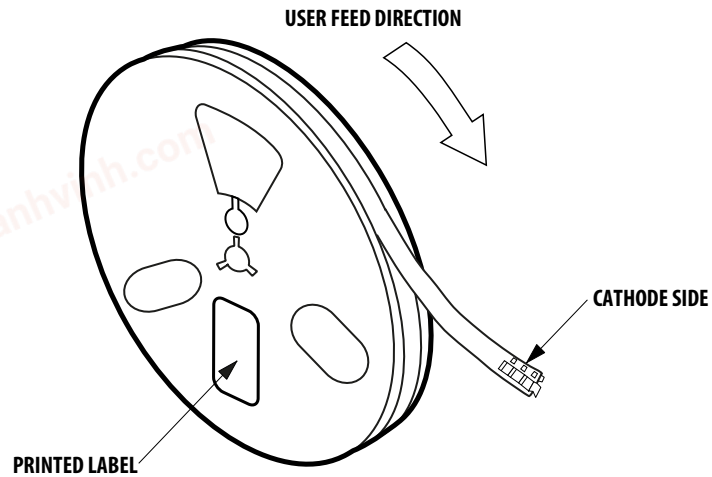

Figure 14. Reeling orientation.

chanhvinh.com

Intensity Bin Select (X_5X_6)

Individual reel will contain parts from one half bin only.

X_5	Min I_V Bin

X_6	
0	Full Distribution
2	2 half bins starting from $X_5$1
3	3 half bins starting from $X_5$1
4	4 half bins starting from $X_5$1
5	5 half bins starting from $X_5$1
6	2 half bins starting from $X_5$2
7	3 half bins starting from $X_5$2
8	4 half bins starting from $X_5$2
9	5 half bins starting from $X_5$2

Intensity Bin Limits

Bin ID	Min. (mcd)	Max. (mcd)
G1	1.80	2.24
G2	2.24	2.80
H1	2.80	3.55
H2	3.55	4.50
J1	4.50	5.60
J2	5.60	7.20
K1	7.20	9.00
K2	9.00	11.20
L1	11.20	14.00
L2	14.00	18.00
M1	18.00	22.40
M2	22.40	28.50
N1	28.50	35.50
N2	35.50	45.00
P1	45.00	56.00
P2	56.00	71.50
Q1	71.50	90.00
Q2	90.00	112.50
R1	112.50	140.00
R2	140.00	180.00
S1	180.00	224.00
S2	224.00	285.00
T1	285.00	355.00
T2	355.00	450.00
U1	450.00	560.00
U2	560.00	715.00
V1	715.00	900.00
V2	900.00	1125.00
W1	1125.00	1400.00
W2	1400.00	1800.00
X1	1800.00	2240.00
X2	2240.00	2850.00

Tolerance of each bin limit = ± 12%

chanhvinh.com

Color Bin Select (X_7)

Individual reel will contain parts from one full bin only.

X_7	
0	Full Distribution
Z	A and B only
Y	B and C only
W	C and D only
V	D and E only
U	E and F only
T	F and G only
S	G and H only
Q	A, B, and C only
P	B, C, and D only
N	C, D, and E only
M	D, E, and F only
L	E, F, and G only
K	F, G, and H only
1	A, B, C, and D only
2	E, F, G, and H only
3	B, C, D, and E only
4	C, D, E, and F only
5	A, B, C, D, and E only
6	B, C, D, E, and F only

Color Bin Limits

Blue	Min. (nm)	Max. (nm)
A	460.0	465.0
B	465.0	470.0
C	470.0	475.0
D	475.0	480.0

Cyan	Min. (nm)	Max. (nm)
A	490.0	495.0
B	495.0	500.0
C	500.0	505.0
D	505.0	510.0

Green	Min. (nm)	Max. (nm)
A	515.0	520.0
B	520.0	525.0
C	525.0	530.0
D	530.0	535.0

Emerald Green	Min. (nm)	Max. (nm)
A	552.5	555.5
B	555.5	558.5
C	558.5	561.5
D	561.5	564.5

Yellow Green	Min. (nm)	Max. (nm)
E	564.5	567.5
F	567.5	570.5
G	570.5	573.5
H	573.5	576.5

Color Bin Limits

Amber	Min. (nm)	Max. (nm)
A	582.0	584.5
B	584.5	587.0
C	587.0	589.5
D	589.5	592.0
E	592.0	594.5
F	594.5	597.0

Orange	Min. (nm)	Max. (nm)
A	597.0	600.0
B	600.0	603.0
C	603.0	606.0
D	606.0	609.0
E	609.0	612.0

Red Orange	Min. (nm)	Max. (nm)
A	611.0	616.0
B	616.0	620.0

Red	Min. (nm)	Max. (nm)
Full Distribution		

Tolerance of each bin limit = ± 1 nm.

chanhvinh.com

Packaging Option (X_8X_9)

Option	Test Current	Package Type	Reel Size
J1	20 mA	Top Mount	7 inch
J4	20 mA	Top Mount	13 inch
H1	20 mA	Reverse Mount	7 inch
H4	20 mA	Reverse Mount	13 inch
J2	10 mA	Top Mount	7 inch
J5	10 mA	Top Mount	13 inch
H2	10 mA	Reverse Mount	7 inch
H5	10 mA	Reverse Mount	13 inch
L2	2 mA	Top Mount	7 inch

Moisture Sensitivity

This product is qualified as Moisture Sensitive Level 2a per Jedec J-STD-020. Precautions when handling this moisture sensitive product is important to ensure the reliability of the product. Do refer to Avago Application Note AN5305 Handling of Moisture Sensitive Surface Mount Devices for details.

A. Storage before use

- Unopen moisture barrier bag (MBB) can be stored at <40°C/90%RH for 12 months. If the actual shelf life has exceeded 12 months and the HIC indicates that baking is not required, then it is safe to reflow the LEDs per the original MSL rating.
- It is not recommended to open the MBB prior to assembly (e.g. for IQC).

B. Control after opening the MBB

- The humidity indicator card (HIC) shall be read immediately upon opening of MBB.
- The LEDs must be kept at <30°C / 60%RH at all time and all high temperature related process including soldering, curing or rework need to be completed within 672 hours.

C. Control for unfinished reel

- For any unuse LEDs, they need to be stored in sealed MBB with desiccant or desiccator at <5%RH.

D. Control of assembled boards

- If the PCB soldered with the LEDs is to be subjected to other high temperature processes, the PCB need to be stored in sealed MBB with desiccant or desiccator at <5%RH to ensure no LEDs have exceeded their floor life of 672 hours.

E. Baking is required if:

- "10%" is Not blue and "5%" HIC indicator turns pink.
- The LEDs are exposed to condition of >30°C / 60% RH at any time.
- The LEDs floor life exceeded 672 hours.

Recommended baking condition: 60±5°C for 20 hours.

For product information and a complete list of distributors, please go to our website: **www.avagotech.com**

Avago, Avago Technologies, and the A logo are trademarks of Avago Technologies in the United States and other countries.
Data subject to change. Copyright © 2005-2015 Avago Technologies. All rights reserved. Obsoletes AV01-0040EN
AV02-0198EN - January 19, 2015