chanhvinh.com

HSMD-Cxxx, HSMG-Cxxx, HSMH-Cxxx, HSMS-Cxxx, HSMY-Cxxx,

Surface Mount Chip LEDs

Data Sheet



HSMx-C110/ HSMx-C120/HSMx-C150/HSMx-C170/HSMx-C177/ HSMx-C190/HSMx-C191/HSMx-C197/HSMx-C265

Description

These chip LEDs are designed in an industry standard package for ease of handling and use. Various different LED colors are available in nine compact, single color packages.

The HSMx-C150 has the industry standard 3.2 x 1.6 mm footprint that is excellent for all around use. The HSMx-C170 has the widely used 2.0 x 1.25 mm foot-print with 0.8 mm profile. The HSMx-C177 has the widely used 2.0 x 1.25 mm footprint with 0.4 mm profile. The HSMx-C19x series has the industry standard 1.6 x 0.8 mm footprint with varying profile to suit designers needs, the HSMx-C190 has 0.8 mm profile, the HSMx-C191 has a low profile of 0.6 mm, and the HSMx-C197 has the ultra low profile of 0.4 mm. This family with its thin profile and wide viewing angle makes this LED exceptional for back-lighting applications.

The HSMx-C110 is a right angle package with the universally accepted dimensions of 3.2 x 1.0 x 1.5 mm. The HSMx-C120 is a smaller right angle package with industry standard 1.6 x 0.6 x 1.0 mm. HSMx-C265 is a reverse mount package with dimensions of 3.4 x 1.25 x 1.1 mm. These devices are ideal for LCD backlighting and side-lighting applications.

In order to facilitate pick and place operation, these chip LEDs are shipped in tape and reel with 4000 units per reel for HSMx-C120, C170, C177, C190, C191, C197 packages, and 3000 units per reel for HSMx-C110, C150, C265 packages.

All packages are compatible with IR reflow solder processes. The small size and wide viewing angle make these LEDs prime choices for backlighting applications and front panel illumination especially where space is a premium.

Features

- Small size
- Industry standard footprint
- Compatible with IR solder
- Diffused optics
- Operating temperature range of -40°C to +85°C
- Right angle & reverse mount package available
- Various colors available
- Available in 8 mm tape on 7 in. (178 mm) diameter reels

Applications

- Keypad backlighting
- Push-button backlighting
- LCD backlighting
- Symbol backlighting
- Front panel indicator

chanhvinh.com

Device Selectiion Guide

GaP

Green	HER	Orange	Yellow	Description
HSMG-C110	HSMS-C110	HSMD-C110	HSMY-C110	Untinted, Non-Diffused
HSMG-C120	HSMS-C120	HSMD-C120	–	Untinted, Non-Diffused
HSMG-C150	HSMS-C150	HSMD-C150	HSMY-C150	Untinted, Diffused
HSMG-C170	HSMS-C170	HSMD-C170	HSMY-C170	Untinted, Diffused
HSMG-C177	HSMS-C177	HSMD-C177	HSMY-C177	Untinted, Diffused
HSMG-C190	HSMS-C190	HSMD-C190	HSMY-C190	Untinted, Diffused
HSMG-C191	HSMS-C191	HSMD-C191	HSMY-C191	Untinted, Diffused
HSMG-C197	HSMS-C197	HSMD-C197	HSMY-C197	Untinted, Diffused
HSMG-C265	–	–	–	Untinted, Non-Diffused

As AlGaAs

Red	Description
HSMH-C110	Untinted, Non-Diffused
HSMH-C120	Untinted, Non-Diffused
HSMH-C150	Untinted, Diffused
HSMH-C170	Untinted, Diffused
HSMH-C190	Untinted, Diffused
HSMH-C191	Untinted, Diffused
HSMH-C265	Untinted, Non-Diffused

Package Dimensions

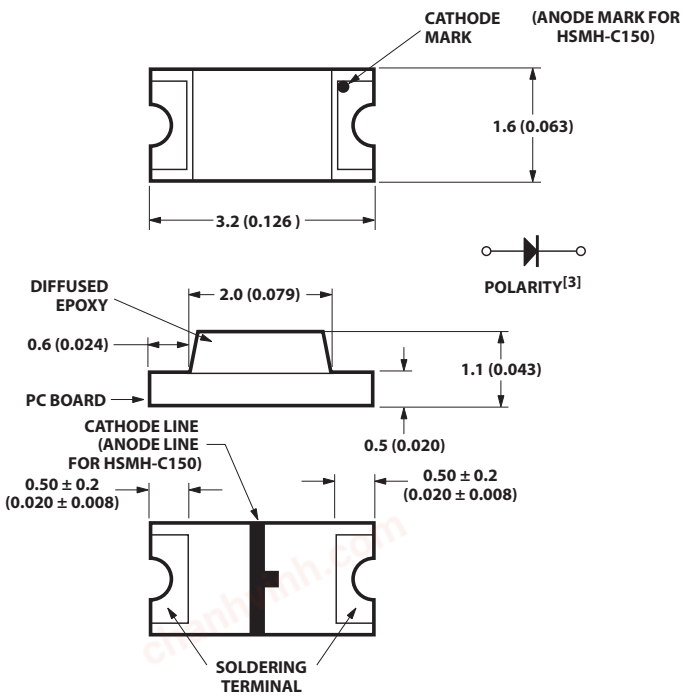

HSMx-C150

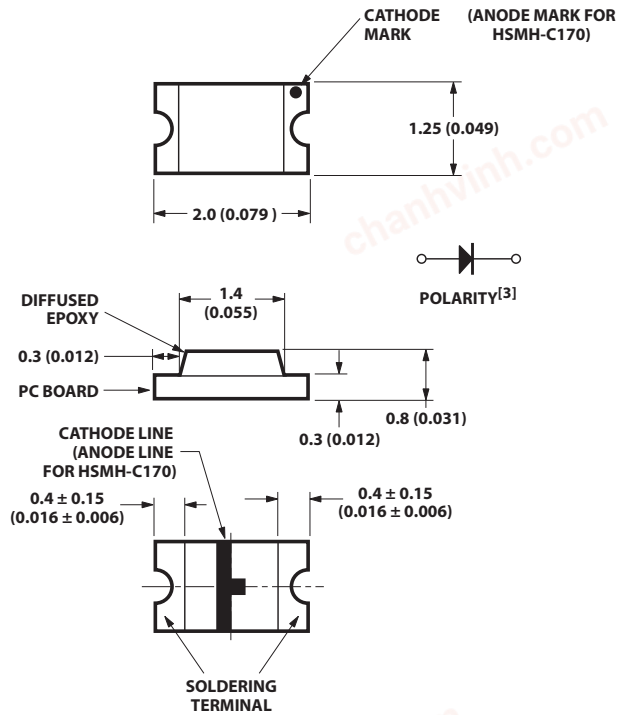

HSMx-C170

Notes:

1. All dimensions in millimeters (inches).
2. Tolerance is ±0.1 mm (±0.004 in.) unless otherwise specified.
3. Polarity for HSMH-Cxxx will be the opposite of what is shown on above drawings.

chanhvinh.com

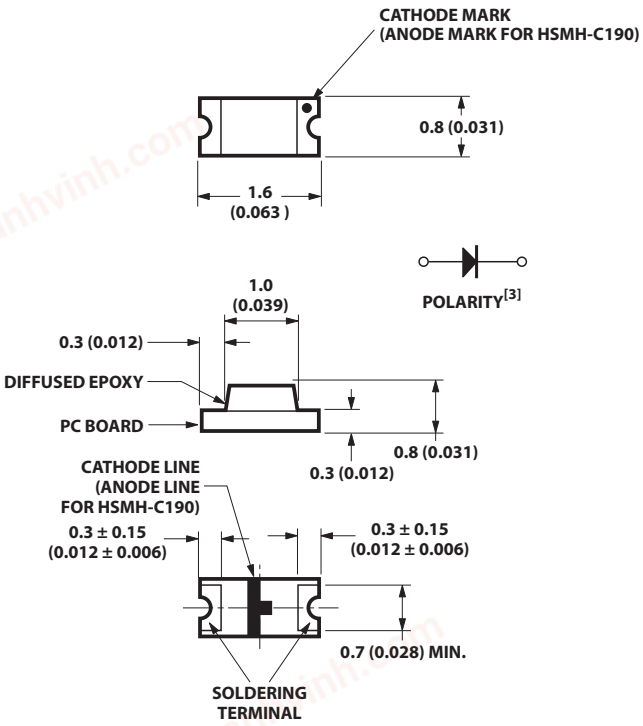

HSMx-C190

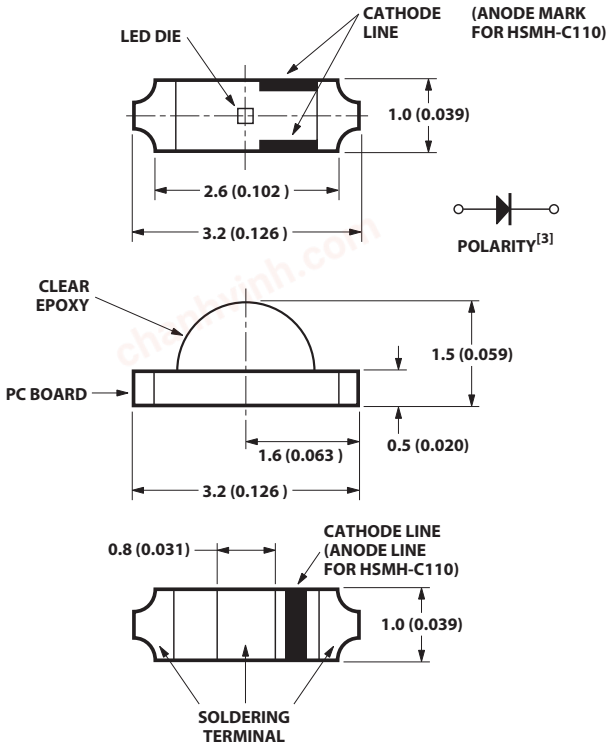

HSMx-C110

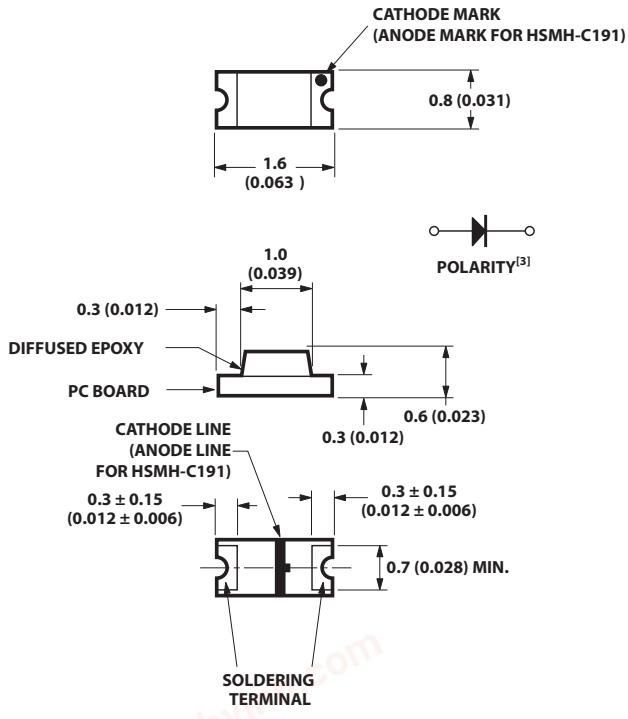

HSMx-C191

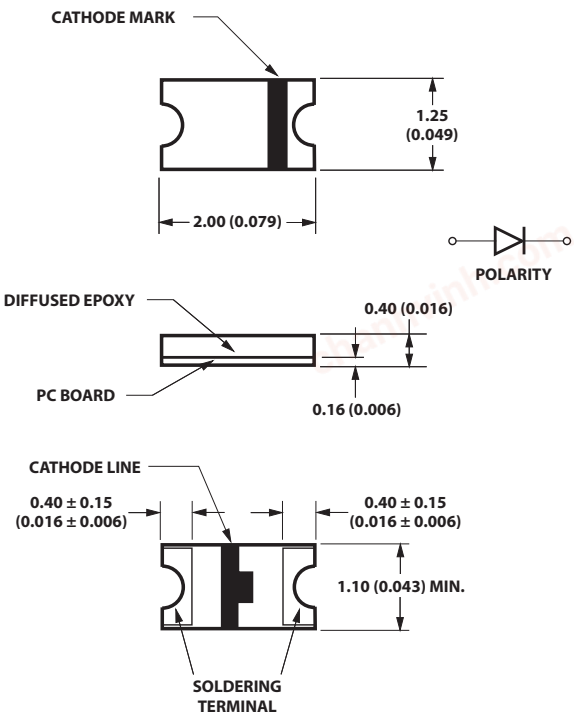

HSMx-C177

Notes:

1. All dimensions in millimeters (inches).
2. Tolerance is ±0.1 mm (±0.004 in.) unless otherwise specified.
3. Polarity for HSMH-Cxxx will be the opposite of what is shown on above drawings.

chanhvinh.com

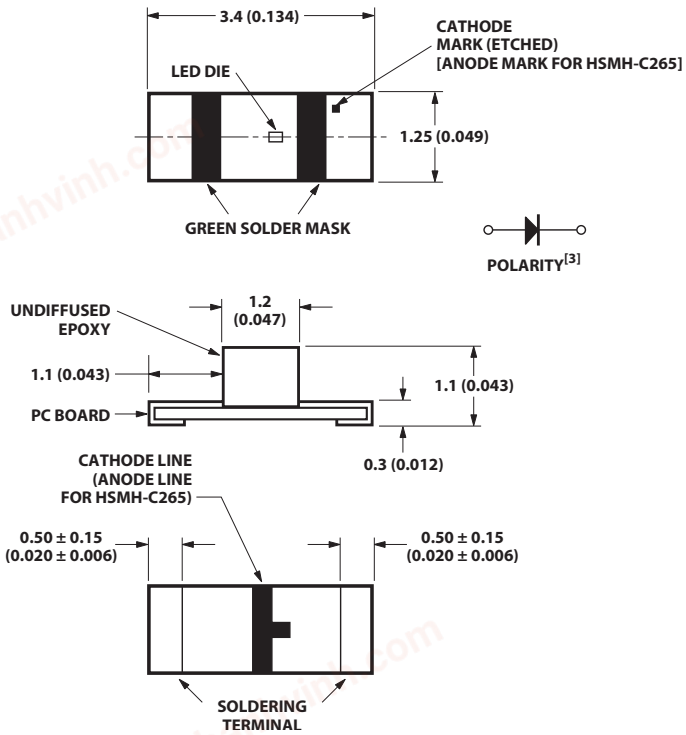

HSMx-C265

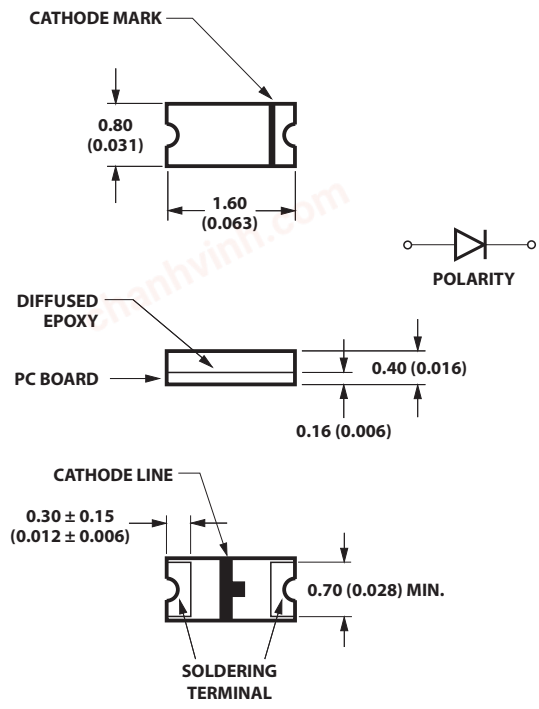

HSMx-C197

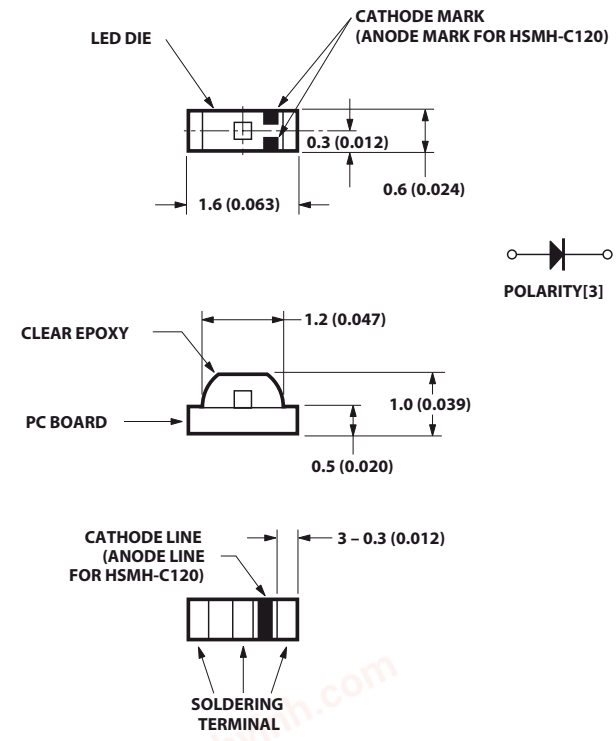

HSMx-C120

Notes:

1. All dimensions in millimeters (inches).
2. Tolerance is ±0.1 mm (±0.004 in.) unless otherwise specified.
3. Polarity for HSMH-Cxxx will be the opposite of what is shown on above drawings.

chanhvinh.com

Absolute Maximum Ratings for GaP at T_A=25°C

Parameter	C110/150/265	C120/170/177/190/191/197	Units
DC Forward Current[1]	25	20	mA
Power Dissipation	65	52	mW
Reverse Voltage (I_R=100 µA)	5	5	V
LED Junction Temperature	95	95	°C
Operating Temperature Range	-40 to +85	-40 to +85	°C
Storage Temperature Range	-40 to +85	-40 to +85	°C
Soldering Temperature	See reflow soldering profile (Figure 9 & 10)		

Absolute Maximum Ratings for AlGaAs at T_A=25°C

Parameter	C110/150	C120/170/190/191/265	Units
DC Forward Current[1]	30	25	mA
Power Dissipation	78	65	mW
Reverse Voltage (I_R=100µA)	5	5	V
LED Junction Temperature	95	95	°C
Operating Temperature Range	-40 to +85	-40 to +85	°C
Storage Temperature Range	-40 to +85	-40 to +85	°C
Soldering Temperature	See reflow soldering profile (Figure 9 & 10)		

Note:
1. Derate linearly as shown in Figure 4 for temperature above 25°C.

Electrical Characteristics at T_A=25°C

Part Number	Color	Forward Voltage V_F(Volts) @ I_F = 20 mA		Reverse Breakdown V_R(Volts) @ I_R = 100 µA	Capacitance C(pF), @ V_F = 0 V, f = 1 MHz	Thermal Resistance $R\theta_{J-P}$ (°C/W)
		Typ.	Max.	Min.	Typ.	Typ.
HSMS-C110/150	HER	2.1	2.6	5	5	400
HSMS-C120						350
HSMS-C170/177/190/191/197						250
HSMD-C110/150	Orange	2.2	2.6	5	7	400
HSMD-C120						350
HSMD-C170/177/190/191/197						250
HSMY-C110/150	Yellow	2.1	2.6	5	6	400
HSMY-C170/177/190/191/197						250
HSMG-C110/150	Green	2.2	2.6	5	9	400
HSMG-C120						350
HSMG-C170/177/190191/197/265						250
HSMH-C110/150	AlGaAs	1.8	2.6	5	18	460
HSMH-C120						400
HSMH-C170/190/191/265						300

chanhvinh.com

Optical Characteristics at T_A=25°C

Part Number	Color	Luminous Intensity[1] Iv(mcd)@20mA		Peak Wavelength λ_{peak}(nm)	Dominant Wavelength λ_d(nm)	Viewing Angle $2\theta_{1/2}$(°)[2]
		Min.	Typ.	Typ.	Typ.	Typ.
HSMG-C110/177/197	Green	4.5	15.0	570	572	130
HSMG-C120						155
HSMG-C150/170/190/191/265						170
HSMS-C110/177/197	HER	2.8	10.0	630	626	130
HSMS-C120						155
HSMS-C150/170/190/191						170
HSMD-C110/177/197	Orange	2.8	8.0	605	604	130
HSMD-C120						155
HSMD-C150/170/190/191						170
HSMY-C110/177/197	Yellow	2.8	8.0	589	586	130
HSMY-C150/170/190/191						170
HSMH-C110	AlGaAs	7.2	17.0	660	639	130
HSMH-C120						155
HSMH-C150/170/190/191/265						170

Notes:
1. The luminous intensity, Iv, is measured at the peak of the spatial radiation pattern, which may not be aligned with the mechanical axis of the lamp package.
2. $\theta_{1/2}$ is the off-axis angle where the luminous intensity is 1/2 the peak intensity.

Color Bin Limits[1]

Green Color Bins[1]

Bin ID	Dom. Wavelength (nm) Min.	Max.
A	561.5	564.5
B	564.5	567.5
C	567.5	570.5
D	570.5	573.5
E	573.5	576.5

Tolerance: ±1 nm

Yellow Color Bins[1]

Bin ID	Dom. Wavelength (nm) Min.	Max.
A	582.0	584.5
B	584.5	587.0
C	587.0	589.5
D	589.5	592.0
E	592.0	594.5
F	594.5	597.0

Tolerance: ±1 nm

Orange Color Bins[1]

Bin ID	Dom. Wavelength (nm) Min.	Max.
A	597.0	600.0
B	600.0	603.0
C	603.0	606.0
D	606.0	609.0
E	609.0	612.0
F	612.0	615.0

Tolerance: ±1 nm

chanhvinh.com

Light Intensity (Iv) Bin Limits[1]

Bin ID	Intensity (mcd) Min.	Max.	Bin ID	Intensity (mcd) Min.	Max.
A	0.11	0.18	N	28.50	45.00
B	0.18	0.29	P	45.00	71.50
C	0.29	0.45	Q	71.50	112.50
D	0.45	0.72	R	112.50	180.00
E	0.72	1.10	S	180.00	285.00
F	1.10	1.80	T	285.00	450.00
G	1.80	2.80	U	450.00	715.00
H	2.80	4.50	V	715.00	1125.00
J	4.50	7.20	W	1125.00	1800.00
K	7.20	11.20	X	1800.00	2850.00
L	11.20	18.00	Y	2850.00	4500.00
M	18.00	28.50			

Tolerance: ±15%

Note:

1. Bin categories are established for classification of products. Products may not be available in all categories. Please contact your Avago representative for information on currently available bins.
2. The Iv binning specification set-up is for lowest allowable Iv binning only. There is no upper Iv bin limits.

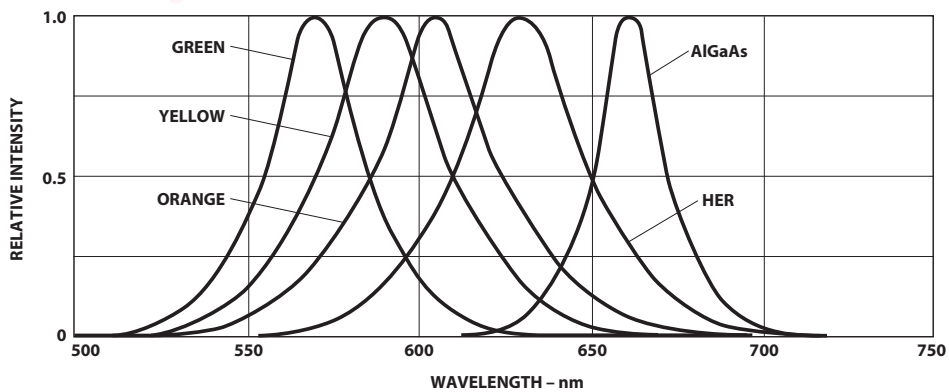

Figure 1. Relative intensity vs. wavelength.

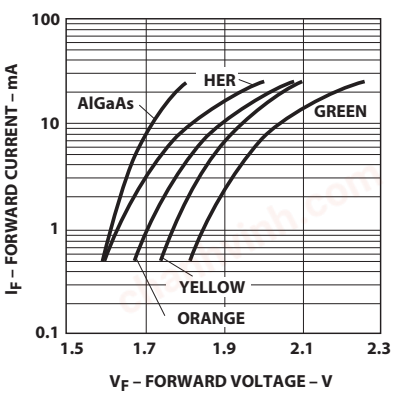

Figure 2. Forward current vs. forward voltage.

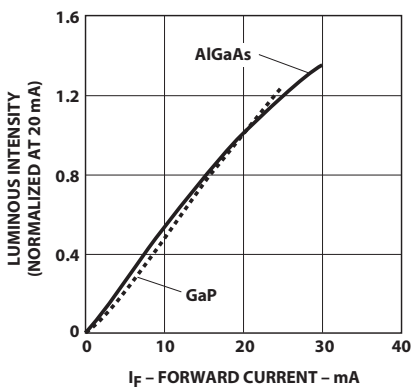

Figure 3. Luminous intensity vs. forward current.

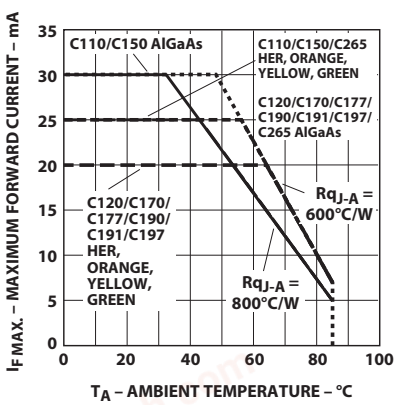

Figure 4. Maximum forward current vs. ambient temperature.

chanhvinh.com

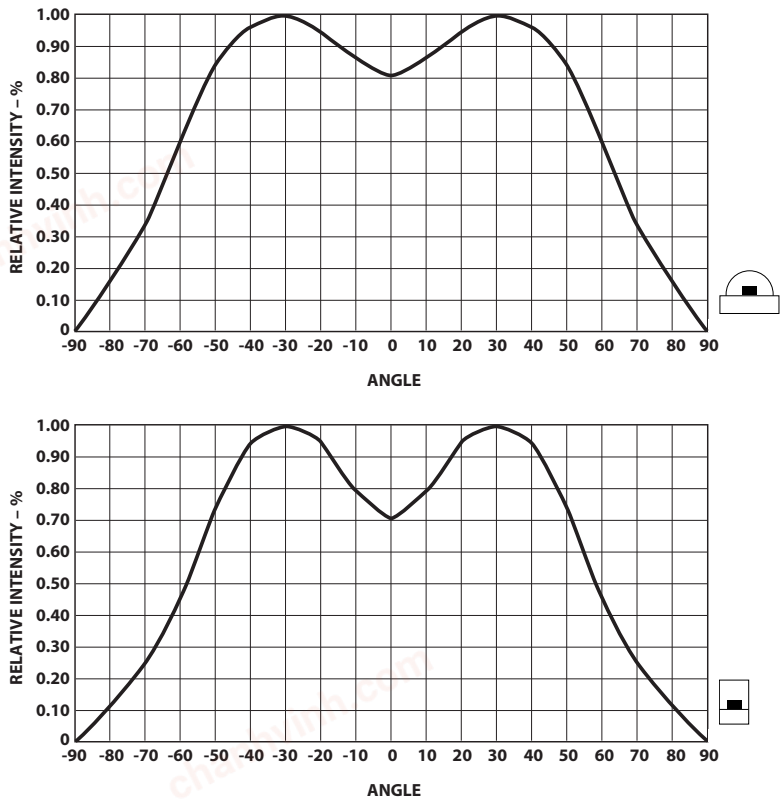

Figure 5. Relative intensity vs. angle for HSMx-C110.

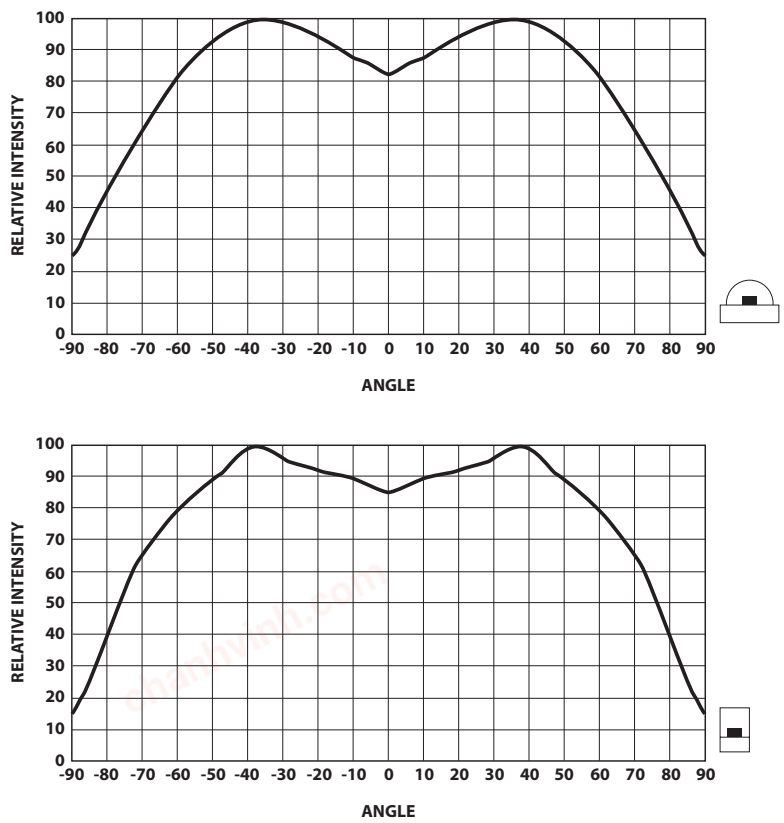

Figure 6. Relative intensity vs. angle for HSMx-C120.

chanhvinh.com

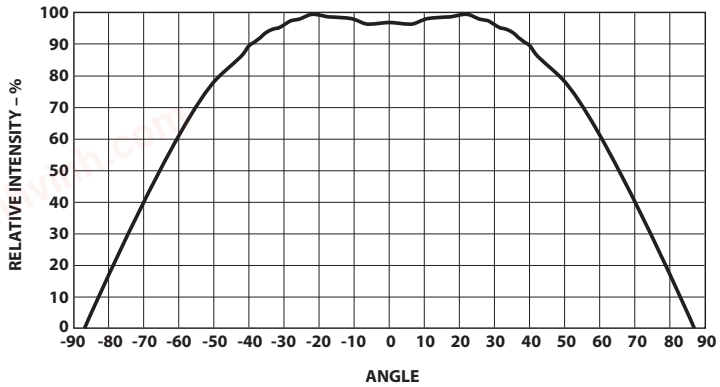

Figure 7. Relative intensity vs. angle for HSMx-C177 and C197.

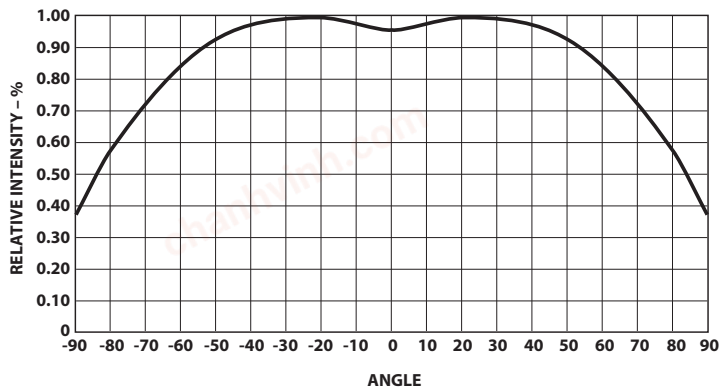

Figure 8. Relative intensity vs. angle for HSMx-C150, C170, C190, C191 and C265.

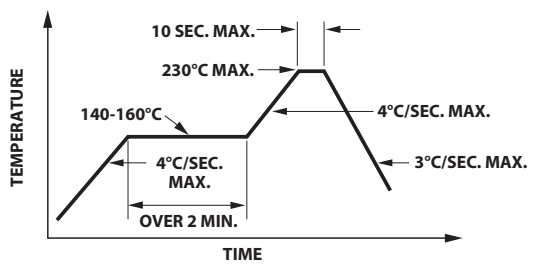

Figure 9. Recommended reflow soldering profile.

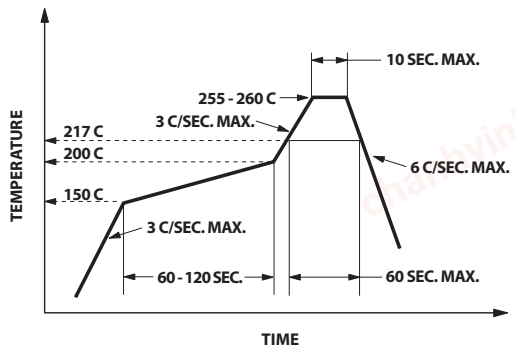

Figure 10. Recommended Pb-free reflow soldering profile.

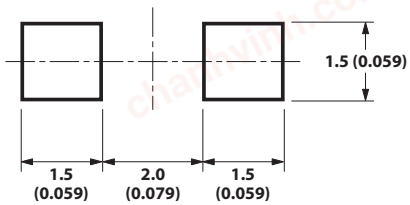

Figure 11. Recommended soldering pattern for HSMx-C150.

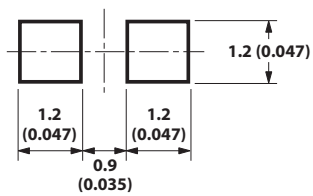

Figure 12. Recommended soldering pattern for HSMx-C170 and C177.

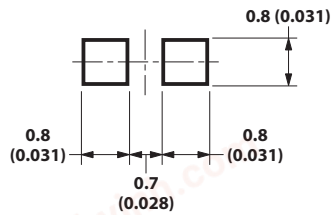

Figure 13. Recommended soldering pattern for HSMx-C190, C191 and C197.

chanhvinh.com

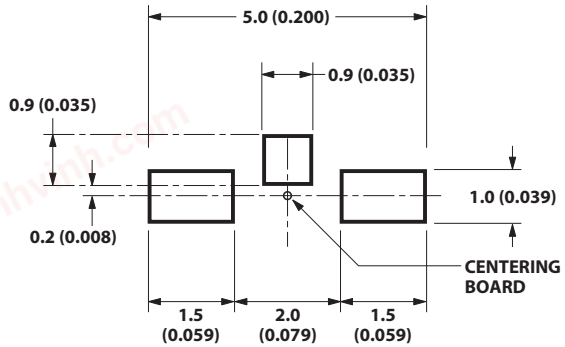

Figure 14. Recommended soldering pattern for HSMx-C110.

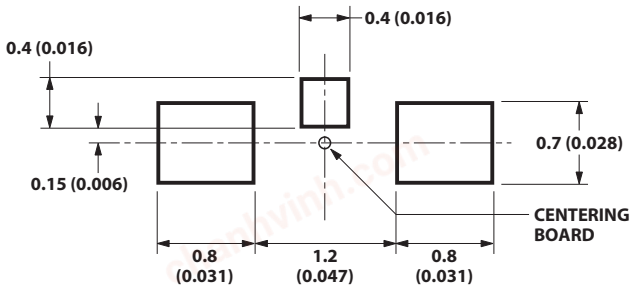

Figure 15. Recommended soldering pattern for HSMx-C120.

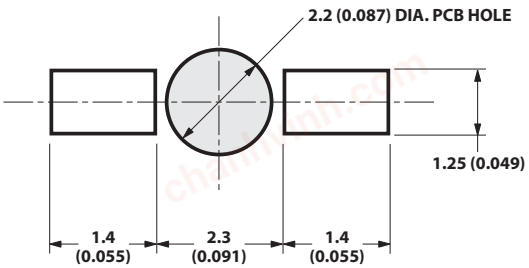

Figure 16. Recommended soldering pattern for HSMx-C265.

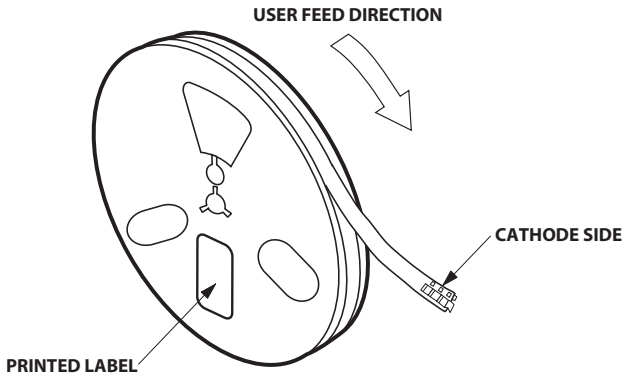

Figure 17. Reeling orientation.

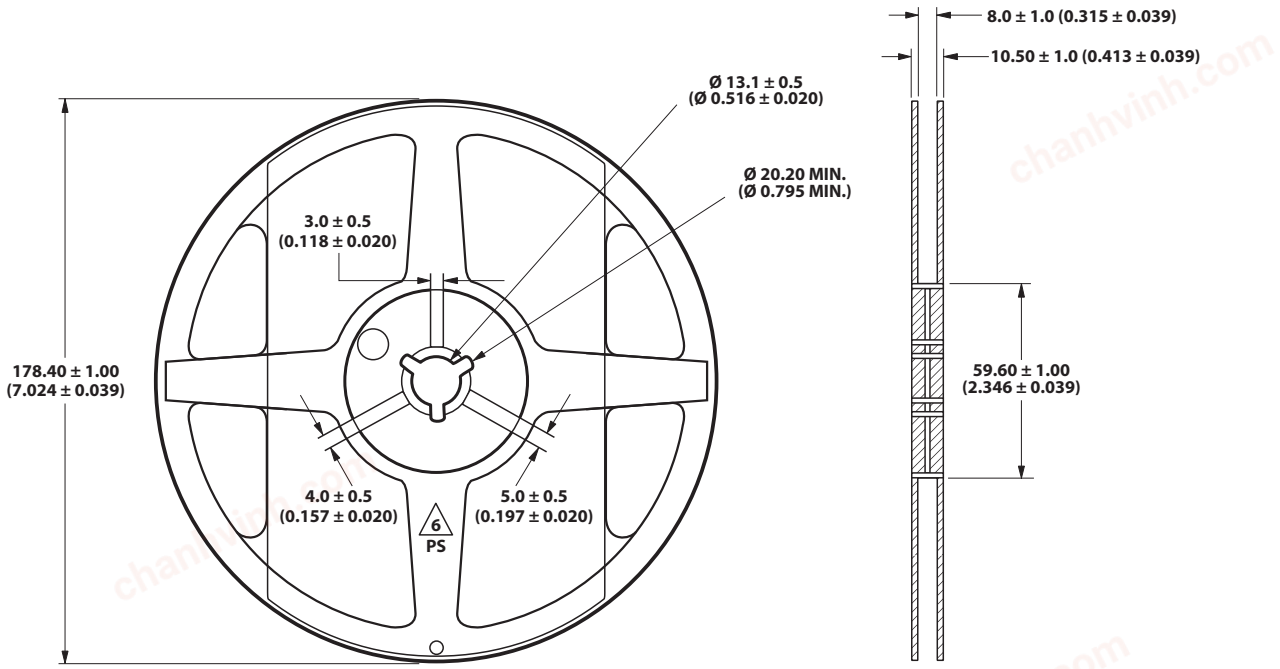

Figure 18. Reel dimensions.

Note: All dimensions in millimeters (inches).

chanhvinh.com

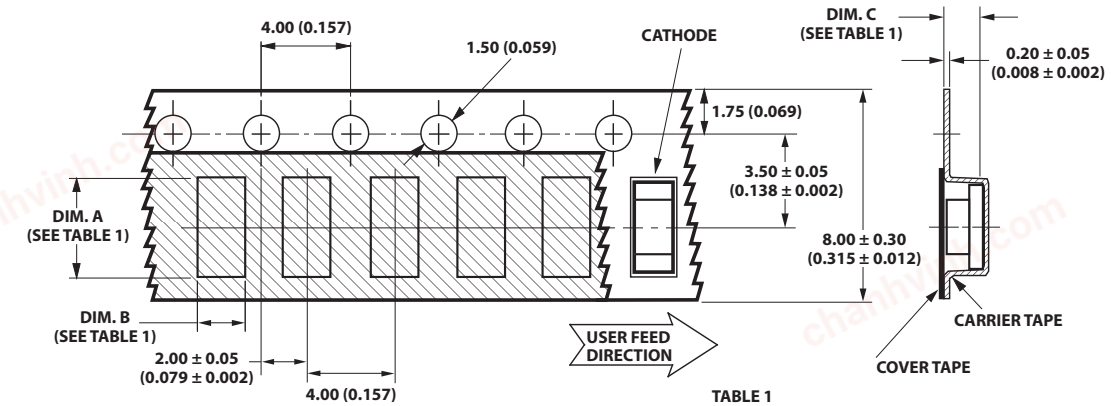

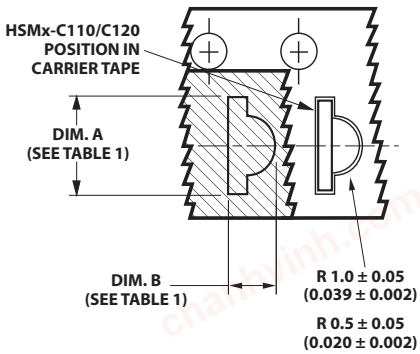

TABLE 1
DIMENSIONS IN MILLIMETERS (INCHES)

PART NUMBER	DIM. A ± 0.10 (0.004)	DIM. B ± 0.10 (0.004)	DIM. C ± 0.10 (0.004)
HSMx-C110 SERIES	3.40 (0.134)	1.70 (0.067)	1.20 (0.047)
HSMx-C120 SERIES	1.90 (0.075)	1.15 (0.045)	0.75 (0.030)
HSMx-C150 SERIES	3.50 (0.138)	1.88 (0.074)	1.27 (0.050)
HSMx-C170 SERIES	2.30 (0.091)	1.45 (0.057)	0.95 (0.037)
HSMx-C177 SERIES	2.30 (0.091)	1.40 (0.055)	0.60 (0.024)
HSMx-C190 SERIES	1.75 (0.069)	0.90 (0.035)	0.90 (0.035)
HSMx-C191 SERIES	1.86 (0.073)	0.89 (0.035)	0.87 (0.034)
HSMx-C197 SERIES	1.75 (0.069)	0.95 (0.037)	0.60 (0.024)

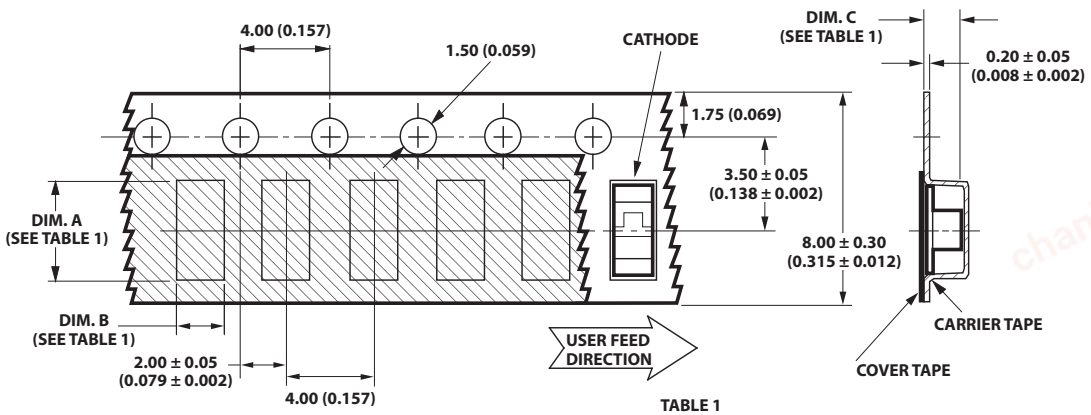

TABLE 1
DIMENSIONS IN MILLIMETERS (INCHES)

PART NUMBER	DIM. A ± 0.10 (0.004)	DIM. B ± 0.10 (0.004)	DIM. C ± 0.10 (0.004)
HSMx-C265 SERIES	3.70 (0.146)	1.45 (0.057)	1.30 (0.051)

Figure 19. Tape dimensions.

chanhvinh.com

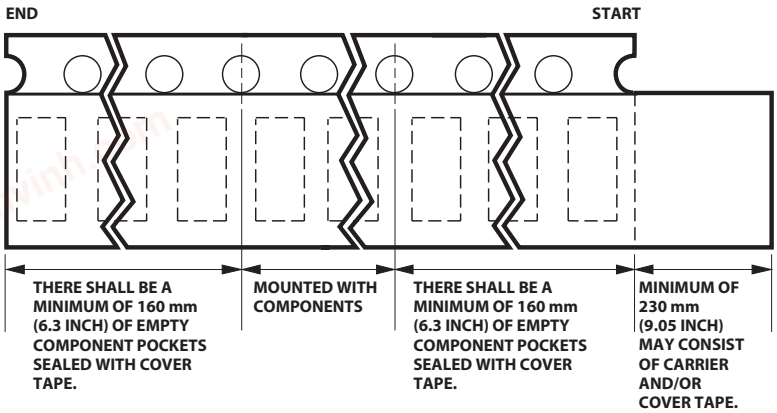

Figure 20. Tape leader and trailer dimensions.

Notes:

1. All dimensions in millimeters (inches).
2. Tolerance is ±0.1 mm (±0.004 in.)unless otherwise specified.

Storage Condition: 5 to 30˚ C @ 60% RH max.

Baking is required under the condition:

a) Humidity Indicator Card is >10% when read at 23 ± 5°C.
b) Device exposed to factory conditions <30°C/60% RH more than 672 hours.

Baking recommended condition: 60 +/– 5˚C for 20 hours.

Convective IR Reflow Soldering

For more information on IR reflow soldering, refer to Application Note 1060, *Surface Mounting SMT LED Indicator Components.*

Avago, Avago Technologies, and the A logo are trademarks of Avago Technologies in the United States and other countries.
Data subject to change. Copyright © 2005-2012 Avago Technologies. All rights reserved. Obsoletes 5989-4806EN
AV02-0551EN - March 5, 2012