chanhvinh.com

BROADCOM®

Data Sheet

HSMx-A4xx-xxxxx

SMT LED Surface-Mount LED Indicator



Description

The Broadcom® Power PLCC-4 is an extension of our PLCC2 SMT LEDs. The package can be driven at higher current due to its superior package design. The product is able to dissipate heat more efficiently compared to the conventional PLCC-2 SMT LEDs. In proportion to the increase in driving current, this family of LEDs is able to produce higher light output compared to the conventional PLCC-2 SMT LEDs.

These SMT LEDs have higher reliability and better performance and are designed to work under a wide range of environmental conditions. This higher reliability makes them suitable for use under harsh environment and conditions like automotive. In addition, they are also suitable to be used in electronic signs and signals.

To facilitate easy pick and place assembly, the LEDs are packed in EIA-compliant tape and reel. Every reel will be shipped in single intensity and color bin (except for red color), to provide close uniformity.

These LEDs are compatible with IR solder reflow process. Due to the high reliability feature of these products, they also can be mounted using through-the-wave soldering process.

There are a variety of colors and various viewing angles (30°, 60°, and 120°) available in these SMT LEDs. Ideally, the 30° parts are suitable for light piping where focused intensities are required. As for the 60° and 120°, they are most suitable for automotive interior and exterior lighting and electronic signs applications.

Features

- Industry standard PLCC-4
- High reliability LED package
- High brightness using AlInGaP and InGaN dice technologies
- High optical efficiency
- Higher ambient temperature at the same current possible compared to PLCC-2
- Available in full selection of colors
- Super wide viewing angle at 120°
- Available in 8-mm carrier tape on 7-inch reel
- Compatible with both IR and TTW soldering process
- JEDEC MSL 2a
- High reliability LED package due to enhanced silicone resin material for InGaN family

Applications

- Interior automotive
  - Instrument panel backlighting
  - Central console backlighting
  - Cabin backlighting
  - Navigation and audio system
  - Dome lighting
  - Push button backlighting
- Exterior automotive00
  - Turn signals
  - CHMSL
  - Rear combination lamp
  - Puddle light
- Electronic signs and signals
  - Interior full color sign
  - Variable message sign

chanhvinh.com

- Office automation, home appliances, industrial equipment
  - Front panel backlighting
  - Push button backlighting
  - Display backlighting

Figure 1: Package Dimensions

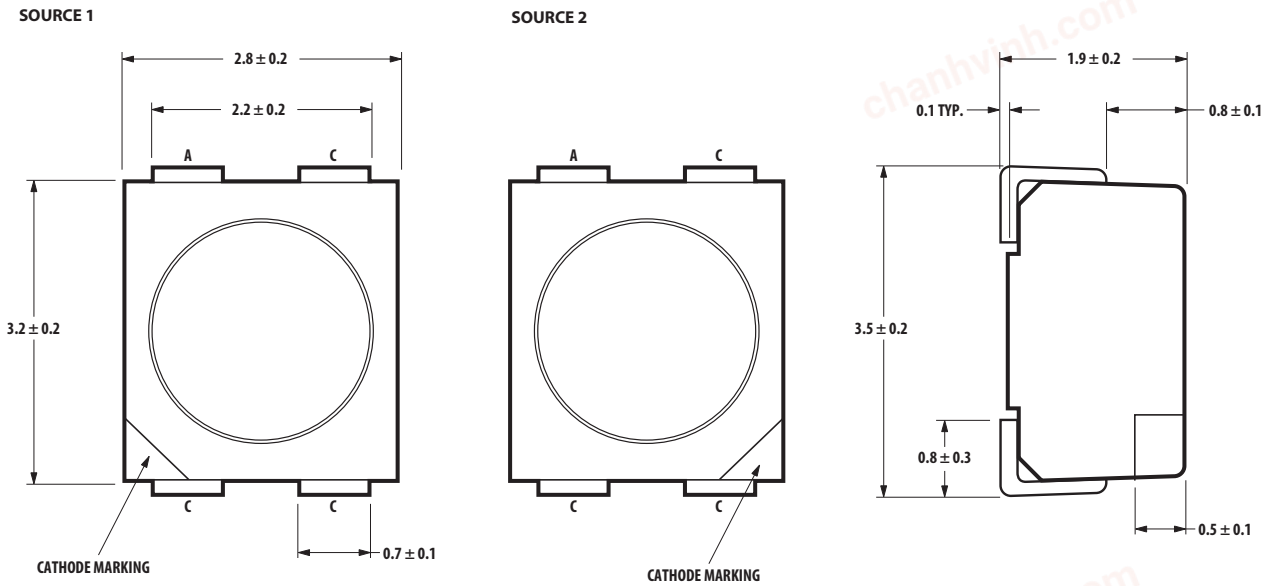

NOTE: All dimensions in millimeters. Electrical connection between all cathodes is recommended.

Device Selection Guide

Color	Part Number	Min. I_V (mcd)[a]	Max. I_V (mcd)	Test Current (mA)	Dice Technology
Red	HSMC-A400-S30M1	180.00	355.00	50	AlInGaP
	HSMC-A400-V00M1	715.00	—	50	AlInGaP
	HSMC-A401-U80M1	560.00	1400.00	50	AlInGaP
Red Orange	HSMJ-A401-T40M1	285.00	715.00	50	AlInGaP
	HSMJ-A401-U40M1	450.00	1125.00	50	AlInGaP
	HSMJ-A400-W00M1	1125.00	—	50	AlInGaP
Orange	HSML-A401-U40M1	450.00	1125.00	50	AlInGaP
Amber	HSMA-A401-U45M1	450.00	1125.00	50	AlInGaP
	HSMA-A400-V00M1	715.00	—	50	AlInGaP
Emerald Green	HSME-A401-P4PM1	45.00	112.50	50	AlInGaP
Blue	HSMN-A400-S8QM2	224.00	560.00	30	InGaN
	HSMN-A400-S8PM2	224.00	560.00	30	InGaN
	HSMN-A400-S4QM2	180.00	450.00	30	InGaN
	HSMN-A400-T8PM2	355.00	900.00	30	InGaN
Green	HSMM-A400-W8QM2	1400.00	3550.00	30	InGaN
	HSMM-A400-W8YM2	1400.00	3550.00	30	InGaN

a. The luminous intensity I_V, is measured at the mechanical axis of the lamp package. The actual peak of the spatial radiation pattern may not be aligned with this axis. I_V tolerance = ±12%.

chanhvinh.com

Part Numbering System

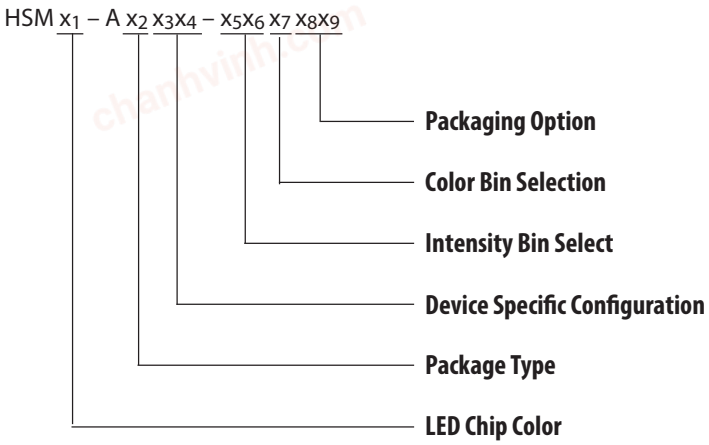

Absolute Maximum Ratings (T_A = 25°C)

Parameters	HSMC/J/L/A/E	HSMZ/V/U	HSMM/N
DC Forward Current[a]	70 mA[b, c]	70 mA[b, c]	30 mA
Peak Forward Current[d]	200 mA	200 mA	90 mA
Power Dissipation	180 mW	240 mW	114 mW
Reverse Voltage	5V		
Junction Temperature	110°C		
Operating Temperature	–40°C to +100°C		
Storage Temperature	–40°C to +100°C		

a. Derate linearly as shown in Figure 6.

b. Drive current between 10 mA and 70 mA is recommended for best long-term performance.

c. Operation at currents below 5 mA is not recommended.

d. Duty factor = 10%, Frequency = 1 kHz.

chanhvinh.com

Optical Characteristics (T_A = 25°C)

Color	Part Number	Peak Wavelength λ_{PEAK} (nm) Typ.	Dominant Wavelength λ_D[a] (nm) Typ.	Viewing Angle $2\Theta_{1/2}$[b] (Degrees) Typ.	Luminous Efficacy η_V[c] (lm/W) Typ.	Luminous Intensity/Total Flux I_V (mcd)/Φ_V (mlm) Typ.
Red	HSMC	635	626	120	150	0.45
	HSMZ	639	630	120	155	0.45
Red Orange	HSMJ	621	615	120	240	0.45
	HSMV	623	617	120	263	0.45
Orange	HSML	609	605	120	320	0.45
Amber	HSMA	592	590	120	480	0.45
	HSMU	594	592	120	500	0.45
Yellow Green	HSME	576	575	120	560	0.45
Emerald Green	HSME	568	567	120	610	0.45
Green	HSMM	518	525	120	500	0.45
Blue	HSMN	468	470	120	75	0.45

a. The dominant wavelength, λ_D, is derived from the CIE Chromaticity Diagram and represents the color of the device.

b. $\Theta_{1/2}$ is the off-axis angle where the luminous intensity is 1/2 the peak intensity.

c. Radiant intensity, I_e in watts/steradian, may be calculated from the equation $I_e = I_v/\eta_v$, where I_v is the luminous intensity in candelas and η_v is the luminous efficacy in lumens/watt.

Electrical Characteristics (T_A = 25°C)

Part Number	Forward Voltage V_F (Volts) at I_F = 50 mA		Reverse Voltage V_R at 100 µA
	Typ.	Max.	Min.
HSMC/J/L/A/E	2.2	2.5	5
HSMZ/V/U	2.8	3.4	5
Part Number	**Forward Voltage V_F (Volts) at I_F = 30 mA**		**Reverse Voltage V_R at 10 µA**
	Typ.	**Max.**	**Min.**
HSMM/N	3.8	4.6	5

chanhvinh.com

Figure 2: Relative Intensity vs. Wavelength

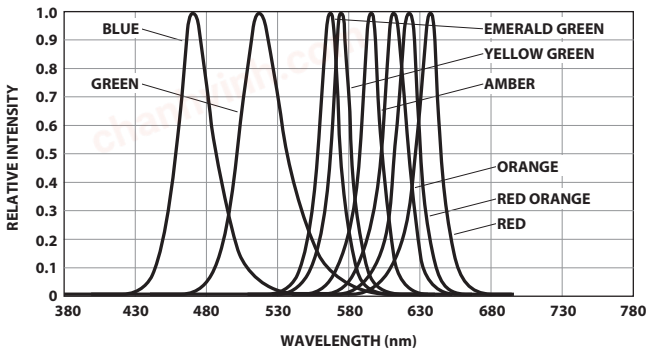

Figure 3: Forward Current vs. Forward Voltage

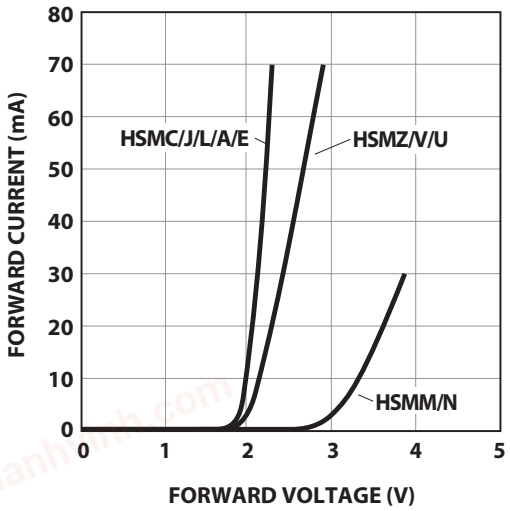

Figure 4: Relative Intensity vs. Forward Current (AlInGaP)

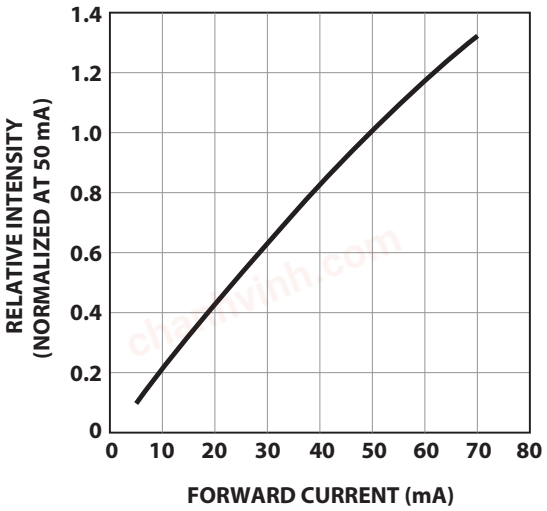

Figure 5: Relative Intensity vs. Forward Current (InGaN)

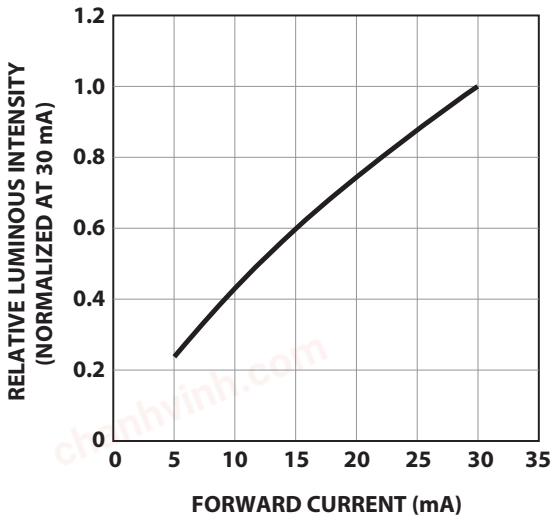

Figure 6: Maximum Forward Current vs. Ambient Temperature, Derated Based on $T_J$max = 110°C (AlInGaP)

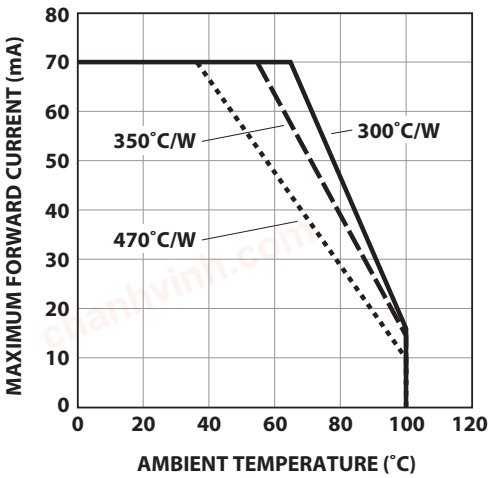

chanhvinh.com

Figure 7: Maximum Forward Current vs. Ambient Temperature, Derated Based on $T_J$max = 110°C (InGaN)

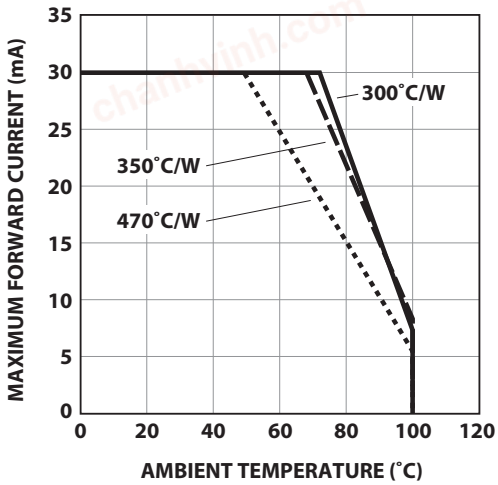

Figure 8: Dominant Wavelength vs. Forward Current – InGaN Devices

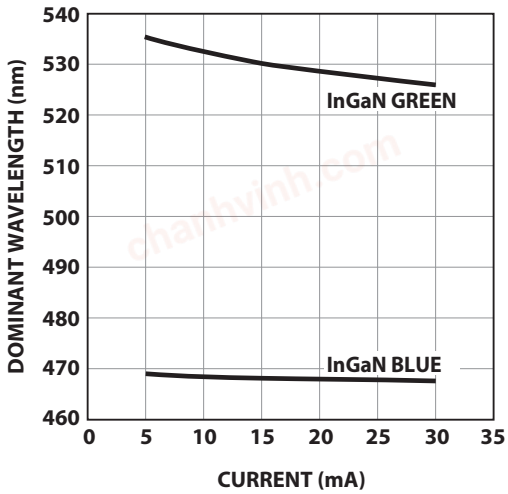

Figure 9: Radiation Pattern

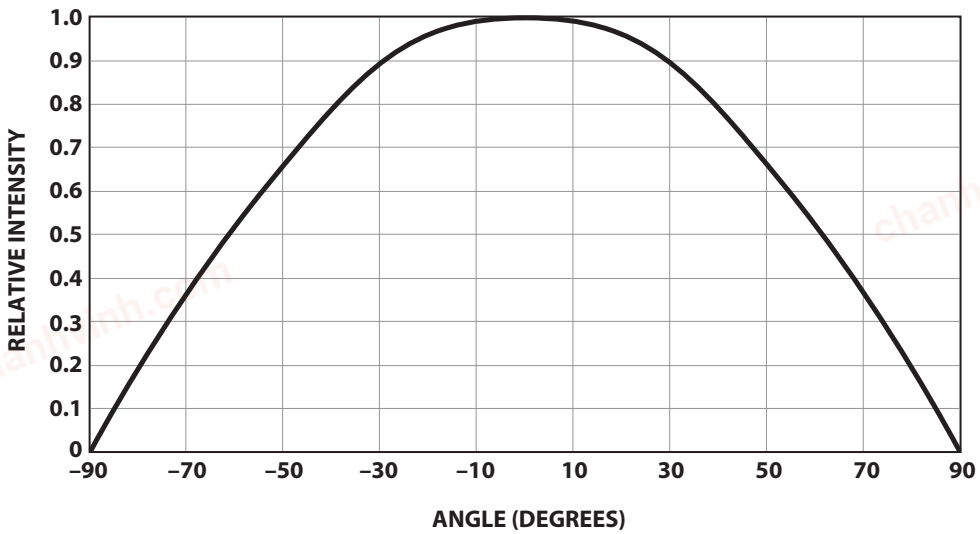

chanhvinh.com

Figure 10: Recommended Soldering Pad Pattern

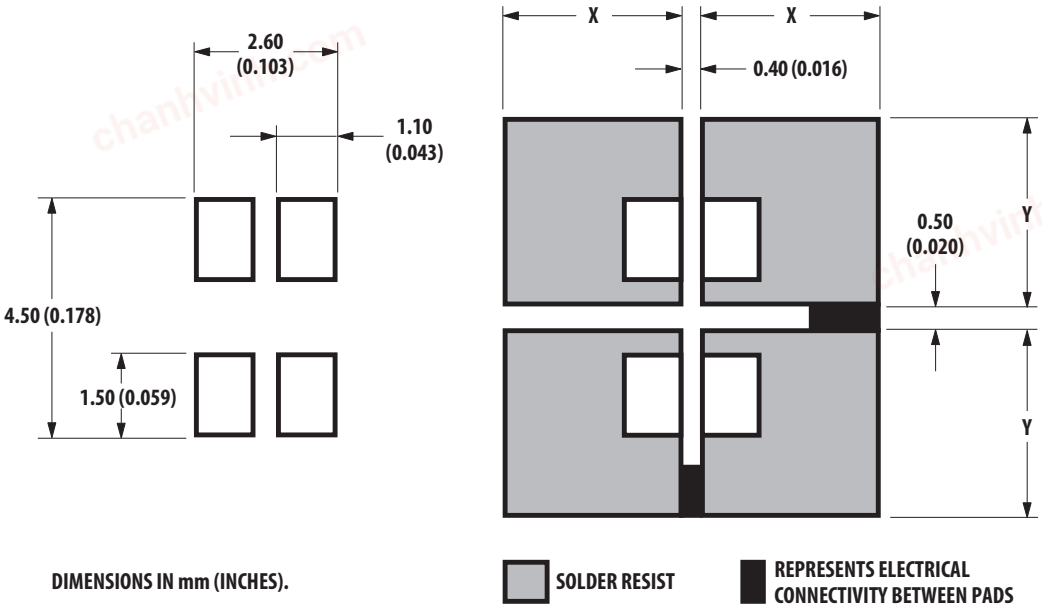

Figure 11: Recommended Soldering Pad Pattern (TTW)

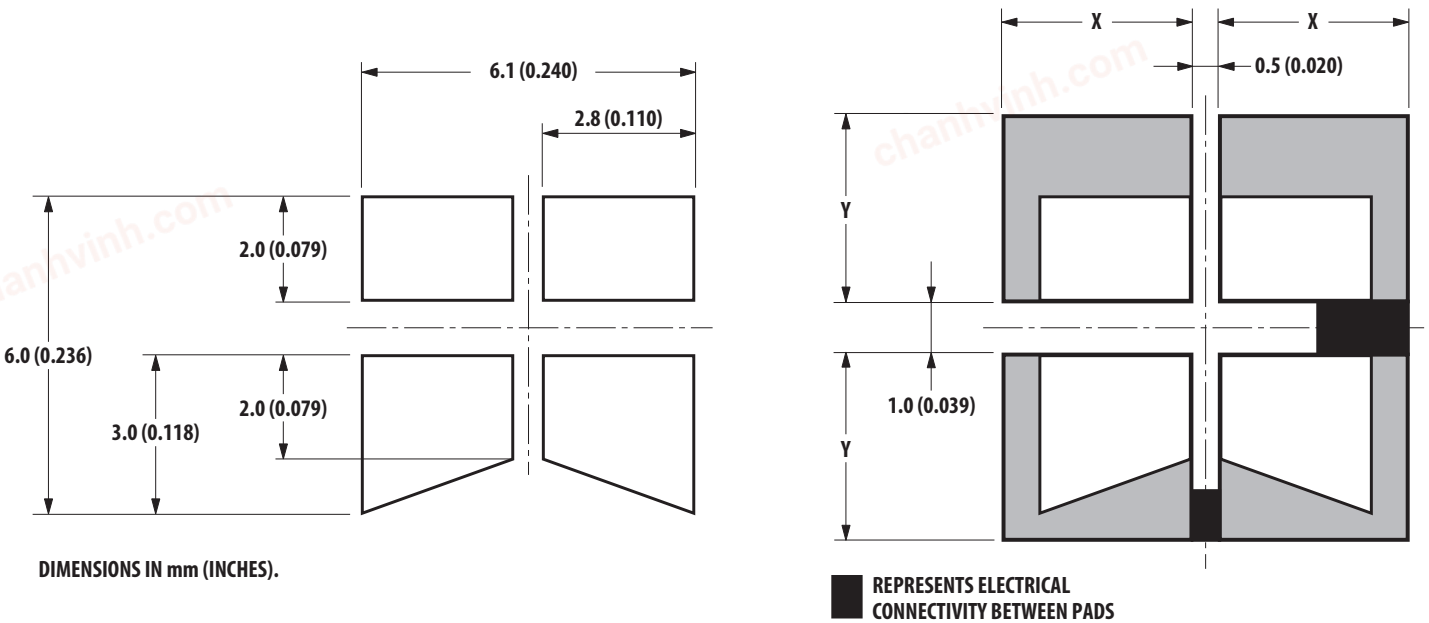

chanhvinh.com

Figure 12: Recommended Pb-Free Reflow Soldering Profile

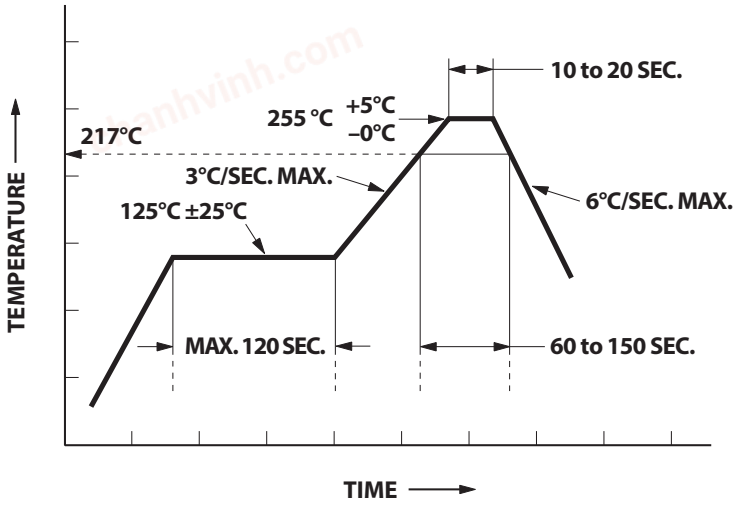

*** THE TIME FROM 25°C TO PEAK TEMPERATURE = 6 MINUTES MAX.**

NOTE: For detailed information on reflow soldering of Broadcom surface-mount LEDs, refer to Application Note AN 1060, *Surface Mounting SMT LED Indicator Components*.

Figure 13: Tape Leader and Trailer Dimensions

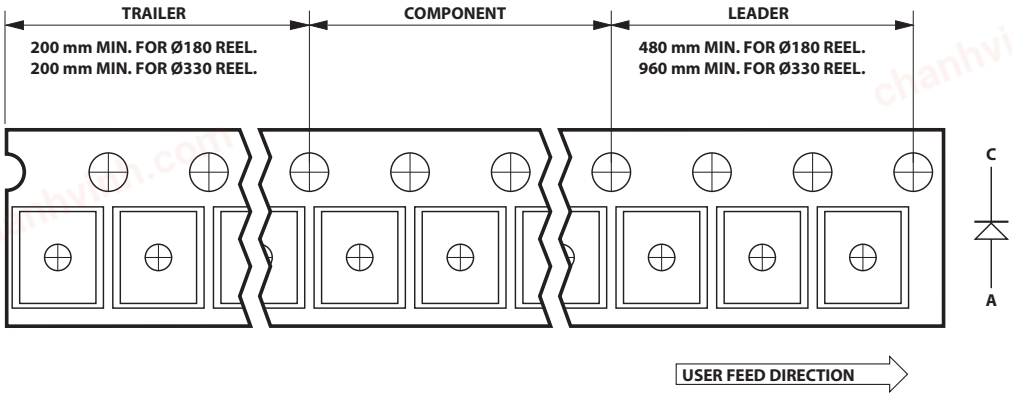

chanhvinh.com

Figure 14: Tape Dimensions

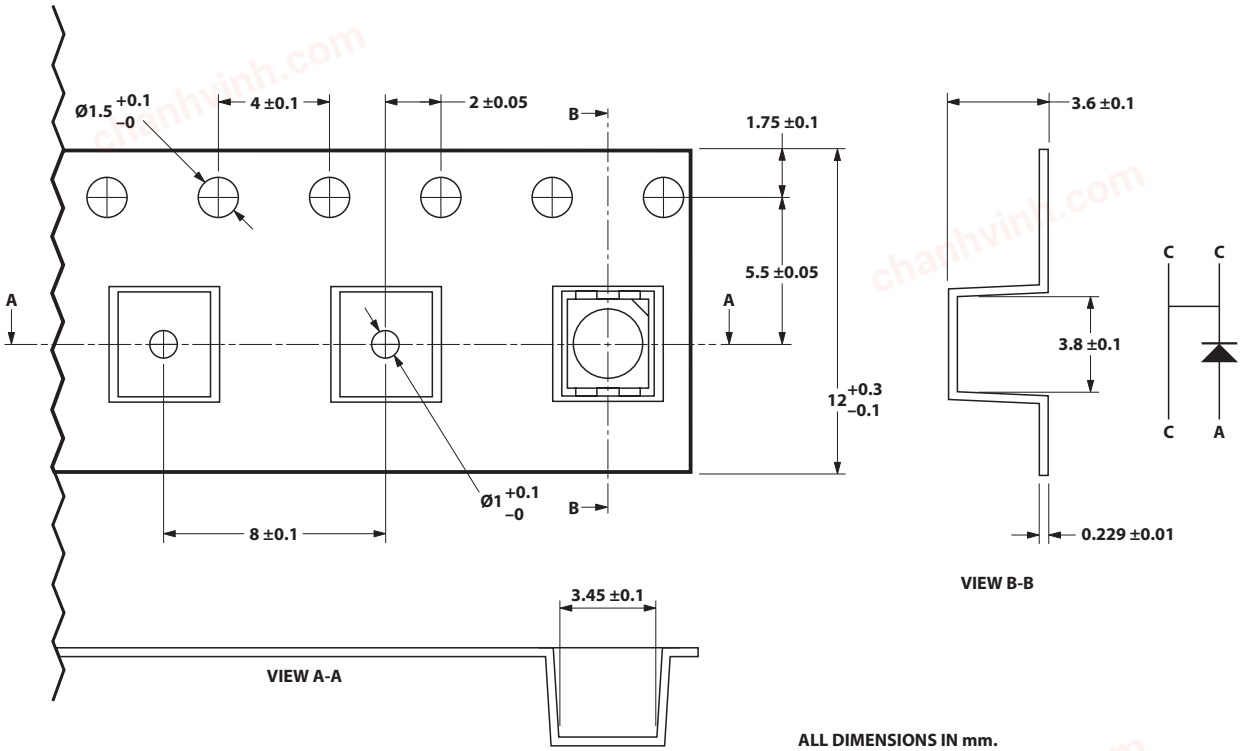

Figure 15: Recommended Pb-Free Reflow Soldering Profile

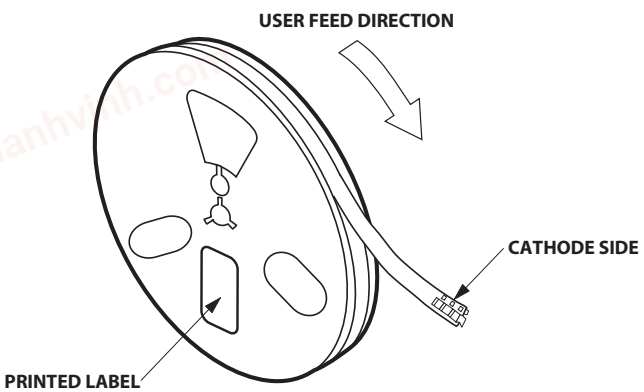

chanhvinh.com

Bin Information

Intensity Bin Select (X_5X_6)

Individual reel will contain parts from one half bin only.

X_5	Min. I_V Bin
X_6	
0	Full Distribution
2	2 half bins starting from $X_5$1
3	3 half bins starting from $X_5$1
4	4 half bins starting from $X_5$1
5	5 half bins starting from $X_5$1
6	2 half bins starting from $X_5$2
7	3 half bins starting from $X_5$2
8	4 half bins starting from $X_5$2
9	5 half bins starting from $X_5$2

Intensity Bin Limits

Bin ID	Min. (mcd)	Max. (mcd)
N1	28.50	35.50
N2	35.50	45.00
P1	45.00	56.00
P2	56.00	71.50
Q1	71.50	90.00
Q2	90.00	112.50
R1	112.50	140.00
R2	140.00	180.00
S1	180.00	224.00
S2	224.00	285.00
T1	285.00	355.00
T2	355.00	450.00
U1	450.00	560.00
U2	560.00	715.00
V1	715.00	900.00
V2	900.00	1125.00
W1	1125.00	1400.00
W2	1400.00	1800.00
X1	1800.00	2240.00
X2	2240.00	2850.00
Y1	2850.00	3550.00
Y2	3550.00	4500.00
Z1	4500.00	5600.00
Z2	5600.00	7150.00
11	7150.00	9000.00
12	9000.00	11250.00

chanhvinh.com

Color Bin Select (X_7)

Individual reel will contain parts from one half bin only.

X_7	
0	Full Distribution
Z	A and B only
Y	B and C only
W	C and D only
V	D and E only
U	E and F only
T	F and G only
S	G and H only
Q	A, B, and C only
P	B, C, and D only
N	C, D, and E only
M	D, E, and F only
L	E, F, and G only
K	F, G, and H, only
1	A, B, C, and D only
2	E, F, G, and H only
3	B, C, D, and E only
4	C, D, E, and F only
5	A, B, C, D, and E only
6	B, C, D, E, and F only

Color Bin Limits

Blue	Min. (nm)	Max. (nm)
A	460.0	465.0
B	465.0	470.0
C	470.0	475.0
D	475.0	480.0

Green	Min. (nm)	Max. (nm)
A	515.0	520.0
B	520.0	525.0
C	525.0	530.0
D	530.0	535.0

Emerald Green	Min. (nm)	Max. (nm)
A	552.5	555.5
B	555.5	558.5
C	558.5	561.5
D	561.5	564.5

Yellow Green	Min. (nm)	Max. (nm)
A	564.5	567.5
B	567.5	570.5
C	570.5	573.5
D	573.5	576.5

Amber/Yellow	Min. (nm)	Max. (nm)
A	582.0	584.5
B	584.5	587.0
C	587.0	589.5
D	589.5	592.0
E	592.0	594.5
F	594.5	597.0

Orange	Min. (nm)	Max. (nm)
A	597.0	600.0
B	600.0	603.0
C	603.0	606.0
D	606.0	609.0
E	609.0	612.0

Red Orange	Min. (nm)	Max. (nm)
A	611.0	616.0
B	616.0	620.0

Red	Min. (nm)	Max. (nm)
Full Distribution		

NOTE: Tolerance of each bin limit = ±1 nm.

chanhvinh.com

Forward Voltage Bin Table

For HSMZ/V/U – A4xx-xxxxx only.

Bin	Min.	Max.
VA	1.9	2.2
VB	2.2	2.5
VC	2.5	2.8
VD	2.8	3.1
VE	3.1	3.4

Precautionary Notes

Handling Precautions

The encapsulation material of the LED is made of silicone for better product reliability. Compared to epoxy encapsulant that is hard and brittle, silicone is softer and flexible. Special handling precautions need to be observed during assembly of silicone encapsulated LED products. Failure to comply might lead to damage and premature failure of the LED. Refer to Application Note AN5288, *Silicone Encapsulation for LED: Advantages and Handling Precautions* for additional information.

- Do not poke sharp objects into the silicone encapsulant. Sharp objects, such as tweezers or syringes, might apply excessive force or even pierce through the silicone and induce failures to the LED die or wire bond.
- Do not touch the silicone encapsulant. Uncontrolled force acting on the silicone encapsulant might result in excessive stress on the wire bond. Hold the LED only by the body.
- Do not stack assembled PCBs together. Use an appropriate rack to hold the PCBs.
- The surface of the silicone material attracts dust and dirt easier than epoxy due to its surface tackiness. To remove foreign particles on the surface of silicone, use a cotton bud with isopropyl alcohol (IPA). During cleaning, rub the surface gently without putting much pressure on the silicone. Ultrasonic cleaning is not recommended.
- For automated pick and place, Broadcom has tested the following nozzle size to work well with this LED. However, due to the possibility of variations in other parameters, such as pick and place machine maker/ model and other settings of the machine, verify that the nozzle selected will not cause damage to the LED.

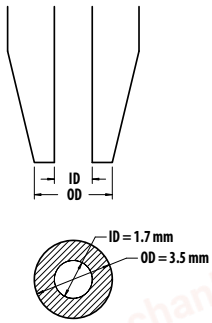

Handling of Moisture-Sensitive Devices

This product has a Moisture Sensitive Level 2arating per JEDEC J-STD-020. Refer to Application Note AN5305, *Handling of Moisture Sensitive Surface Mount Devices*, for additional details and a review of proper handling procedures.

- **Before use:**
  - An unopened moisture barrier bag (MBB) can be stored at < 40°C/90% RH for 12 months. If the actual shelf life has exceeded 12 months and the humidity indicator card (HIC) indicates that baking is not required, it is safe to reflow the LEDs per the original MSL rating.
  - Do not open the MBB d prior to assembly (IQC for example).
- **Control after opening the MBB:**
  - Read the HIC immediately upon opening the MBB.
  - Keep the LEDs at <30°C/60% RH at all times and all high temperature-related processes, including soldering, curing, or rework, must be completed within 672 hours.
- **Control for unfinished reel:**

  Store unused LEDs in a sealed MBB with desiccant or desiccator at <5% RH.
- **Control of assembled boards:**

  If the PCB soldered with the LEDs is to be subjected to other high-temperature processes, store the PCB in a sealed MBB with desiccant or desiccator at <5% RH to ensure that all LEDs have not exceeded their floor life of 672 hours.
- **Baking is required if the following conditions exist:**
  - The HIC indicator is not BROWN at 10% and is AZURE at 5%.
  - The LEDs are exposed to conditions of > 30°C/60% RH at any time.
  - The LED floor life exceeded 168 hours.

chanhvinh.com

The recommended baking condition is: 60°C ± 5ºC for 20 hours.

Baking should only be done once.

- **Storage:**

  The soldering terminals of these Broadcom LEDs are silver plated. If the LEDs are being exposed in an ambient environment for too long, the silver plating might be oxidized, thus affecting its solderability performance. As such, keep unused LEDs in a sealed MBB with desiccant or in desiccator at <5% RH.

Application Precautions

- The drive current of the LED must not exceed the maximum allowable limit across temperature as stated in the data sheet. Constant current driving is recommended to ensure consistent performance.
- LEDs exhibit slightly different characteristics at different drive currents, which might result in larger variation their performance (meaning intensity, wavelength, and forward voltage). Set the application current as close as possible to the test current to minimize these variations.
- The LED is not intended for reverse bias. Use other appropriate components for such purposes. When driving the LED in matrix form, ensure that the reverse bias voltage does not exceed the allowable limit of the LED.
- Do not use the LED in the vicinity of material with sulfur content, in environments of high gaseous sulfur compounds and corrosive elements. Examples of material that may contain sulfur are rubber gaskets, RTV (room temperature vulcanizing) silicone rubber, rubber gloves, and so on. Prolonged exposure to such environments may affect the optical characteristics and product life.
- Avoid rapid change in ambient temperatures, especially in high-humidity environments, because this will cause condensation on the LED.
- Although the LED is rated as IPx6 according toIEC60529: Degree of protection provided by enclosure, the test condition may not represent actual exposure during application. If the LED is intended to be used in outdoor or harsh environments, the LED must be protected against damages caused by rain water, dust, oil, corrosive gases, external mechanical stress, and so on.

Thermal Management

Optical, electrical and reliability characteristics of LED are affected by temperature. The junction temperature (T_J) of the LED must be kept below allowable limit at all times. T_J can be calculated as below:

$$T_J = T_A + R_{\theta J\text{-}A} \times I_F \times V_{Fmax}$$

where;

T_A = Ambient temperature (°C)

$R_{\theta J\text{-}A}$ = Thermal resistance from LED junction to ambient (°C/W)

I_F = Forward current (A)

V_{Fmax} = Maximum forward voltage (V)

The complication of using this formula lies in T_A and $R_{\theta J\text{-}A}$. Actual T_A is sometimes subjective and hard to determine. $R_{\theta J\text{-}A}$ varies from system to system depending on design and is usually not known.

Another way of calculating T_J is by using solder point temperature T_S as follows:

$$T_J = T_S + R_{\theta J\text{-}S} \times I_F \times V_{Fmax}$$

where;

T_S = LED solder point temperature as shown in the following figure (°C)

$R_{\theta J\text{-}S}$ = Thermal resistance from junction to solder point (°C/W)

Source 1

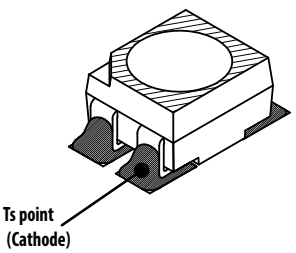

Source 2

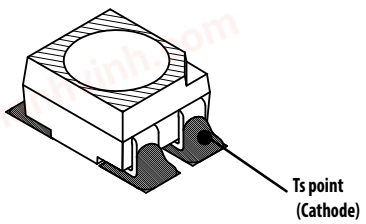

chanhvinh.com

T_S can be measured easily by mounting a thermocouple on the soldering joint as shown in the preceding figure, while $R_{\theta J-S}$ is provided in the data sheet. User is advised to verify the TS of the LED in the final product to ensure that the LEDs are operated within all maximum ratings stated in the data sheet.

Eye Safety Precautions

LEDs may pose optical hazards when in operation. Do not look directly at operating LEDs bercause it may be harmful to the eyes. For safety reasons, use appropriate shielding or personal protective equipment.

chanhvinh.com

Disclaimer

Broadcom's products and software are not specifically designed, manufactured, or authorized for sale as parts, components, or assemblies for the planning, construction, maintenance, or direct operation of a nuclear facility or for use in medical devices or applications. The customer is solely responsible, and waives all rights to make claims against Broadcom or its suppliers, for all loss, damage, expense, or liability in connection with such use.

Broadcom, the pulse logo, Connecting everything, Avago Technologies, Avago, and the A logo are among the trademarks of Broadcom and/or its affiliates in the United States, certain other countries, and/or the EU.

Copyright © 2013–2019 Broadcom. All Rights Reserved.

The term “Broadcom” refers to Broadcom Inc. and/or its subsidiaries. For more information, please visit www.broadcom.com.

Broadcom reserves the right to make changes without further notice to any products or data herein to improve reliability, function, or design. Information furnished by Broadcom is believed to be accurate and reliable. However, Broadcom does not assume any liability arising out of the application or use of this information, nor the application or use of any product or circuit described herein, neither does it convey any license under its patent rights nor the rights of others.

chanhvinh.com

BROADCOM®

Lead (Pb) Free
RoHS 6 fully
compliant