chanhvinh.com

BROADCOM®

Data Sheet

HSMx-C280

Miniature ChipLED



Description

The Broadcom® HSMx-C280 ChipLEDs are designed to 0402 (1.0 mm x 0.5 mm) industry-standard footprint. They are extremely small in size and the low 0.4-mm height makes them very suitable for application in small portable hand-held devices where real estate is a premium.

Four different colors are available: green, red, yellow, and amber. All parts are color and intensity binned except red color. They come in 8-mm paper tape on a 7 inch diameter reel with 4000 units per reel, which makes them compatible for automatic placement.

Device Selection Guide

AS AlInGaP

Part Number	Color	Package Description
HSMA-C280	Amber	Untinted, Diffused
HSMC-C280	Red	Untinted, Diffused
HSMG-C280	Green	Untinted, Diffused
HSMS-C280	HER	Untinted, Diffused
HSMY-C280	Yellow	Untinted, Diffused

Features

- Extremely small size (1.0 mm x 0.5 mm x 0.4 mm)
- 0402 industry-standard footprint
- Diffused optics
- Operating temperature range of –40°C to +85°C
- Compatible with IR soldering
- Available in four colors
- Available in 8-mm paper tape on 7 inch (178 mm) diameter reels
- Reel sealed in zip locked moisture barrier bags

Applications

- LCD backlighting
- Push-button backlighting
- Front-panel indicator
- Symbol backlighting
- Keypad backlighting

CAUTION! The HSMx-C280 LEDs are Class 1A ESD sensitive per JESD22-A114C.01 standard. Observe appropriate precautions during handling and processing. Refer to Application Note AN-1142 for additional details.

chanhvinh.com

Package Dimensions

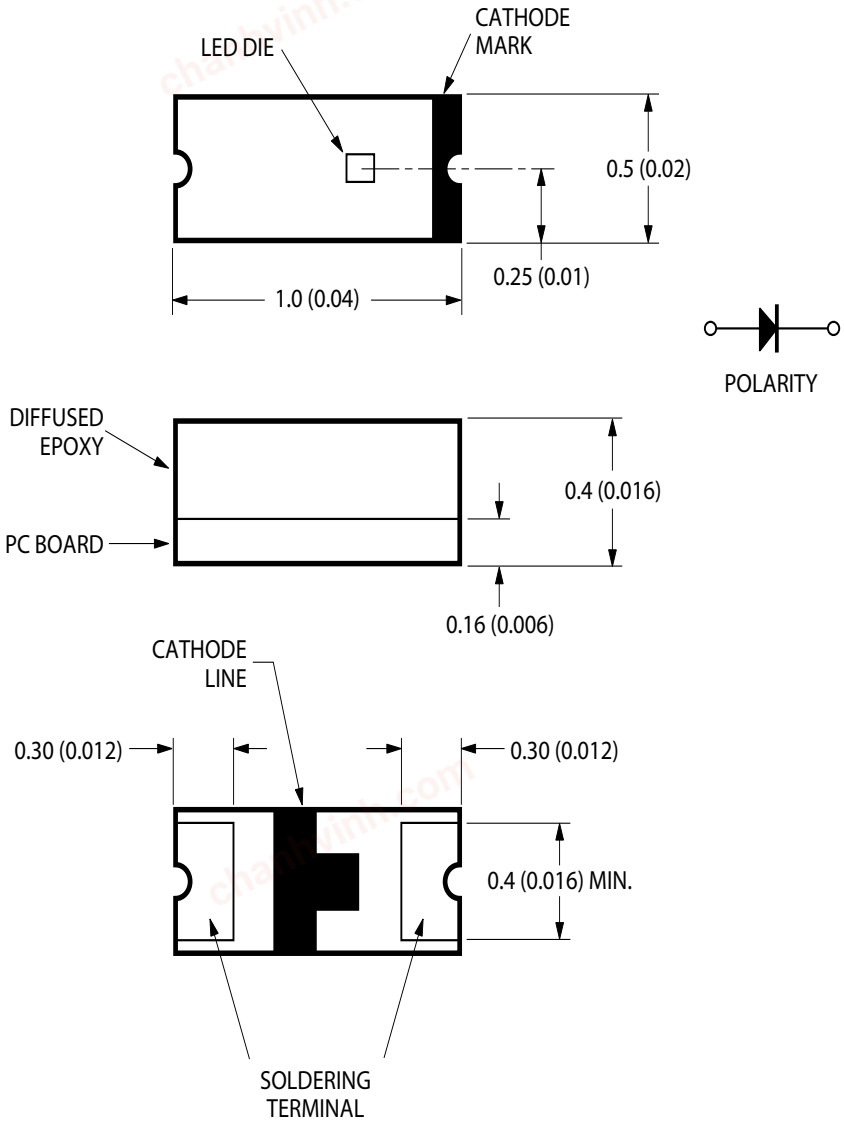

NOTE:

- All Dimensions are in millimeters (inches).
- Tolerance is ± 0.1 mm (± 0.004 in.) unless otherwise specified.

chanhvinh.com

Absolute Maximum Ratings at T_A = 25°C

Parameter	HSMA/C-C280	HSMG/S/Y-C280	Unit
DC Forward Current[a]	25	20	mA
Power Dissipation	60	52	mW
Reverse Voltage	5	5	V
LED Junction Temperature	95	95	°C
Operating and Storage Temperature Range	–40 to 85		°C
Soldering Temperature	See reflow soldering profile (Figure 6 and Figure 7)		

a. Derate linearly as shown in Figure 4.

Electrical Characteristics at T_A = 25°C

	Forward Voltage,[a] V_F (V)			Reverse Current,[b] I_R (µA) at V_R = 5V	Thermal Resistance,[c] $R\theta_{J-S}$ (°C/W)
Part Number	Minimum	Typical	Maximum	Maximum	Typical
HSMA-C280	1.60	1.90	2.40	10	300
HSMC-C280	1.60	1.90	2.40	10	300
HSMG-C280	1.60	2.20	2.60	10	250
HSMS-C280	1.60	2.10	2.60	10	250
HSMY-C280	1.60	2.10	2.60	10	250

a. Forward voltage tolerance is ±0.1V.

b. Indicates product final test condition. Long-term reverse bias is not recommended.

c. Thermal resistance from LED junction to solder point.

Optical Characteristics at T_A = 25°C

	Luminous Intensity, I_V [a] (mcd)		Dominant Wavelength, λ_d [b] (nm)	Peak Wavelength, λ_p (nm)	Viewing Angle $2\theta_{1/2}$ [c](Degrees)
Part Number	Minimum	Typical	Typical	Typical	Typical
HSMA-C280	28.5	90.0	592	595	130
HSMC-C280	28.5	90.0	626	637	130
HSMG-C280	4.50	15.0	572	570	130
HSMS-C280	2.80	10.0	626	630	130
HSMY-C280	2.80	8.0	586	589	130

a. The luminous intensity, I_V, is measured at the mechanical axis of the package, and it is tested with a single current pulse condition. The actual peak of the spatial radiation pattern may not be aligned with the axis.

b. The dominant wavelength, λ_d, is derived from the CIE Chromaticity Diagram and represents the perceived color of the device.

c. $\theta_{1/2}$ is the off-axis angle where the luminous intensity is one half the peak intensity.

chanhvinh.com

Color Bin Limits[1]

Green Color Bins

Bin ID	Dominant Wavelength (nm)	
	Minimum	Maximum
A	561.5	564.5
B	564.5	567.5
C	567.5	570.5
D	570.5	573.5
E	573.5	576.5

Tolerance: ±1 nm.

Yellow/Amber Color Bins

Bin ID	Dominant Wavelength (nm)	
	Minimum	Maximum
A	582.0	584.5
B	584.5	587.0
C	587.0	589.5
D	589.5	592.0
E	592.0	594.5
F	594.5	597.0

Tolerance: ±1 nm.

Red Color Bins

Bin ID	Dominant Wavelength (nm)	
	Minimum	Maximum
—	620.0	635.0

Tolerance: ±1 nm.

Light Intensity (I_V) Bin Limits

Bin ID	Intensity (mcd)	
	Minimum	Maximum
A	0.11	0.18
B	0.18	0.29
C	0.29	0.45
D	0.45	0.72
E	0.72	1.10
F	1.10	1.80
G	1.80	2.80
H	2.80	4.50
J	4.50	7.20
K	7.20	11.20
L	11.20	18.00
M	18.00	28.50
N	28.50	45.00
P	45.00	71.50
Q	71.50	112.50
R	112.50	180.00
S	180.00	285.00
T	285.00	450.00
U	450.00	715.00
V	715.00	1125.00
W	1125.00	1800.00
X	1800.00	2850.00
Y	2850.00	4500.00

Tolerance: ±15%.

1. Bin categories are established for classification of products. Products may not be available in all categories. Contact your Broadcom representative for information on current available bins.

chanhvinh.com

Figure 1: Relative Intensity versus Wavelength

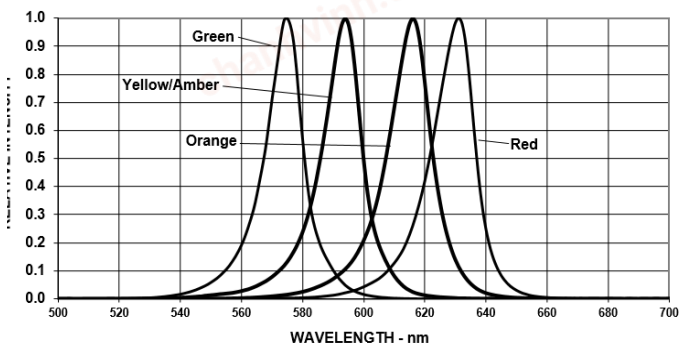

Figure 2: Forward Current versus Forward Voltage

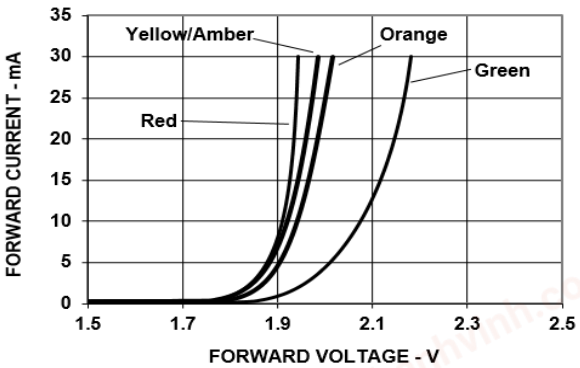

Figure 3: Luminous Intensity versus Forward Current

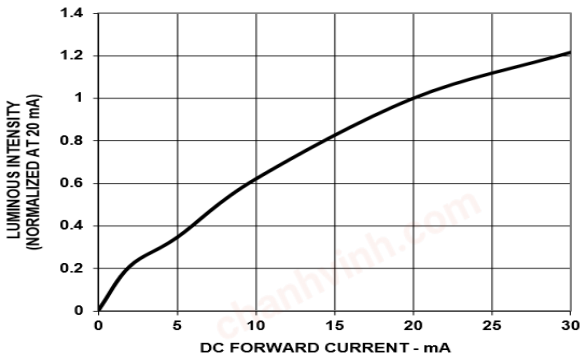

Figure 4: Maximum Forward Current versus Ambient Temperature

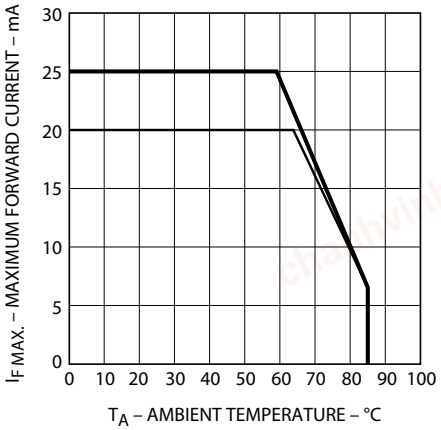

Figure 5: Relative Intensity versus Angle



Figure 6: Recommended Reflow Soldering Profile

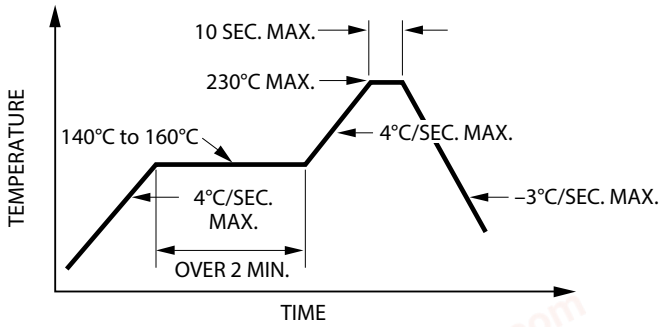

chanhvinh.com

Figure 7: Recommended Pb-free Reflow Soldering Profile

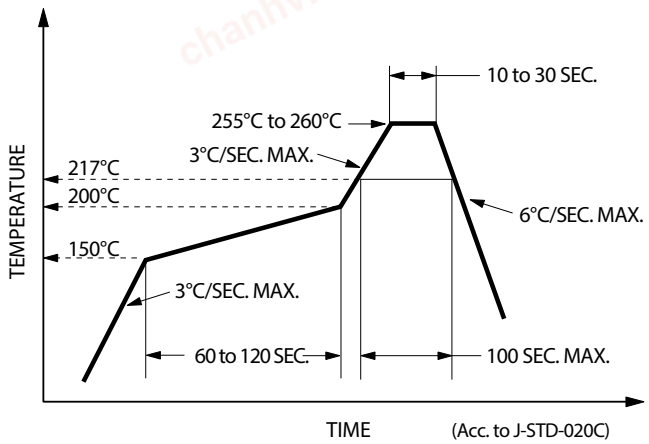

Figure 8: Recommended Soldering Pattern

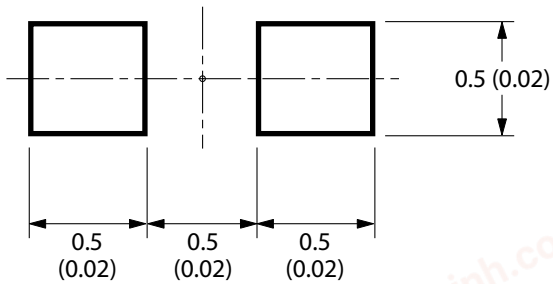

Figure 9: Reeling Orientation

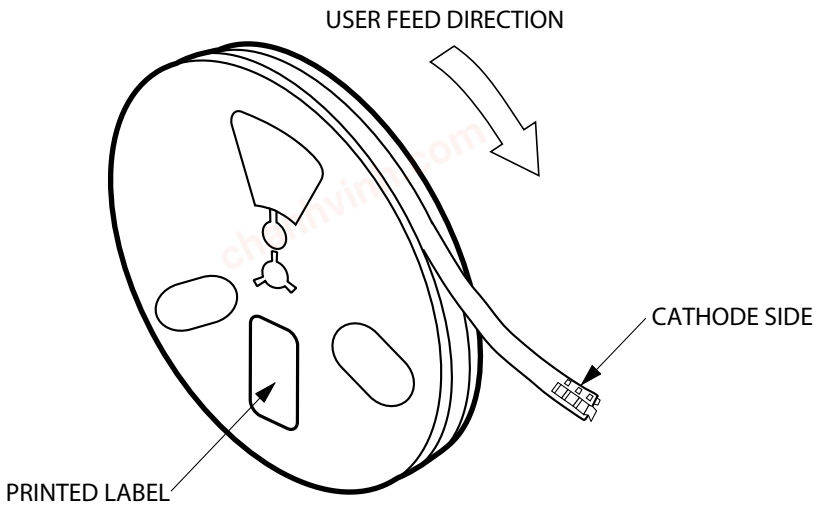

chanhvinh.com

Figure 10: Reel Dimensions

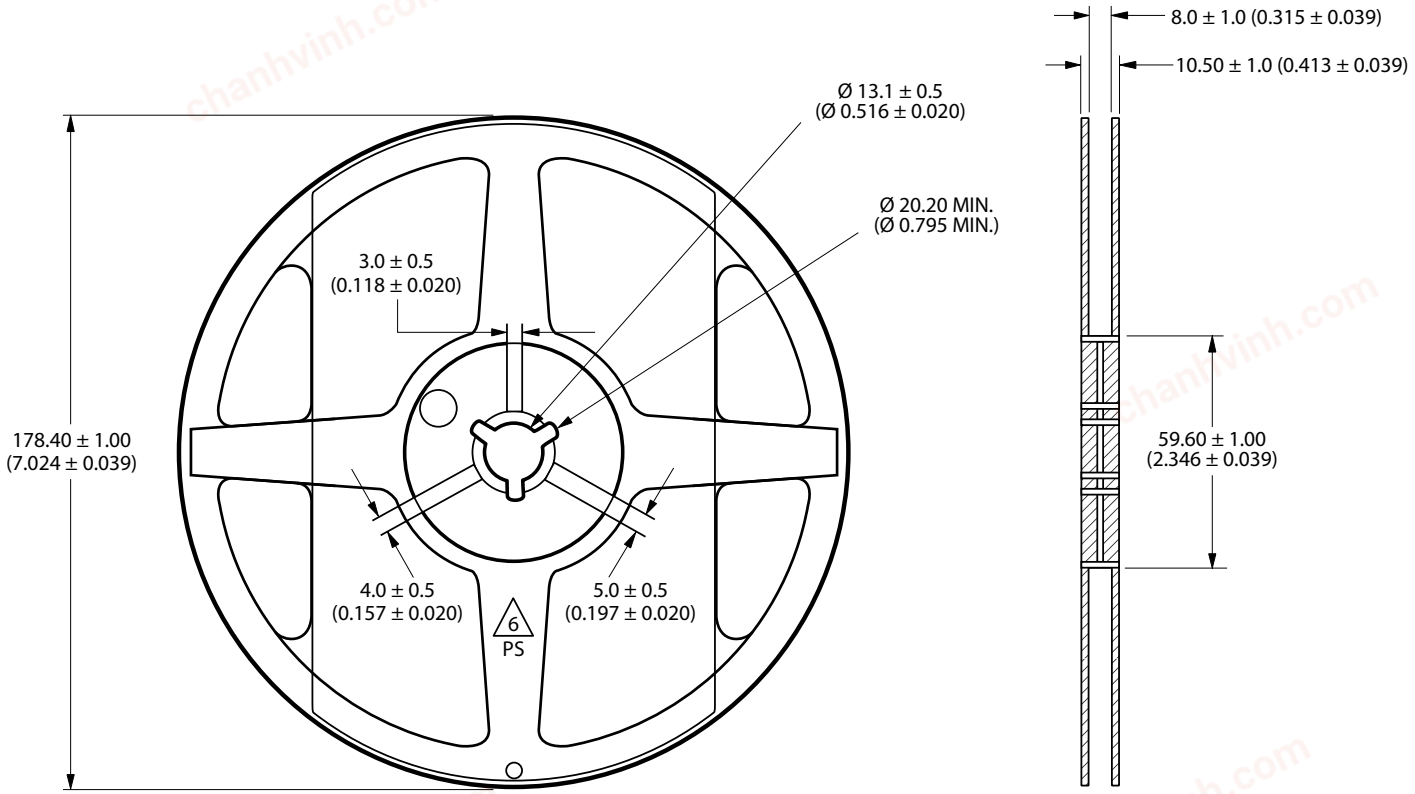

NOTE: All dimensions are in millimeters (inches).

Figure 11: Tape Dimensions

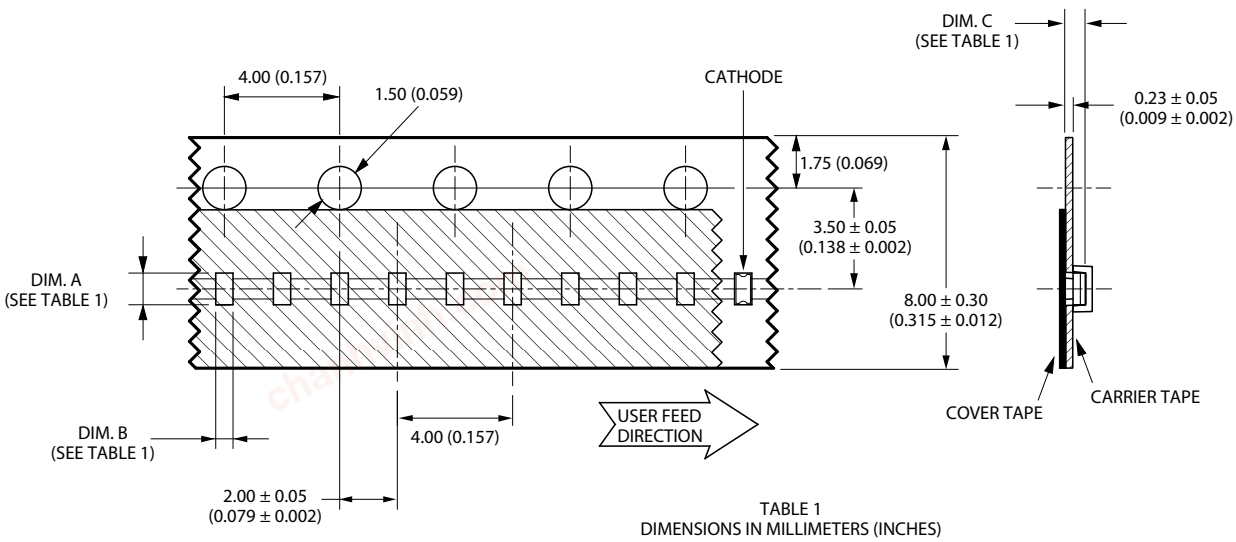

TABLE 1
DIMENSIONS IN MILLIMETERS (INCHES)

PART NUMBER	DIM. A ± 0.10 (± 0.004)	DIM. B ± 0.10 (± 0.004)	DIM. C ± 0.10 (± 0.004)
HSMx-C280 SERIES	1.10 (0.043)	0.60 (0.024)	0.66 (0.026)

chanhvinh.com

Figure 12: Tape Leader and Trailer Dimensions

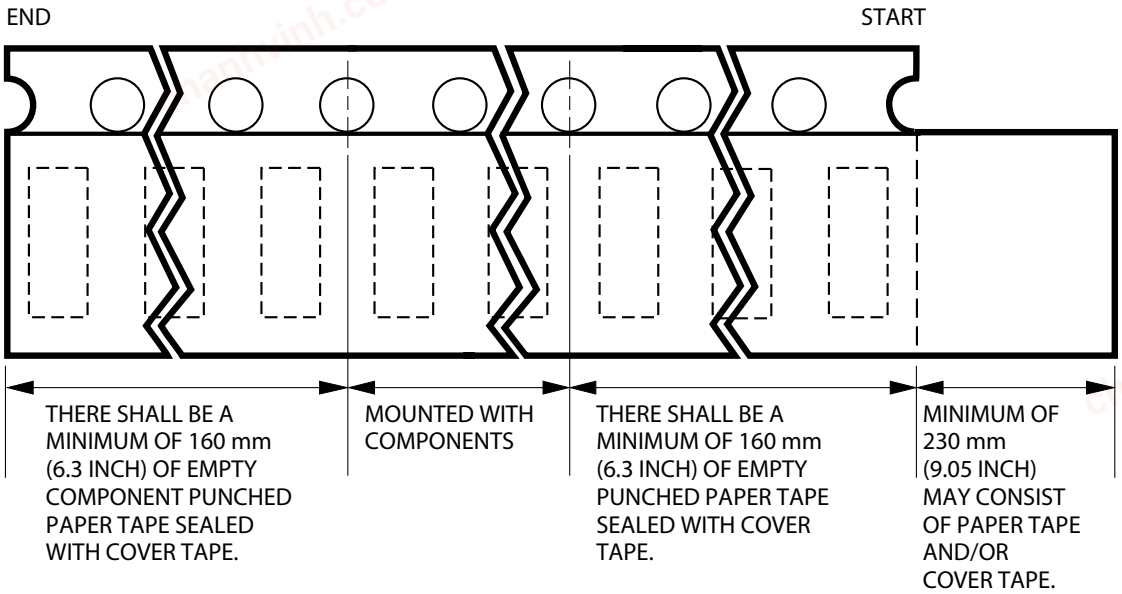

NOTE: All dimensions are in millimeters (inches).
Tolerance is ±0.1 mm (±0.004 in.) unless otherwise specified.

chanhvinh.com

Precautionary Notes

Soldering

- Do not perform reflow soldering more than twice. Observe necessary precautions of handling moisture-sensitive devices as stated in the following section.
- Do not apply any pressure or force on the LED during reflow and after reflow when the LED is still hot.
- Use reflow soldering to solder the LED. Use hand soldering only for rework if unavoidable, but it must be strictly controlled to following conditions:
  - Soldering iron tip temperature = 310°C maximum.
  - Soldering duration = 2 seconds maximum.
  - Number of cycles = 1 only.
  - Power of soldering iron = 50W maximum.
- Do not touch the LED package body with the soldering iron, except for the soldering terminals, because it may cause damage to the LED.
- Confirm beforehand whether the functionality and performance of the LED is affected by soldering with hand soldering.

Figure 13: Recommended Lead-Free Reflow Soldering Profile

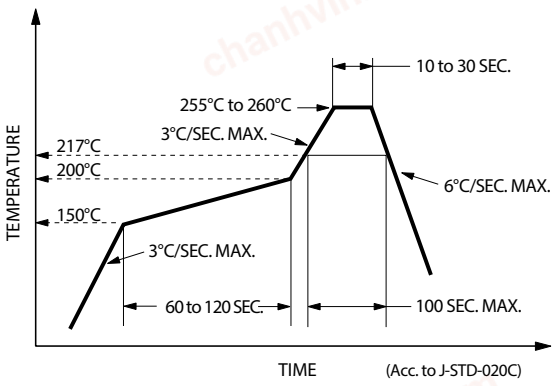

Handling Precautions

This product has a Moisture Sensitive Level 2a rating per JEDEC J-STD-020. Refer to Broadcom Application Note AN5305, *Handling of Moisture Sensitive Surface Mount Devices*, for additional details and a review of proper handling procedures.

Before use:

- An unopened moisture barrier bag (MBB) can be stored at <40°C/90% RH for 12 months. If the actual shelf life has exceeded 12 months and the humidity indicator card (HIC) indicates that baking is not required, it is safe to reflow the LEDs per the original MSL rating.
- Do not open the MBB prior to assembly (for example, for IQC). If unavoidable, the MBB must be properly resealed with fresh desiccant and HIC. The exposed duration must be taken in as floor life.

Control after opening the MBB:

- Read the HIC immediately upon opening the MBB.
- Keep the LEDs at <30°/60% RH at all times, and complete all high temperature-related processes, including soldering, curing, or rework, within 672 hours.

Control for unfinished reel:

Store unused LEDs in a sealed MBB with desiccant or a desiccator at <5% RH.

Control of assembled boards:

If the PCB soldered with the LEDs is to be subjected to other high-temperature processes, store the PCB in a sealed MBB with desiccant or desiccator at <5% RH to ensure that all LEDs have not exceeded their floor life of 672 hours.

Baking is required if the following conditions exist:

- The HIC indicator indicates a change in color for 10% and 5%, as stated on the HIC.
- The LEDs are exposed to conditions of >30°C/60% RH at any time.
- The LEDs' floor life exceeded 672 hours.

The recommended baking condition is 60°C ± 5°C for 20 hours.

Baking can only be done once.

chanhvinh.com

Application Precautions

- The drive current of the LED must not exceed the maximum allowable limit across temperature as stated in the data sheet. Constant current driving is recommended to ensure consistent performance.
- Circuit design must cater to the entire range of forward voltage (V_F) of the LEDs to ensure the intended drive current can always be achieved.
- The LED exhibits slightly different characteristics at different drive currents, which can result in a larger variation of performance (such as intensity, wavelength, and forward voltage). Set the application current as close as possible to the test current to minimize these variations.
- If the LED is intended to be used along with LEDs of other colors to achieve color mixing, Broadcom does not guarantee the consistency of the resultant color. Contact your Broadcom sales representative for these applications.
- The LED is not intended for reverse bias. Use other appropriate components for such purposes. When driving the LED in matrix form, ensure that the reverse bias voltage does not exceed the allowable limit of the LED.
- Avoid rapid changes in ambient temperatures, especially in high-humidity environments, because they cause condensation on the LED.
- If the LED is intended to be used in a harsh or an outdoor environment, protect the LED against damages caused by rain water, water, dust, oil, corrosive gases, external mechanical stresses, and so on.

Eye Safety Precautions

LEDs may pose optical hazards when in operation. Do not look directly at operating LEDs because it might be harmful to the eyes. For safety reasons, use appropriate shielding or personal protective equipment.

chanhvinh.com

Copyright © 2005–2022 Broadcom. All Rights Reserved. The term “Broadcom” refers to Broadcom Inc. and/or its subsidiaries. For more information, go to www.broadcom.com. All trademarks, trade names, service marks, and logos referenced herein belong to their respective companies.

Broadcom reserves the right to make changes without further notice to any products or data herein to improve reliability, function, or design. Information furnished by Broadcom is believed to be accurate and reliable. However, Broadcom does not assume any liability arising out of the application or use of this information, nor the application or use of any product or circuit described herein, neither does it convey any license under its patent rights nor the rights of others.

BROADCOM®