chanhvinh.com

HSMF-C118
TriColor ChipLED

Data Sheet



Description

The HSMF-C118 tricolor chip-type LED is designed in an ultra small package for miniaturization. It is the first of its kind to achieve such small packaging for 3 dies. With the freedom to have any combination of colors from mixing of the 3 primary colors, this will yield a wide variety of colors to suit every application and product theme.

The small size, narrow footprint, and low profile make this LED excellent for back-lighting, status indication, and front panel illumination applications.

In order to facilitate pick and place operation, this ChipLED is shipped in tape and reel, with 3000 units per reel. The package is compatible with IR soldering and binned by both color and intensity.

Features

- Common anode
- Small 3.2 x 2.7 x 1.1 mm package
- Diffused optics
- Red/Green/Blue color combination
- Available in 8 mm tape on 7 inch (178 mm) diameter reels
- High brightness using AlInGaP and InGaN die technology
- Compatible with reflow soldering

Applications

- Backlighting
- Status indicator
- Front panel indicator
- Office automation, home appliances, industrial equipment

CAUTION: HSMF-C118 is Class 1A ESD sensitive per JESD22-A114C.01. Please observe appropriate precautions during handling and processing. Refer to Application Note AN-1142 for additional details.

chanhvinh.com

Package Dimensions

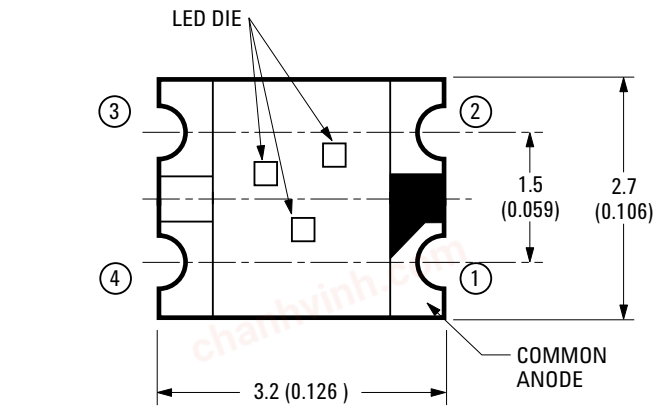

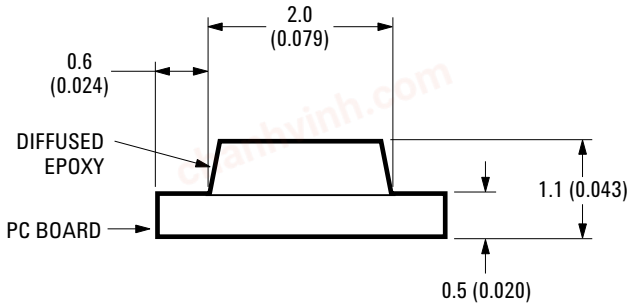

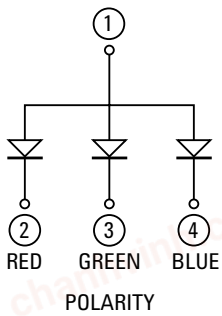

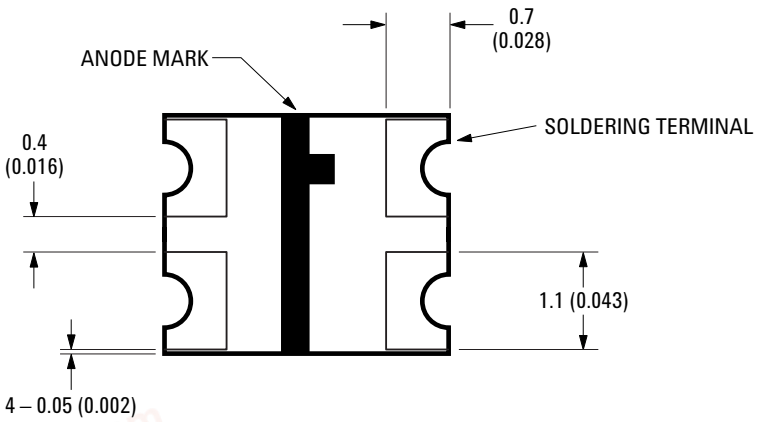

NOTES:
1. DIMENSIONS IN MILLIMETERS (INCHES).
2. TOLERANCE ± 0.1 mm UNLESS OTHERWISE NOTED.

chanhvinh.com

Absolute Maximum Ratings at $T_A = 25°C$

Parameter	AlInGaP Red	InGaN Green	InGaN Blue	Units
DC Forward Current[1, 3, 4]	20	20	20	mA
Power Dissipation[1]	48	78	78	mW
DC Forward Current[2]	15	15	15	mA
Power Dissipation[2]	36	59	59	mW
Reverse Voltage (I_R = 100 µA)	5	5	5	V
LED Junction Temperature	95	95	95	°C
Operating Temperature Range		–30 to +85		°C
Storage Temperature Range		–40 to +85		°C
Soldering Temperature		See reflow soldering profile (Figures 6 & 7)		

Notes:
1. Applies when single LED is lit up.
2. Applies when all 3 LEDs are lit up simultaneously.
3. Derate linearly as shown in Figure 4.
4. Drive currents above 5 mA are recommended for best long term performance.

Electrical Characteristics at $T_A = 25°C$

	Forward Voltage V_F (Volts) @ I_F = 20 mA		Reverse Breakdown V_R (Volts) @ I_R = 100 µA	Capacitance C (pF), @ V_F = 0, f = 1 MHz	Thermal Resistance $R\theta_{J\text{-}PIN}$ (°C/W)
Color	Typ.	Max.	Min.	Typ.	Typ.
AlInGaP Red	1.9	2.4	5	17	400
InGaN Green	3.5	3.9	5	110	450
InGaN Blue	3.5	3.9	5	110	450

Optical Characteristics at $T_A = 25°C$

	Luminous Intensity I_v (mcd) @ I_F = 20 mA[1]		Peak Wavelength λ_{peak} (nm)	Color, Dominant Wavelength λ_d[2] (nm)	Viewing Angle 2 $\theta_{1/2}$ Degrees[3]	Luminous Efficacy η_v (lm/W)
Color	Min.	Typ.	Typ.	Typ.	Typ.	Typ.
AlInGaP Red	28.5	90	637	626	135	155
InGaN Green	45.0	120	523	525	130	490
InGaN Blue	11.2	40	468	470	125	80

Notes:
1. The luminous intensity, I_v, is measured at the peak of the spatial radiation pattern which may not be aligned with the mechanical axis of the lamp package.
2. The dominant wavelength, λ_d, is derived from the CIE Chromatically Diagram and represents the perceived color of the device.
3. $\theta_{1/2}$ is the off-axis angle where the luminous intensity is 1/2 the peak intensity.

chanhvinh.com

Intensity (I_V) Bin Limits[1]

	Intensity (mcd)	
Bin ID	Min.	Max.
L	11.20	18.00
M	18.00	28.50
N	28.50	45.00
P	45.00	71.50
Q	71.50	112.50
R	112.50	180.00
S	180.00	285.00

Tolerance: ± 15%.

Color Bin Limits [1]

Blue Color Bins

	Dom. Wavelength (nm)	
Bin ID	Min.	Max.
A	460.0	465.0
B	465.0	470.0
C	470.0	475.0
D	475.0	480.0

Tolerance: ± 1 nm

Red Color Bins

	Dom. Wavelength (nm)	
Bin ID	Min.	Max.
–	620.0	635.0

Tolerance: ± 1 nm

Green Color Bins

	Dom. Wavelength (nm)	
Bin ID	Min.	Max.
A	515.0	520.0
B	520.0	525.0
C	525.0	530.0
D	530.0	535.0

Tolerance: ± 1 nm

Note:

1. Bin categories are established for classification of products. Products may not be available in all categories. Please contact your Avago Technologies representative for information on currently available bins.

CAUTION:

1. The above optical performance specifications are valid in the case when single LED is lit up.
2. The above product specifications DO NOT provide any guarantee on color mixing, color consis-tency over time, or uniformity in luminous intensity when more than 1 LED is lit.
3. Please refer to *Application Brief AB D-007* for additional details/explanation on driving the part in parallel circuit.

chanhvinh.com

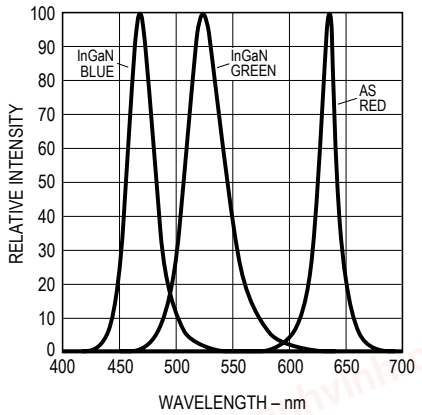

Figure 1. Relative intensity vs. wavelength.

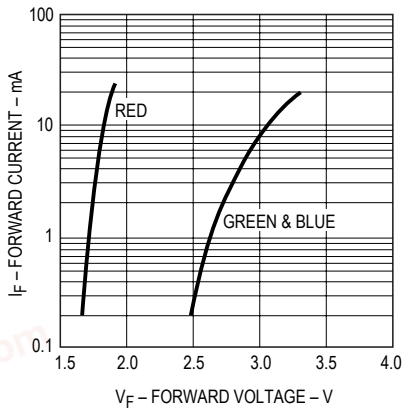

Figure 2. Forward current vs. forward voltage.

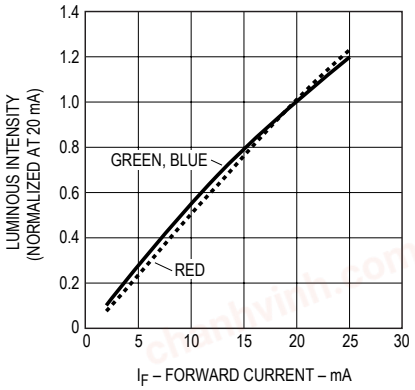

Figure 3. Luminous intensity vs. forward current.

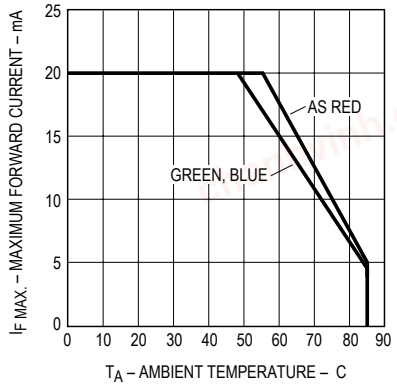

Figure 4. Maximum forward current vs. ambient temperature (1 chip lit up).

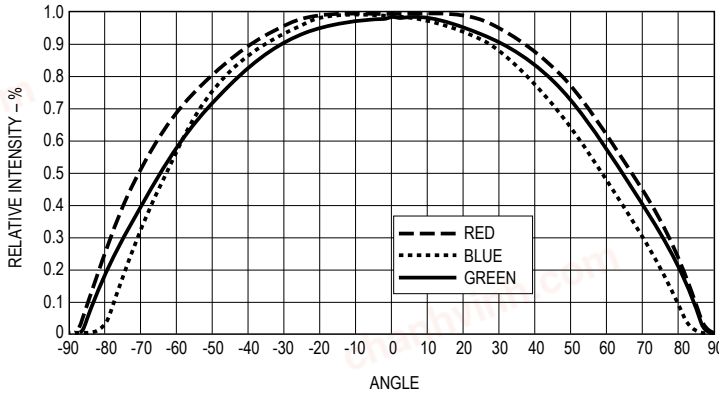

Figure 5. Relative intensity vs. angle.

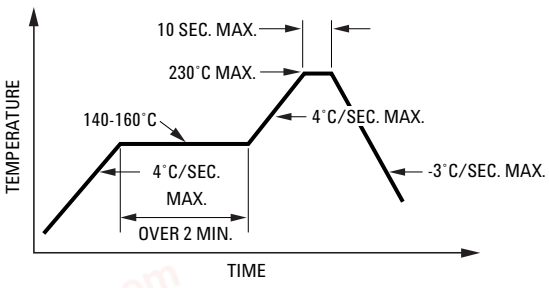

Figure 6. Recommended Pb-Free reflow soldering profile.

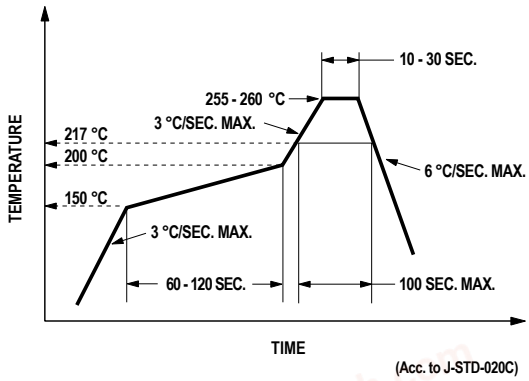

Figure 7. Recommended Pb-Free reflow soldering profile.

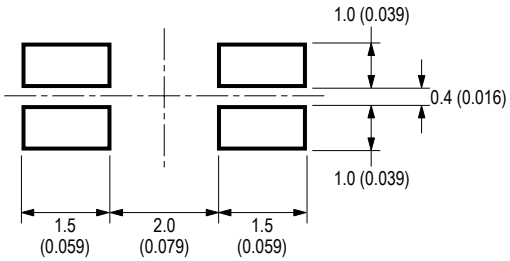

Figure 8. Recommended soldering pattern.

chanhvinh.com

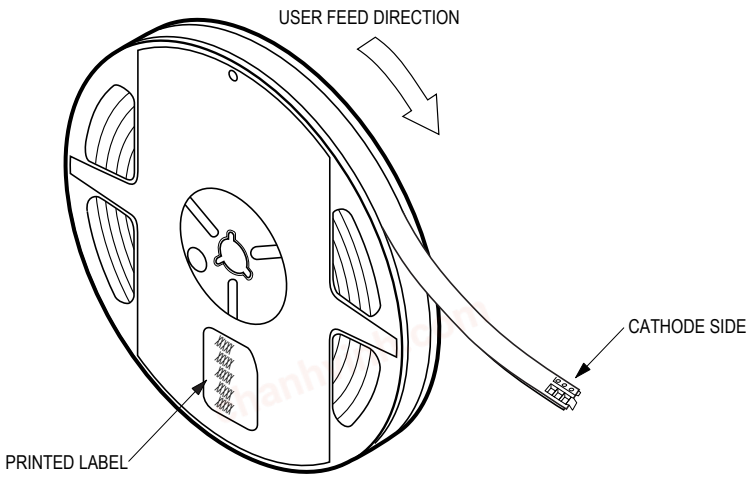

Figure 9. Reeling orientation.

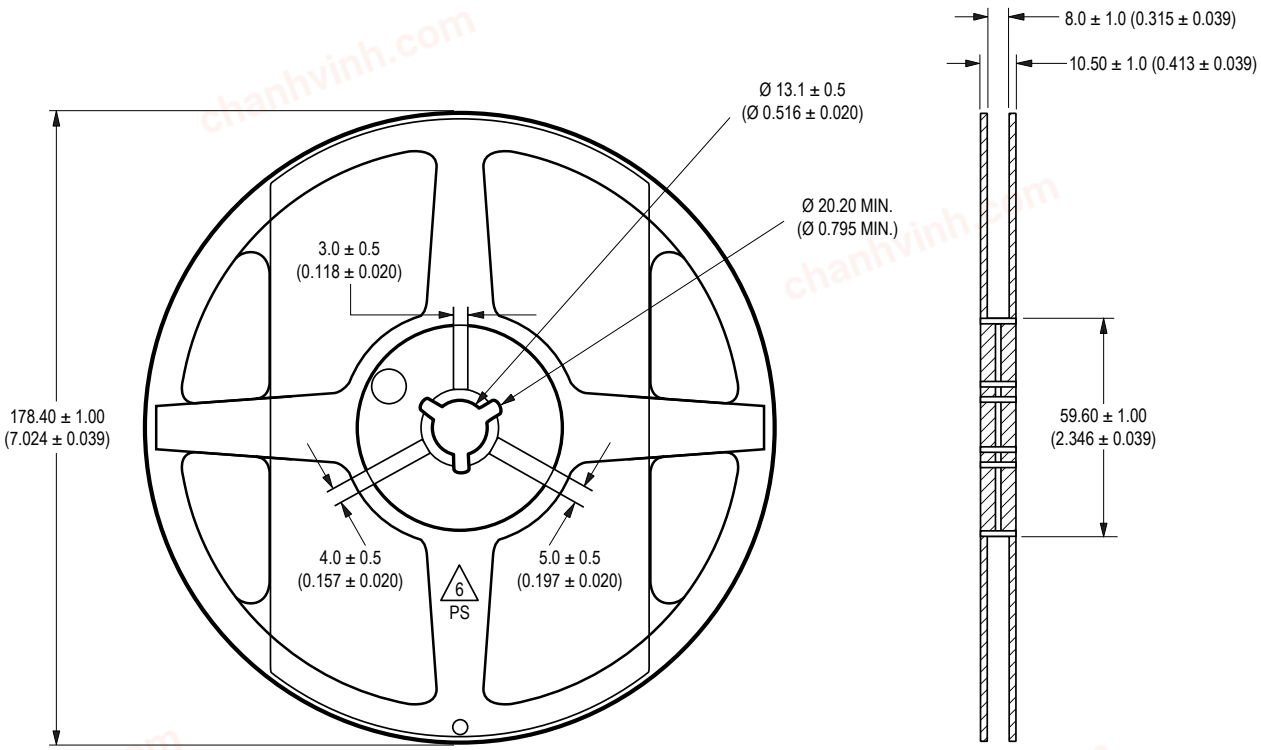

Figure 10. Reel dimensions.

chanhvinh.com

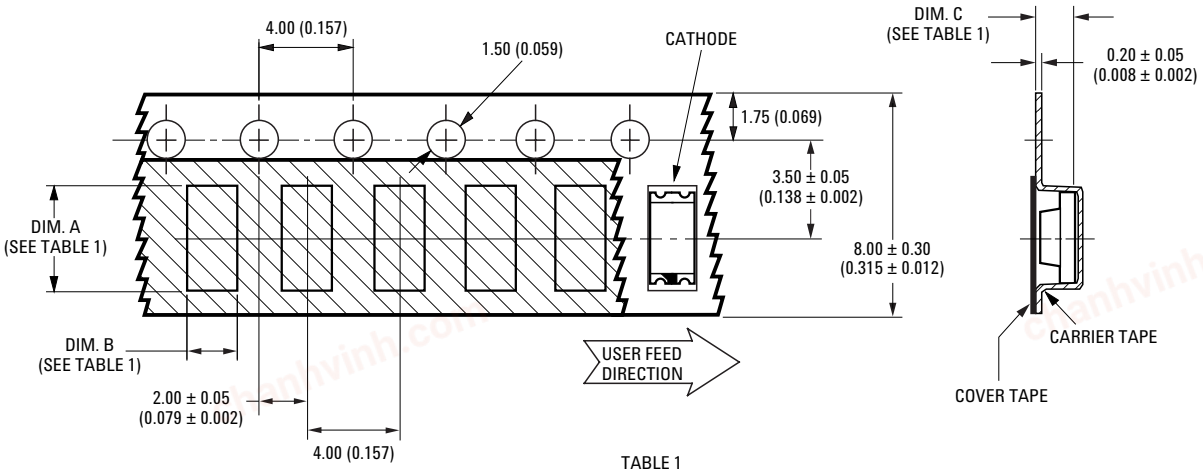

TABLE 1
DIMENSIONS IN MILLIMETERS (INCHES)

PART NUMBER	DIM. A ± 0.10 (± 0.004)	DIM. B ± 0.10 (± 0.004)	DIM. C ± 0.10 (± 0.004)
HSMF-C118	3.52 (0.139)	3.02 (0.119)	1.40 (0.055)

Figure 11. Tape dimensions.

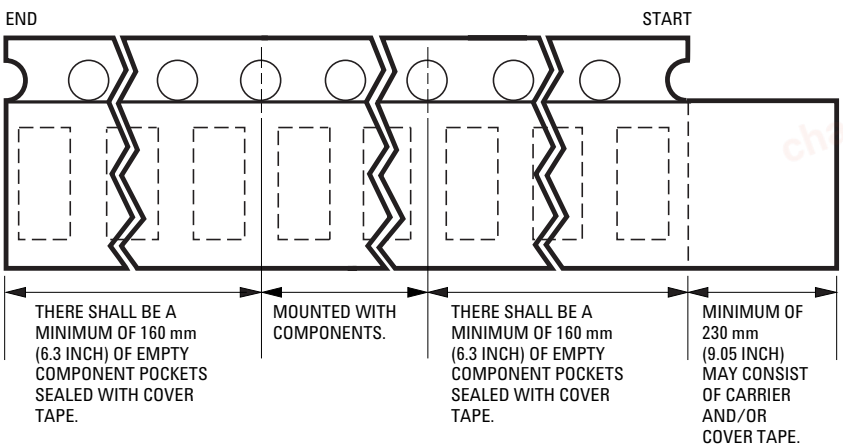

Figure 12. Tape leader and trailer dimensions.

chanhvinh.com

Reflow Soldering:

For more information on reflow soldering, refer to Application Note AN-1060, Surface Mounting SMT LED Indicator Components.

Storage Condition: 5 to 30°C @ 60%RH max.

Baking is required before mounting, if:

1. Humidity Indicator Card is > 10% when read at 23 ± 5°C.
2. Device expose to factory conditions <30°C/60%RH more than 672 hours.

Recommended baking condition: 60±5°C for 20 hours.

chanhvinh.com

For product information and a complete list of distributors, please go to our web site: **www.avagotech.com**

Avago, Avago Technologies, and the A logo are trademarks of Avago Technologies, Pte. in the United States and other countries.
Data subject to change. Copyright © 2006 Avago Technologies Pte. All rights reserved. Obsoletes 5989-4811EN
AV02-0610EN - July 25, 2006