chanhvinh.com

HSMx-A2-xx-xxxxx Bi-Color
HSMx-A3xx-xxxxx Tri-Color

Surface Mount LED Indicators,
PLCC-4 SMT LEDs

Data Sheet

Lead (Pb) Free
RoHS 6 fully
compliant



Description

This family of SMT LEDs is packaged in the industry standard PLCC-4 package. These SMT LEDs have high reliability performance and are designed to work under a wide range of environmental conditions. This high reliability feature makes them ideally suited to be used under harsh interior automotive as well as interior signs application conditions.

To facilitate easy pick and place assembly, the LEDs are packed in EIA-compliant tape and reel. Every reel will be shipped in single intensity and color bin, except red color to provide close uniformity.

These LEDs are compatible with IR and TTW solder reflow process.

This super wide viewing angle at 120° together with the built in reflector pushing up the intensity of the light output makes these LED suitable to be used in the interior electronics signs. The flat top emitting surface makes it easy for these LEDs to mate with light pipes. This is suitable for general backlighting in automotive interior, office equipment, industrial equipment, and home appliances.

Features

- Industry Standard PLCC-4 package (Plastic Leaded Chip Carrier)
- High reliability LED package due to enhanced silicone resin material
- High brightness using AlInGaP and InGaN dice technologies
- Available in full selection of colors
- Super wide viewing angle at 120°
- Available in 8 mm carrier tape on 7-inch reel
- Compatible with IR soldering process

Applications

- Electronic signs and signals
  - Interior full color sign
  - Variable message sign
- Interior automotive
  - Instrument cluster backlighting
  - Central console backlighting
  - Cabin backlighting
- Office automation, home appliances, industrial equipment
  - Front panel backlighting
  - Display backlighting

CAUTION: HSMF-Axxx-xxxxx LEDs are Class 2 ESD sensitive. Please observe appropriate precautions during handling and processing. Refer to Avago Application Note AN-1142 for additional details.

chanhvinh.com

Package Dimensions

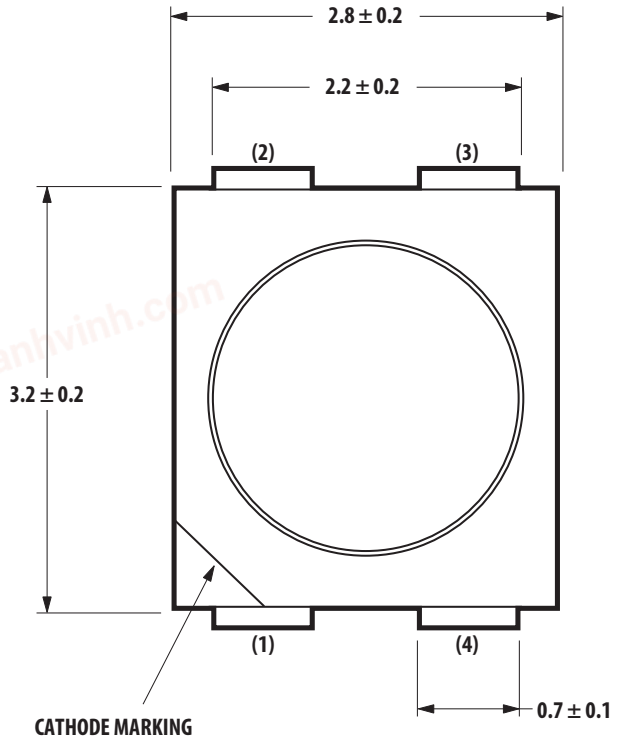

NOTE:
1. ALL DIMENSIONS IN mm.

Tri Color	
1	Cathode (Color 1)
2	Common Anode
3	Cathode (Color 3)
4	Cathode (Color 2)

Bi Color	
1	Cathode (Color 1)
2	Anode (Color 1)
3	Cathode (Color 2)
4	Anode (Color 2)

Device Selection Guide

Bi Color

Part Number	Color 1	Color 2
HSMF-A201- xxxxx	GaP Red	GaP Yellow Green
HSMF-A202- xxxxx	GaP Red	GaP Yellow
HSMF-A203- xxxxx	GaP Red	GaP Emerald Green
HSMF-A204- xxxxx	GaP Orange	GaP Yellow Green
HSMF-A205- xxxxx	GaP Orange	GaP Emerald Green
HSMF-A206- xxxxx	GaP Yellow	GaP Yellow Green
HSMF-A211- xxxxx	AlGaAs Red	GaP Yellow Green
HSMF-A212- xxxxx	AlGaAs Red	GaP Yellow
HSMF-A222- xxxxx	AlInGaPRed	AlInGaP Amber
HSMF-A226- xxxxx	AlInGaP Amber	AlInGaP Yellow Green

chanhvinh.com

Part Number	Color 1 Min. Iv @ 20 mA Bin ID	(mcd)	Typical Iv @ 20 mA (mcd)	Color 2 Min. Iv @ 20 mA Bin ID	(mcd)	Typical Iv @ 20 mA (mcd)
HSMF-A201-A00J1	K2	9.0	16.0	L1	11.2	20.0
HSMF-A202-A00J1	K2	9.0	16.0	K1	7.2	12.0
HSMF-A203-A00J1	K2	9.0	16.0	J1	4.5	8.0
HSMF-A204-A00J1	K2	9.0	16.0	L1	11.2	20.0
HSMF-A205-A00J1	K2	9.0	16.0	J1	4.5	8.0
HSMF-A206-A00J1	K2	9.0	16.0	L1	11.2	20.0
HSMF-A211-A00J1	L2	14.0	25.0	L1	11.2	20.0
HSMF-A212-A00J1	L2	14.0	25.0	K1	7.2	12.0
HSMF-A222-A00J1	P1	45.0	80.0	P1	45.0	80.0
HSMF-A226-A00J1	P2	56.0	100.0	M2	22.4	60.0

Note:
1. The luminous intensity Iv, is measured at the mechanical axis of the lamp package. The actual peak of the spatial radiation pattern may not be aligned with this axis.
2. I_V tolerance = ±10 %.

Tri Color

Part Number	Color 1	Color 2	Color 3
HSMF-A341-xxxxx	AlInGaP Red	InGaN Green	InGaN Blue

Part Number	Color 1 Min. Iv @ 20 mA Bin ID	(mcd)	Typical Iv @ 20 mA (mcd)	Color 2 Min. Iv @ 20 mA Bin ID	(mcd)	Typical Iv @ 20 mA (mcd)	Color 3 Min. Iv @ 20 mA Bin ID	(mcd)	Typical Iv @ 20 mA (mcd)
	K2	9.0	13.0	L2	14.0	20.0	K2	9.2	10.0
	P1	45.0	80.0	R1	112.5	160.0	K2	9.2	10.0
	P1	45.0	80.0	R1	112.5	160.0	K2	9.2	10.0
HSMF-A341-A00J1	P1	45.0	80.0	R1	112.5	160.0	N1	28.5	40.0
	P1	45.0	80.0	R1	112.5	160.0	N1	28.5	40.0

Note:
1. The luminous intensity Iv, is measured at the mechanical axis of the lamp package. The actual peak of the spatial radiation pattern may not be aligned with this axis.
2. I_V tolerance = ±10 %.

chanhvinh.com

Part Numbering System

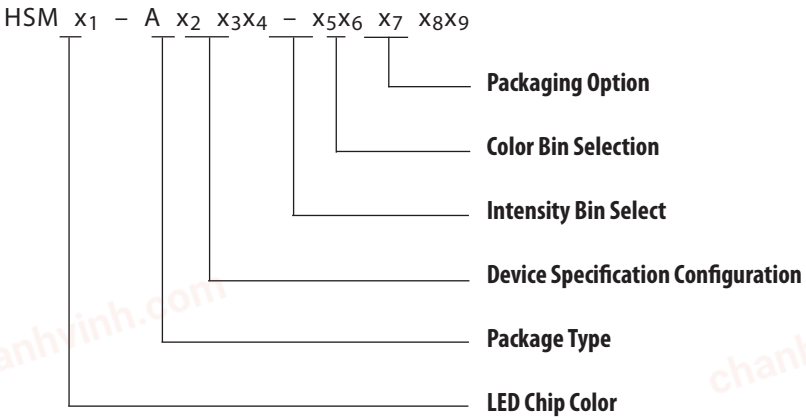

Absolute Maximum Ratings (T_A = 25°C)

Parameters	GaP	AlGaAs	AlInGaP Red, Amber	AlInGaP Yellow Green	GaN/InGaN
DC Forward Current[1]	30 mA	30 mA	30 mA[3,4]	20 mA[4]	20 mA
Peak Forward Current[2]	100 mA	100 mA	100 mA	100 mA	100 mA
Power Dissipation	78 mW	78 mW	72 mW	48 mW	120 mW
Reverse Voltage	5 V				
Junction Temperature	110°C				
Operating Temperature	–55°C to +100°C				
Storage Temperature	–55°C to +100°C				

Notes:
1. Derate linearly as shown in figure 4.
2. Duty factor = 10%, Frequency = 1kHz.
3. Drive Current between 10 mA and 30 mA are recommended for best long term performance.
4. Operation at current below 5 mA is not recommended.

chanhvinh.com

Optical Characteristics ($T_A = 25°C$)

Color	Peak Wavelength λ_{PEAK} (nm) Typ.	Dominant Wavelength λ_D (nm)[1] Typ.	Viewing Angle $2\theta_{1/2}$ (Degrees)[2] Typ.	Luminous Efficacy η_v (lm/W)[3] Typ.	Luminous Intensity/ Total Flux I_v (mcd) /Φ_v (mlm) Typ.
GaP Red	635	626	120	120	0.45
AlGaAs Red	645	637	120	63	0.45
AlInGaP Red	635	626	120	150	0.45
AlInGaP Red Orange	621	615	120	240	0.45
GaP Orange	600	602	120	380	0.45
AlInGaP Amber	592	590	120	480	0.45
GaP Yellow	583	585	120	580	0.45
AlInGaP Amber	592	590	120	480	0.45
GaP Yellow Green	565	569	120	590	0.45
GaP Emerald Green	558	560	120	650	0.45
InGaN Green	523	525	120	500	0.45
InGaN Blue	468	470	120	75	0.45
GaN Blue	428	462	120	65	0.45
AlInGaP Yellow Green	575	571	120	620	0.45

Notes:
1. The dominant wavelength, λ_D, is derived from the CIE Chromaticity Diagram and represents the color of the device.
2. $\theta_{1/2}$ is the off-axis angle where the luminous intensity is 1/2 the peak intensity.
3. Radiant intensity, I_e in watts/steradian, may be calculated from the equation $I_e = I_v/\eta_v$, where I_v is the luminous intensity in candelas and η_v is the luminous efficacy in lumens/watt.

Electrical Characteristics ($T_A = 25°C$)

Dice Technology	Forward Voltage V_F (Volts) @ I_F = 20mA Typ.	Max.	Reverse Voltage V_R @ 100 μA Min.	Reverse Voltage V_R @ 10 μA Min.
GaP	2.2	2.6	5	-
AS AlGaAs	1.9	2.6	5	-
AlInGaP	1.9	2.4	5	-
GaN Blue	3.9	4.3	-	5
InGaN	3.4	4.05	-	5

chanhvinh.com

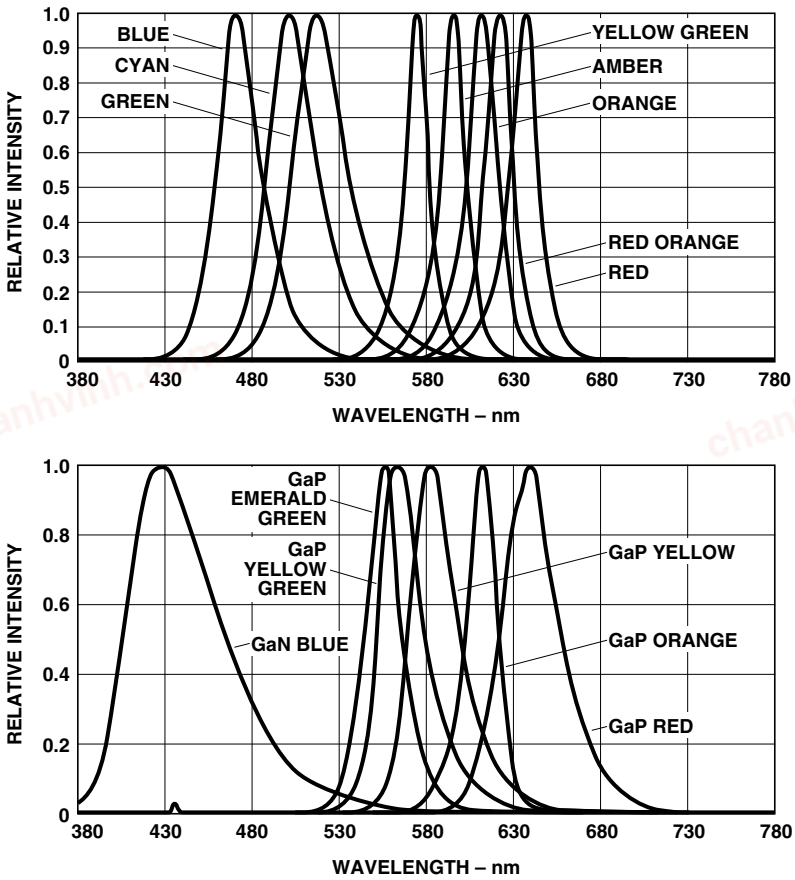

Figure 1. Relative intensity vs. wavelength

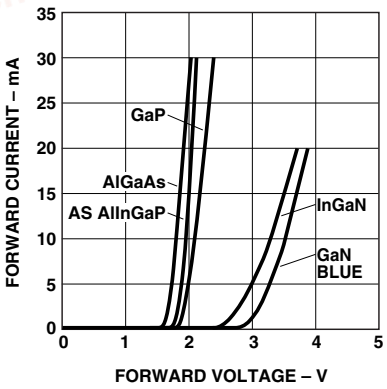

Figure 2. Forward current vs. forward voltage

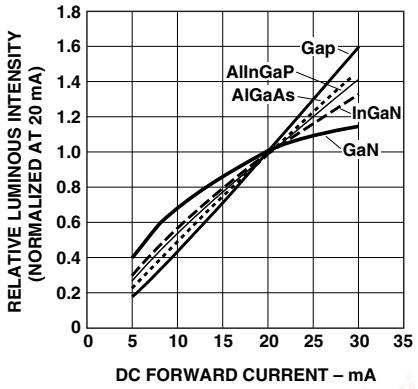

Figure 3. Relative intensity vs. forward voltage

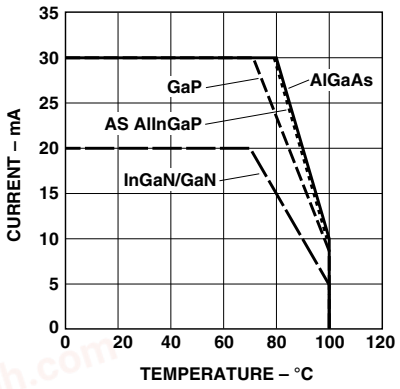

Figure 4a. Maximum forward current vs. ambient temperature. Derated based on $T_JMAX = 110°C$, $R\theta_{JA} = 500°C/W$ (1 chip on)

chanhvinh.com

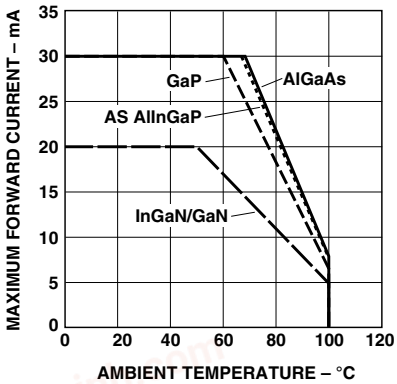

Figure 4b. Maximum forward current vs. ambient temperature. Derated based on $T_JMAX = 110°C$, $R\theta_{JA} = 700°C/W$ (3 chip on)

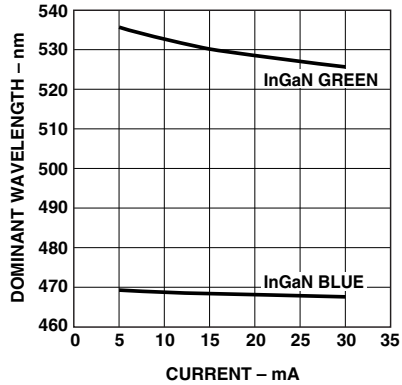

Figure 5. Dominant wavelength vs. forward current – InGaN

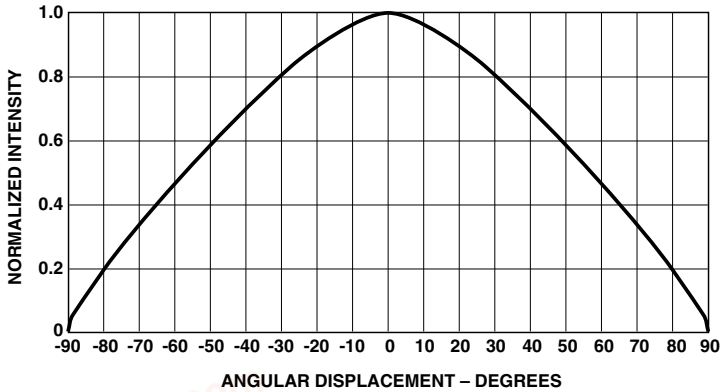

Figure 6. Radiation pattern

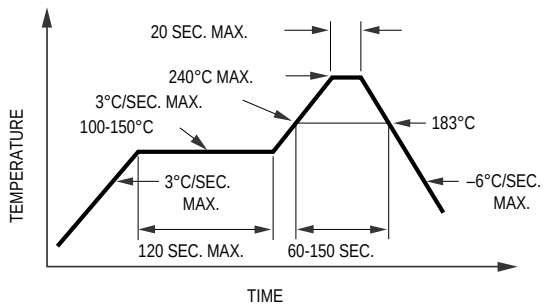

Figure 7. Recommended SnPb reflow soldering profile

Note: For detail information on reflow soldering of Avago surface mount LEDs, do refer to Avago Application Note AN 1060 Surface Mounting SMT LED Indicator Components.

chanhvinh.com

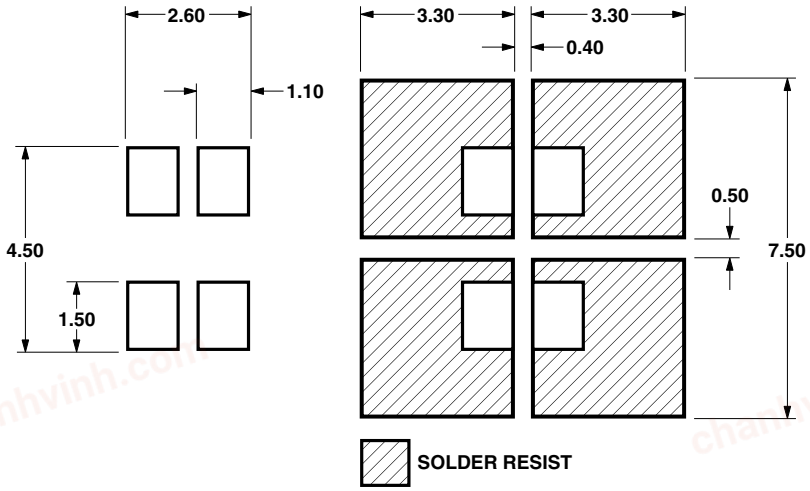

Figure 8. Recommended soldering pad pattern

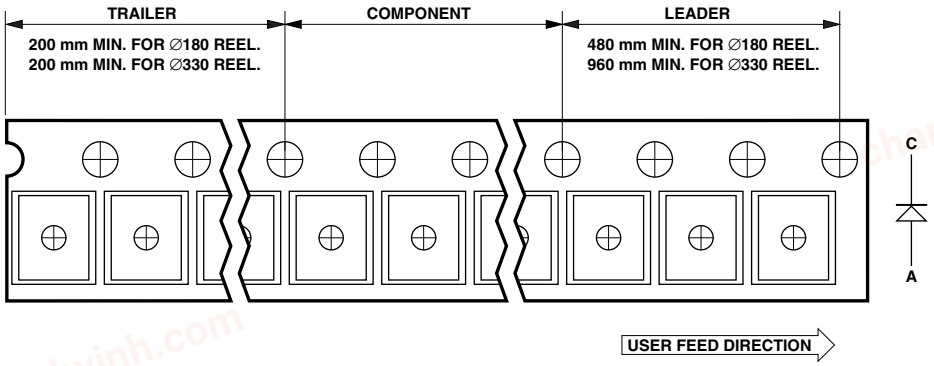

Figure 9. Tape leader and trailer dimension

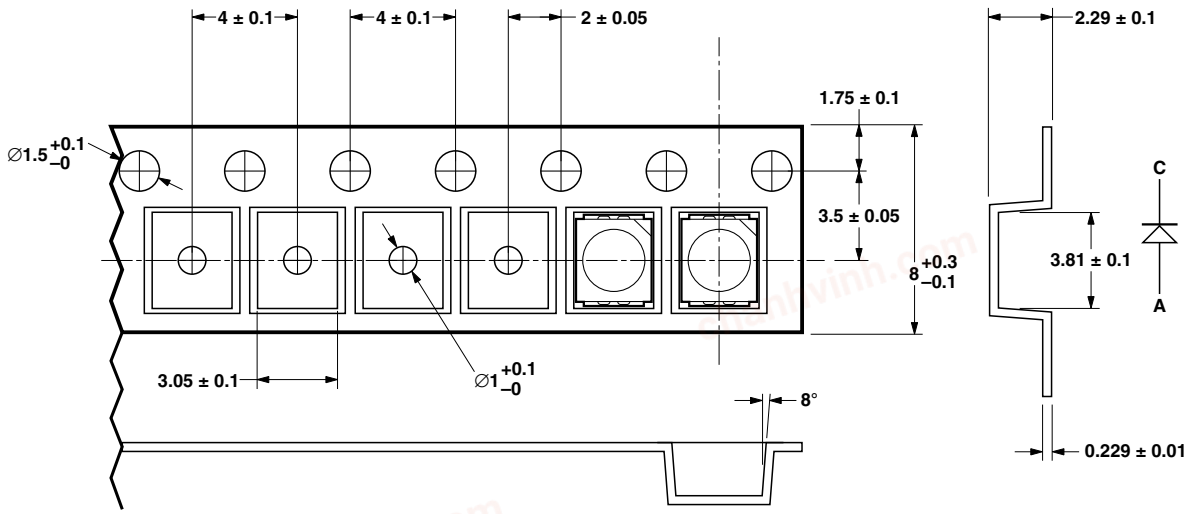

Figure 10. Tape leader and trailer dimension

chanhvinh.com

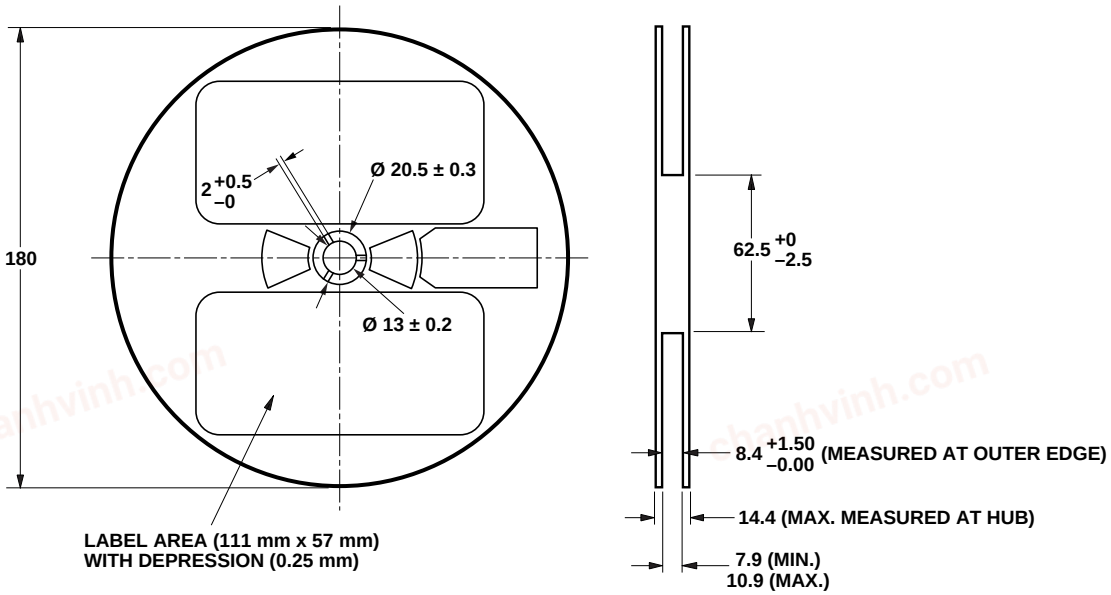

Figure 11. Reel dimension

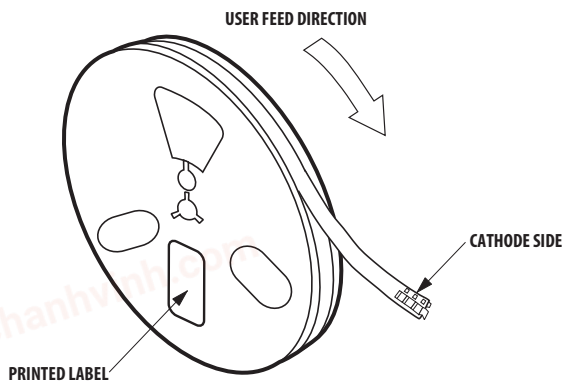

Figure 12. Reeling Orientation

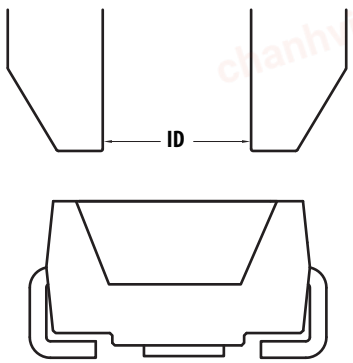

Note : Diameter "ID" should be bigger than 2.3mm

Figure 13. Recommended Pick and Place Nozzle Size

chanhvinh.com

Handling Precaution

The encapsulation material of the product is made of silicone for better reliability of the product. As silicone is a soft material, please do not press on the silicone or poke a sharp object onto the silicone. These might damage the product and cause premature failure. During assembly of handling, the unit should be held on the body only. Please refer to Avago Application Note AN 5288 for detail information.

Moisture Sensitivity

This product is qualified as Moisture Sensitive Level 2a per Jedec J-STD-020. Precautions when handling this moisture sensitive product is important to ensure the reliability of the product. Do refer to Avago Application Note AN5305 Handling of Moisture Sensitive Surface Mount Devices for details.

A. Storage before use

- Unopen moisture barrier bag (MBB) can be stored at <40°C/90%RH for 12 months. If the actual shelf life has exceeded 12 months and the HIC indicates that baking is not required, then it is safe to reflow the LEDs per the original MSL rating.
- It is not recommended to open the MBB prior to assembly (e.g. for IQC).

B. Control after opening the MBB

- The humidity indicator card (HIC) shall be read immediately upon opening of MBB.
- The LEDs must be kept at <30°C / 60%RH at all time and all high temperature related process including soldering, curing or rework need to be completed within 672 hours.

C. Control for unfinished reel

- For any unuse LEDs, they need to be stored in sealed MBB with desiccant or desiccator at <5%RH.

D. Control of assembled boards

- If the PCB soldered with the LEDs is to be subjected to other high temperature processes, the PCB need to be stored in sealed MBB with desiccant or desiccator at <5%RH to ensure no LEDs have exceeded their floor life of 672 hours.

E. Baking is required if:

- "10%" or "15%" HIC indicator turns pink.
- The LEDs are exposed to condition of >30°C / 60% RH at any time.
- The LEDs floor life exceeded 672 hours.

Recommended baking condition: 60±5°C for 20 hours.

chanhvinh.com

Iv Bin Select (X_5X_6)

Individual reel will contain parts from 1 half bin only.

X_5	Min. Iv Bin Selection	
For HSMF-A201-xxxxx HSMF-A204-xxxxx HSMF-A206-xxxxx		
	Minimum Intensity Bin	
	Color 1 (Red/Yellow/ Orange)	**Color 2 (Green)**
A	K2	L1
B	K2	L2
C	K2	M1
D	K2	M2
E	K2	N1
F	L1	L1
G	L1	L2
H	L1	M1
J	L1	M2
K	L1	N1
L	L2	L1
M	L2	L2
N	L2	M1
P	L2	M2
Q	L2	N1
R	M1	L1
S	M1	L2
T	M1	M1
U	M1	M2
V	M1	N1
W	M2	L1
X	M2	L2
Y	M2	M1
Z	M2	M2
1	M2	N1

For HSMF-A202-xxxxx		
	Minimum Intensity Bin	
	Color 1 (Red)	**Color 2 (Yellow)**
A	K2	K1
B	K2	K2
C	K2	L1
D	K2	L2
E	K2	M1
F	L1	K1
G	L1	K2
H	L1	L1
J	L1	L2
K	L1	M1
L	L2	K1
M	L2	K2
N	L2	L1
P	L2	L2
Q	L2	M1
R	M1	K1
S	M1	K2
T	M1	L1
U	M1	L2
V	M1	M1
W	M2	K1
X	M2	K2
Y	M2	L1
Z	M2	L2
1	M2	M1

For HSMF-A203-xxxxx HSMF-A205-xxxxx		
	Minimum Intensity Bin	
	Color 1 (Red/Orange)	**Color 2 (Green)**
A	K2	J1
B	K2	J2
C	K2	K1
D	K2	K2
E	K2	L1
F	L1	J1
G	L1	J2
H	L1	K1
J	L1	K2
K	L1	L1
L	L2	J1
M	L2	J2
N	L2	K1
P	L2	K2
Q	L2	L1
R	M1	J1
S	M1	J2
T	M1	K1
U	M1	K2
V	M1	L1
W	M2	J1
X	M2	J2
Y	M2	K1
Z	M2	K2
1	M2	L1

chanhvinh.com

For HSMF-A211-xxxxx		
	Minimum Intensity Bin	
	Color 1 (Red)	Color 2 (Green)
A	L2	L1
B	L2	L2
C	L2	M1
D	L2	M2
E	L2	N1
F	M1	L1
G	M1	L2
H	M1	M1
J	M1	M2
K	M1	N1
L	M2	L1
M	M2	L2
N	M2	M1
P	M2	M2
Q	M2	N1
R	N1	L1
S	N1	L2
T	N1	M1
U	N1	M2
V	N1	N1
W	N2	L1
X	N2	L2
Y	N2	M1
Z	N2	M2
1	N2	N1

Note: 0 represents no maximum bin limit.

For HSMF-A212-xxxxx		
	Minimum Intensity Bin	
	Color 1 (Red)	Color 2 (Yellow)
A	L2	K1
B	L2	K2
C	L2	L1
D	L2	L2
E	L2	M1
F	M1	K1
G	M1	K2
H	M1	L1
J	M1	L2
K	M1	M1
L	M2	K1
M	M2	K2
N	M2	L1
P	M2	L2
Q	M2	M1
R	N1	K1
S	N1	K2
T	N1	L1
U	N1	L2
V	N1	M1
W	N2	K1
X	N2	K2
Y	N2	L1
Z	N2	L2
1	N2	M1

For HSMF-A222-xxxxx		
	Minimum Intensity Bin	
	Color 1 (Red)	Color 2 (Amber)
A	P1	P1
B	P1	P2
C	P1	Q1
D	P1	Q2
E	P1	R1
F	P2	P1
G	P2	P2
H	P2	Q1
J	P2	Q2
K	P2	R1
L	Q1	P1
M	Q1	P2
N	Q1	Q1
P	Q1	Q2
Q	Q1	R1
R	Q2	P1
S	Q2	P2
T	Q2	Q1
U	Q2	Q2
V	Q2	R1
W	R1	P1
X	R1	P2
Y	R1	Q1
Z	R1	Q2
1	R1	R1
2	R2	P1
3	R2	P2
4	R2	Q1
5	R2	Q2
6	R2	R1

chanhvinh.com

For HSMF-A341-xxxxx

	Minimum Intensity Bin		
	Color 1 (Red/Red Orange)	Color 2 (Green)	Color 3 (Blue)
A	P1	R1	N1
B	P1	R1	N2
C	P1	R1	P1
D	P1	R2	N1
E	P1	R2	N2
F	P1	R2	P1
G	P1	S1	N1
H	P1	S1	N2
J	P1	S1	P1
K	P2	R1	N1
L	P2	R1	N2
M	P2	R1	P1
N	P2	R2	N1
P	P2	R2	N2
Q	P2	R2	P1
R	P2	S1	N1
S	P2	S1	N2
T	P2	S1	P1
U	Q1	R1	N1
V	Q1	R1	N2
W	Q1	R1	P1
X	Q1	R2	N1
Y	Q1	R2	N2
Z	Q1	R2	P1
1	Q1	S1	N1
2	Q1	S1	N2
3	Q1	S1	P1
4	Q2	R1	N1
5	Q2	R1	N2
6	Q2	R1	P1
7	Q2	R2	N1
8	Q2	R2	N2
9	Q2	R2	P1

X_6 Number of Half bins from X_5

For HSMF-A2xx-xxxxx

	Color 1	Color 2
0	0	0
A	0	5
B	0	4
C	0	3
D	0	2
E	5	0
F	5	5
G	5	4
H	5	3
J	5	2
K	4	0
L	4	5
M	4	4
N	4	3
P	4	2
Q	3	0
R	3	5
S	3	4
T	3	3
U	3	2
V	2	0
W	2	5
X	2	4
Y	2	3
Z	2	2

Note: 0 represents no maximum bin limit.

For HSMF-A3xx-xxxxx

	Color 1 (Red/Red Orange)	Color 2 (Green)	Color 3 (Blue)
0	0	0	0
A	5	5	5
B	5	5	4
C	5	5	3
D	5	4	5
E	5	4	4
F	5	4	3
G	5	3	5
H	5	3	4
J	5	3	3
K	4	5	5
L	4	5	4
M	4	5	3
N	4	4	5
P	4	4	4
Q	4	4	3
R	4	3	5
S	4	3	4
T	4	3	3
U	3	5	5
V	3	5	4
W	3	5	3
X	3	4	5
Y	3	4	4
Z	3	4	3
1	3	3	5
2	3	3	4
3	3	3	3

Note: 0 represents no maximum bin limit.

Intensity Bin Limits

Bin ID	Min. (mcd)	Max. (mcd)
J1	4.50	5.60
J2	5.60	7.20
K1	7.20	9.00
K2	9.00	11.20
L1	11.20	14.00
L2	14.00	18.00
M1	18.00	22.40
M2	22.40	28.50
N1	28.50	35.50
N2	35.50	45.00
P1	45.00	56.00
P2	56.00	71.50
Q1	71.50	90.00
Q2	90.00	112.50
R1	112.50	140.00
R2	140.00	180.00
S1	180.00	224.00
S2	224.00	285.00
T1	285.00	355.00
T2	355.00	450.00
U1	450.00	560.00
U2	560.00	715.00
V1	715.00	900.00
V2	900.00	1125.00

Tolerance of each bin limit = ±10%.

chanhvinh.com

chanhvinh.com

Color Bin Select (X_7)

Individual reel will contain parts from 1 full bin only.

X_7	Color Bin Combinations	
For HSMF-A202-xxxxx HSMF-A203-xxxxx HSMF-A212-xxxxx HSMF-A222-xxxxx		
	Color 1 (Red)	**Color 2 (Emerald Green/ Yellow/Blue)**
0	0	0
A	0	ABC
B	0	ABCD
C	0	ABCDE
D	0	BCD
E	0	BCDE
F	0	BCDEF
G	0	CDE
H	0	DEF
J	0	CDEF
K	0	AB
L	0	BC
M	0	CD
N	0	DE
P	0	EF

Note: 0 represents full distribution.

For HSMF-A201-xxxxx HSMF-A211-xxxxx		
	Color 1 (Red)	**Color 2 (Yellow Green)**
0	0	0
A	0	EFG
B	0	FGH
C	0	EF
D	0	FG
E	0	GH

Note: 0 represents full distribution.

For HSMF-A205-xxxxx		
	Color 1 (Yellow/Amber/ Orange)	**Color 2 (Emerald Green/Blue)**
0	0	0
A	ABC	ABC
B	BCD	ABC
C	CDE	ABC
D	ABC	BCD
E	BCD	BCD
F	CDE	BCD
G	ABC	CDE
H	BCD	CDE
J	CDE	CDE
K	DEF	ABC
L	DEF	BCD
M	DEF	CDE
N	AB	AB
P	BC	AB
Q	CD	AB
R	DE	AB
S	AB	BC
T	BC	BC
U	CD	BC
V	DE	BC
W	AB	CD
X	BC	CD
Y	CD	CD
Z	DE	CD
1	AB	DE
2	BC	DE
3	CD	DE
4	DE	DE
5	EF	AB
6	EF	BC
7	EF	CD

Note: 0 represents full distribution.

For HSMF-A204-xxxxx HSMF-A206-xxxxx		
	Color 1 (Yellow/ Amber/ Orange)	**Color 2 (Yellow Green)**
0	0	0
A	ABC	EFG
B	BCD	EFG
C	CDE	EFG
D	DEF	EFG
E	ABC	FGH
F	BCD	FGH
G	CDE	FGH
H	DEF	FGH
J	AB	EF
K	BC	EF
L	CD	EF
M	DE	EF
N	EF	EF
P	AB	FG
Q	BC	FG
R	CD	FG
S	DE	FG
T	EF	FG
U	AB	GH
V	BC	GH
W	CD	GH
X	DE	GH
Y	EF	GH

Note: 0 represents full distribution.

chanhvinh.com

For HSMF-A3xx-xxxxx	Color 1	Color 2	Color 3
0	0	0	0
A	0	0	ABC
B	0	0	BCD
C	0	0	AB
D	0	0	BC
E	0	0	CD
F	0	ABC	0
G	0	ABC	ABC
H	0	ABC	BCD
J	0	ABC	AB
K	0	ABC	BC
L	0	ABC	CD
M	0	BCD	0
N	0	BCD	ABC
P	0	BCD	BCD
Q	0	BCD	AB
R	0	BCD	BC
S	0	BCD	CD
T	0	AB	ABC
U	0	AB	BCD
V	0	AB	AB
W	0	AB	BC
X	0	AB	CD
Y	0	BC	ABC
Z	0	BC	BCD
1	0	BC	AB
2	0	BC	BC
3	0	BC	CD
4	0	CD	ABC
5	0	CD	BCD
6	0	CD	AB
7	0	CD	BC
8	0	CD	CD

Note: 0 represents full distribution.

Color Bin Limits

Blue	Min. (nm)	Max. (nm)
A	460.0	465.0
B	465.0	470.0
C	470.0	475.0
D	475.0	480.0

Green	Min. (nm)	Max. (nm)
A	515.0	520.0
B	520.0	525.0
C	525.0	530.0
D	530.0	535.0

Emerald Green	Min. (nm)	Max. (nm)
A	552.5	555.5
B	555.5	558.5
C	558.5	561.5
D	561.5	564.5

Yellow Green	Min. (nm)	Max. (nm)
E	564.5	567.5
F	567.5	570.5
G	570.5	573.5
H	573.5	576.5

Amber/ Yellow	Min. (nm)	Max. (nm)
A	582.0	584.5
B	584.5	587.0
C	587.0	589.5
D	589.5	592.0
E	592.0	594.5
F	594.5	597.0

Orange	Min. (nm)	Max. (nm)
A	597.0	600.0
B	600.0	603.0
C	603.0	606.0
D	606.0	609.0
E	609.0	612.0

Red Orange	Min. (nm)	Max. (nm)
A	611.0	616.0
B	616.0	620.0

Red	Min. (nm)	Max. (nm)
Full Distribution		

Tolerance of each bin limit = ±1 nm.

Packaging Option (X_8X_9)

X_8X_9	
J1	20 mA test current, Top Mount, 7 inch Reel

For product information and a complete list of distributors, please go to our website: **www.avagotech.com**

Avago, Avago Technologies, and the A logo are trademarks of Avago Technologies in the United States and other countries.
Data subject to change. Copyright © 2005-2012 Avago Technologies. All rights reserved. Obsoletes 5989-1210EN
AV02-0501EN - February 2, 2012