chanhvinh.com

HSME-Cxxx
AlInGaP Green ChipLED

Data Sheet



HSME-C110 / C120 / C150 / C170 / C177 / C190 / C191 / C197 / C265

Description

This chip-type LED utilizes Aluminum Indium Gallium Phosphide (AlInGaP) material technology. The AlInGaP material has a very high luminous efficiency, capable of producing high light output.

These chipLEDs come in top mounting, top emitting packages (HSMx-C150/170/177/190/191/197), top mounting, side emitting packages (HSMx-C110/120) or reverse mounting, top emitting package (HSMx-C265).

All packages are binned by both color and intensity.

In order to facilitate pick and place operation, these chipLEDs are shipped in Tape & Reel, with 4000 units per reel for HSMx-C120/170/ 177/190/191/197 and 3000 units per reel for HSMx-C110/C150/265.

These packages are compatible with reflow soldering process.

Features

- **Small size**
- **Industry standard footprint**
- **Operating temperature range of –30°C to +85°C**
- **Compatible with IR soldering**
- **Available in 8 mm tape on 7" diameter reel**
- **Reel sealed in zip-locked moisture barrier bags**

Applications

- **Membrane switch indicator**
- **LCD backlighting**
- **Pushbutton backlighting**
- **Front panel indicator**
- **Symbol backlighting**
- **Keypad backlighting**

CAUTION: *HSME-Cxxx LEDs are Class 1A ESD sensitive per JESD22-A114C.01. Please observe appropriate precautions during handling and processing. Refer to Application Note AN-1142 for additional details.*

Avago reserves the right to alter prices, specification, features, capabilities, functions, release dates, and remove availability of the product(s) at anytime.

chanhvinh.com

Package Dimensions

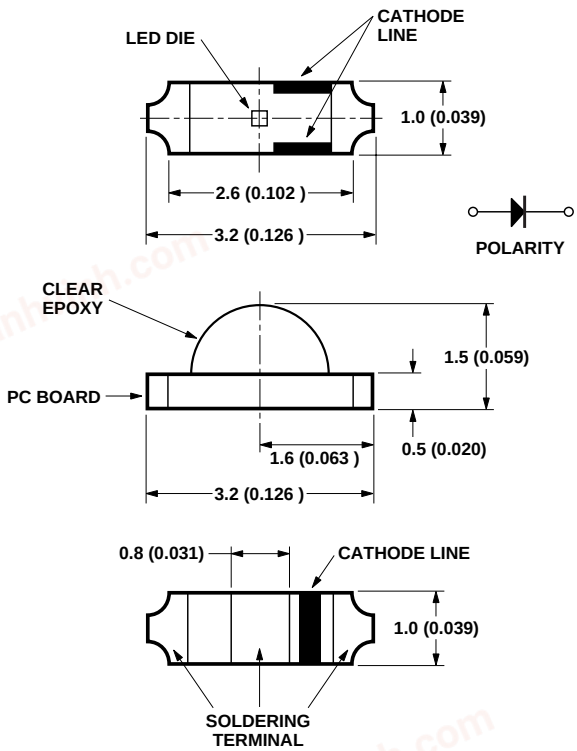

HSMx-C110

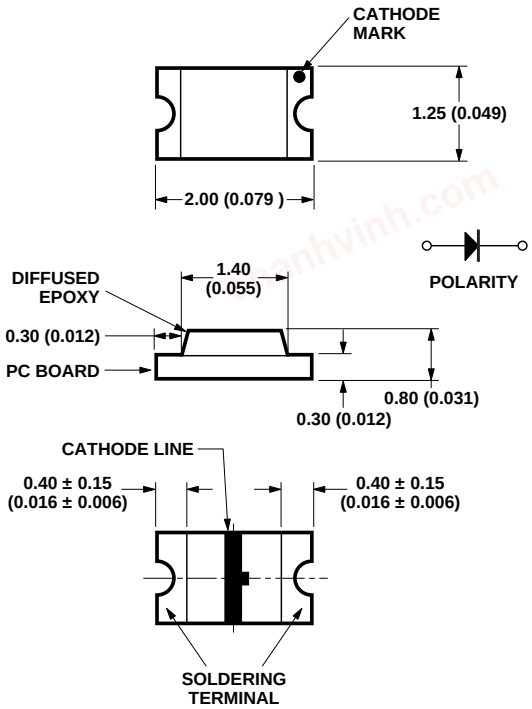

HSMx-C170

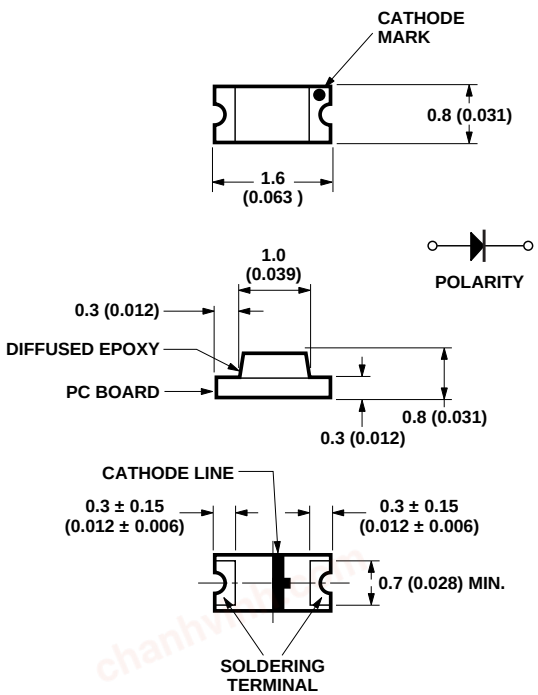

HSMx-C190

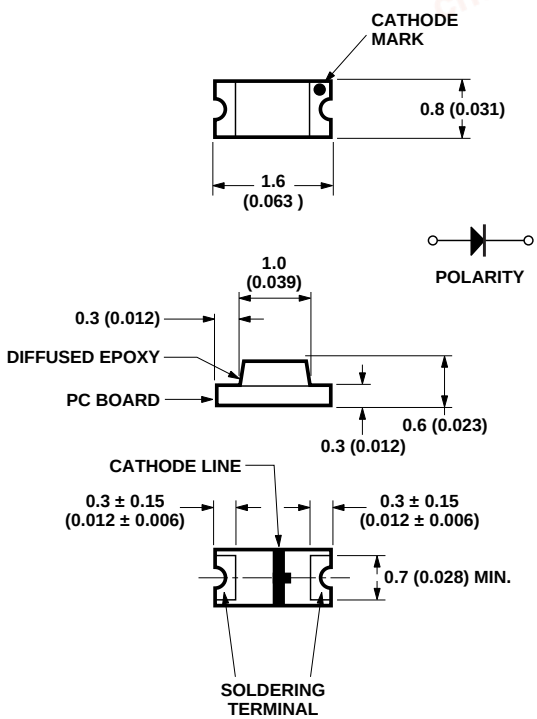

HSMx-C191

NOTES:
1. ALL DIMENSIONS IN MILLIMETERS (INCHES).
2. TOLERANCE IS ± 0.1 mm (± 0.004 IN.) UNLESS OTHERWISE SPECIFIED.

chanhvinh.com

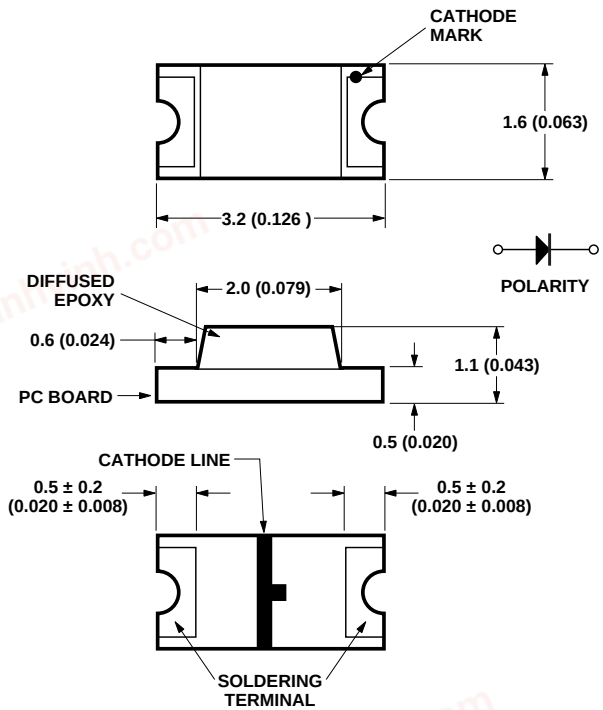

HSMx-C150

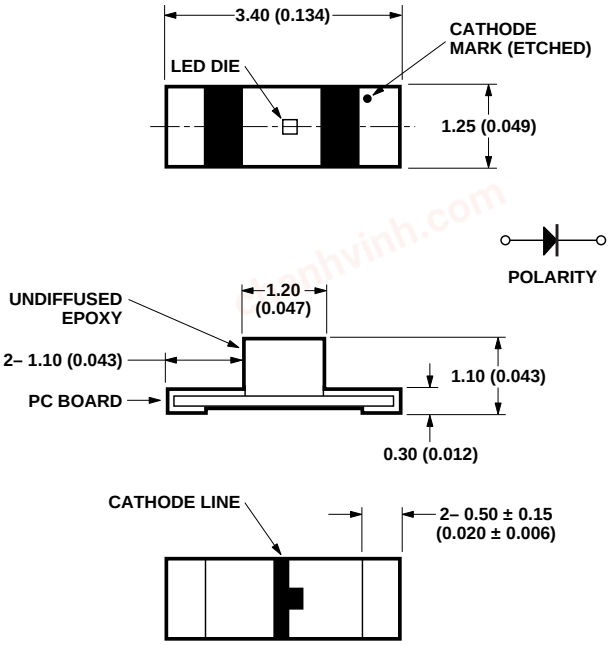

HSMx-C265

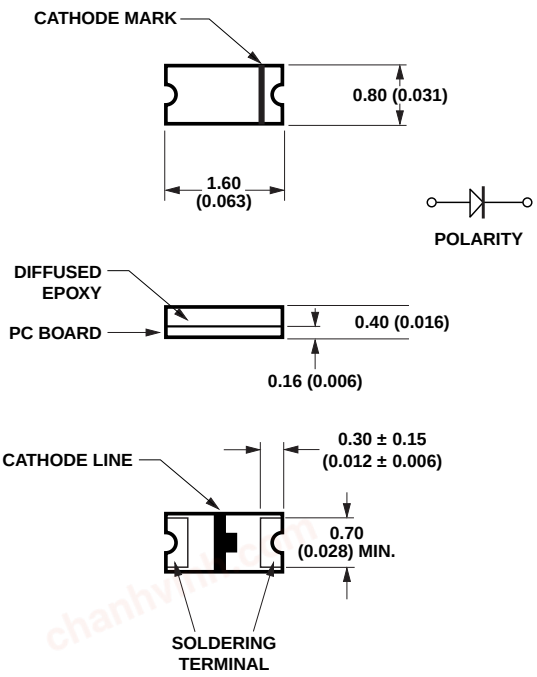

HSMx-C197

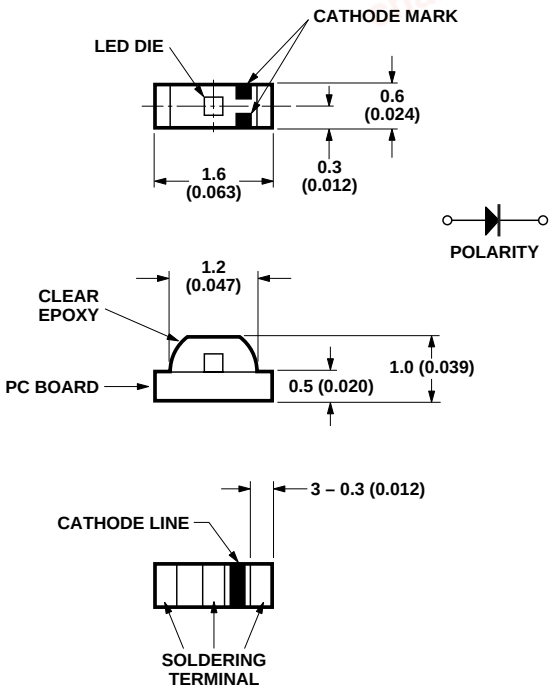

HSMx-C120

NOTES:
1. ALL DIMENSIONS IN MILLIMETERS (INCHES).
2. TOLERANCE IS ± 0.1 mm (± 0.004 IN.) UNLESS OTHERWISE SPECIFIED.

chanhvinh.com

Package Dimensions, continued

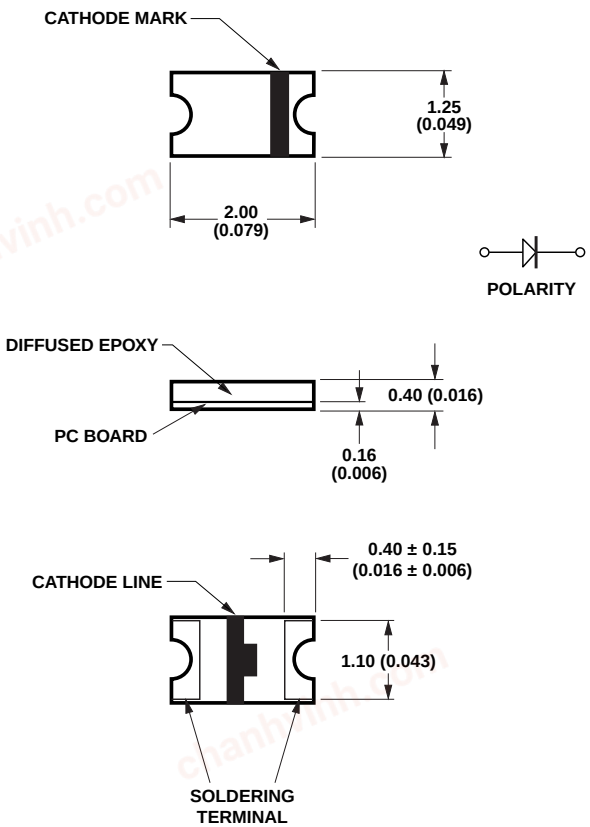

HSMx-C177

NOTES:
1. ALL DIMENSIONS IN MILLIMETERS (INCHES).
2. TOLERANCE IS ± 0.1 mm (± 0.004 IN.) UNLESS OTHERWISE SPECIFIED.

chanhvinh.com

Device Selection Guide

Package Dimension (mm)[1,2]	AlInGaP Green	Package Description
1.6 (L) x 0.8 (W) x 0.6 (H)	HSME-C191	Untinted, Diffused
1.6 (L) x 0.8 (W) x 0.4 (H)	HSME-C197	Untinted, Diffused
1.6 (L) x 0.8 (W) x 0.8 (H)	HSME-C190	Untinted, Diffused
2.0 (L) x 1.25 (W) x 0.8 (H)	HSME-C170	Untinted, Diffused
2.0 (L) x 1.25 (W) x 0.4 (H)	HSME-C177	Untinted, Diffused
1.6 (L) x 1.0 (W) x 0.6 (H)	HSME-C120	Untinted, Non-diffused
3.2 (L) x 1.5 (W) x 1.0 (H)	HSME-C110	Untinted, Non-diffused
3.2 (L) x 1.6 (W) x 1.1 (H)	HSME-C150	Untinted, Diffused
3.4 (L) x 1.25 (W) x 1.1 (H)	HSME-C265	Untinted, Non-diffused

Notes:
1. Dimensions in mm.
2. Tolerance ± 0.1 mm unless otherwise noted.

Absolute Maximum Ratings at T_A = 25°C

Parameter	HSME-C110/120/170/177/190/191/197/150/265	Units
DC Forward Current[1,2]	20	mA
Power Dissipation	52	mW
Reverse Voltage (I_R = 100 μA)	5	V
LED Junction Temperature	95	°C
Operating Temperature Range	–30 to +85	°C
Storage Temperature Range	–40 to +85	°C
Soldering Temperature	See reflow soldering profile (Figures 6 & 7)	

Notes:
1. Derate linearly as shown in Figure 4.
2. Drive current above 5 mA is recommended for best long term performance.

Electrical Characteristics at T_A = 25°C

Part Number	Forward Voltage V_F (Volts) @ I_F = 20 mA Typ.	Max.	Reverse Breakdown V_R (Volts) @ I_R = 100 μA Min.	Capacitance C (pF), V_F = 0, f = 1 MHz Typ.	Thermal Resistance $R\theta_{J-PIN}$ (°C/W) Typ.
HSME-C110/120	2.1	2.6	5	18	550
HSME-C150/170/177/190/191/197	2.1	2.6	5	15	450
HSME-C265	2.1	2.6	5	16	450

chanhvinh.com

Optical Characteristics at T_A = 25°C

Part Number	Luminous Intensity I_V (mcd) @ 20 mA[1] Min.	Typ.	Peak Wavelength λ_{peak} (nm) Typ.	Color, Dominant Wavelength λ_d[2] (nm) Typ.	Viewing Angle 2 $\theta_{1/2}$ Degrees[3] Typ.	Luminous Efficacy ηV (lm/w) Typ.
HSME-C110	18	52	570	572	130	570
HSME-C120	18	52	570	572	155	570
HSME-150/170/190/191	18	50	570	572	170	570
HSME-C177/197	18	50	570	572	130	570
HSME-C265	18	50	570	572	150	570

Notes:
1. The luminous intensity, I_V, is measured at the peak of the spatial radiation pattern, which may not be aligned with the mechanical axis of the lamp package.
2. The dominant wavelength, λ_d, is derived from the CIE Chromatically Diagram and represents the perceived color of the device.
3. $\theta_{1/2}$ is the off-axis angle where the luminous intensity is 1/2 the peak intensity.

Green Color Bin Limits[1]

Bin ID	Dom. Wavelength (nm) Min.	Max.
A	561.5	564.5
B	564.5	567.5
C	567.5	570.5
D	570.5	573.5
E	573.5	576.5

Tolerance: ± 1 nm

Light Intensity (I_V) Bin Limits[1]

Bin ID	Intensity (mcd) Min.	Max.
A	0.11	0.18
B	0.18	0.29
C	0.29	0.45
D	0.45	0.72
E	0.72	1.10
F	1.10	1.80
G	1.80	2.80
H	2.80	4.50
J	4.50	7.20
K	7.20	11.20
L	11.20	18.00
M	18.00	28.50
N	28.50	45.00
P	45.00	71.50
Q	71.50	112.50
R	112.50	180.00
S	180.00	285.00
T	285.00	450.00
U	450.00	715.00

Tolerance: ± 15%

Notes:
1. Bin categories are established for classification of products. Products may not be available in all categories. Please contact your Avago representative for information on currently available bins.
2. The Iv binning specification set-up is for lowest allowable Iv binning only. There are no upper Iv bin limits.

chanhvinh.com

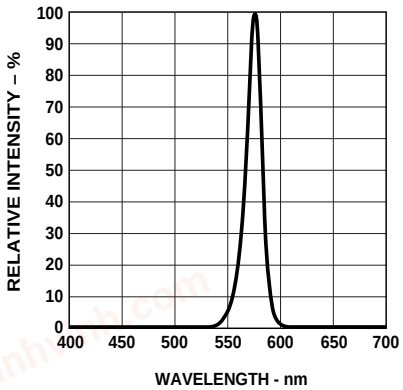

Figure 1. Relative intensity vs. wavelength.

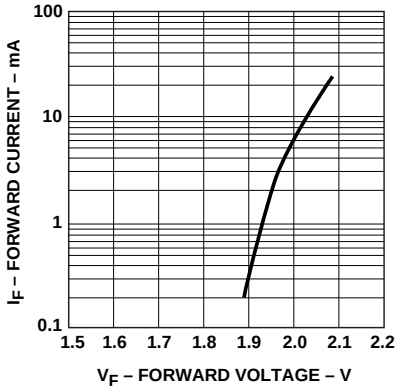

Figure 2. Forward current vs. forward voltage.

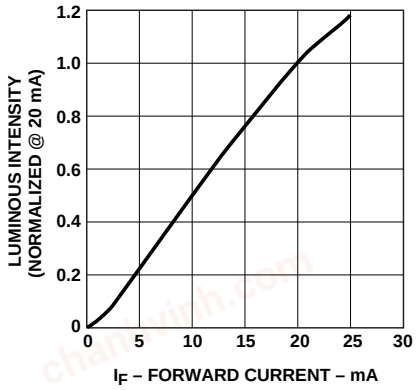

Figure 3. Luminous intensity vs. forward current.

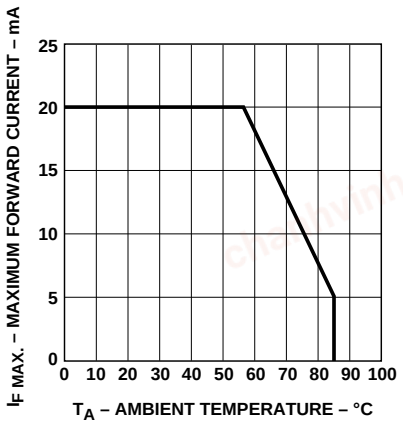

Figure 4. Maximum forward current vs. ambient temperature.

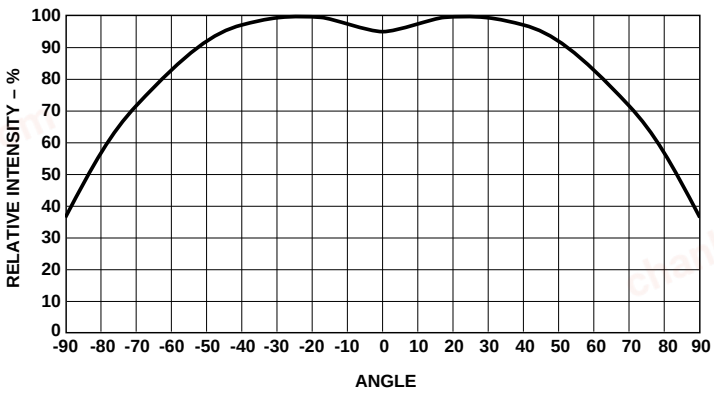

Figure 5a. Relative intensity vs. angle for HSMx-C170, HSMx-C190, HSMx-C191, and HSMx-C150.



Figure 5b. Relative intensity vs. angle for HSMx-C177 and HSMx-C197.

chanhvinh.com

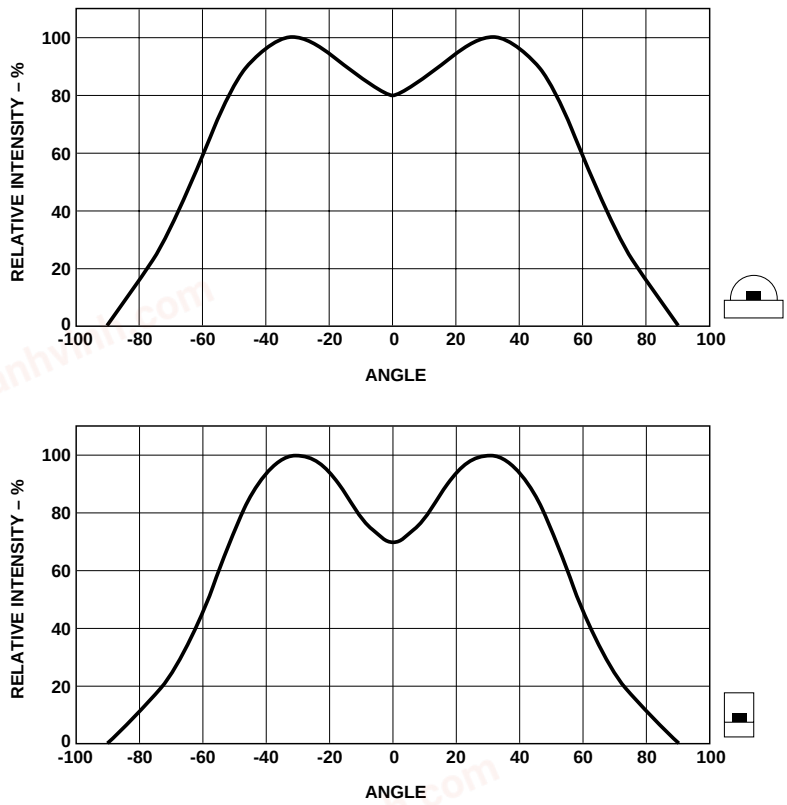

Figure 5c. Relative intensity vs. angle for HSMx-C110.

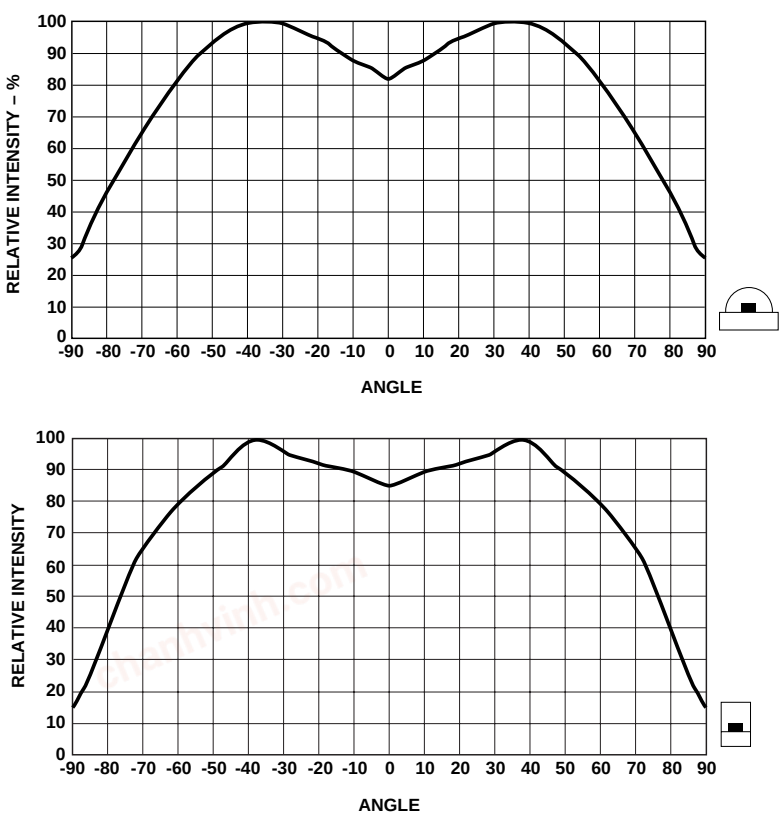

Figure 5d. Relative intensity vs. angle for HSMx-C120.

chanhvinh.com

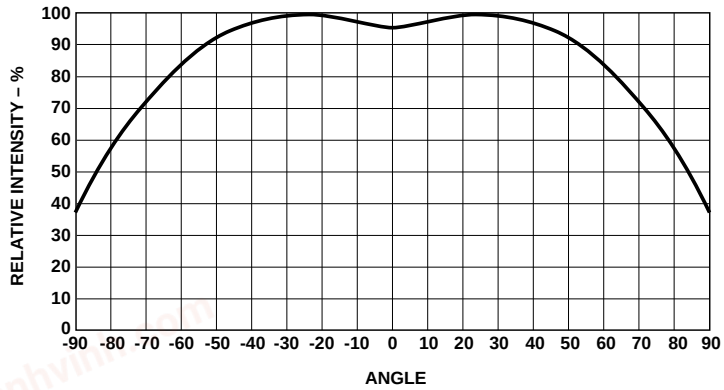

Figure 5e. Relative intensity vs. angle for HSMx-C265.

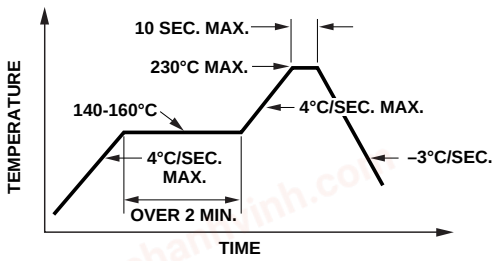

Figure 6. Recommended reflow soldering profile.

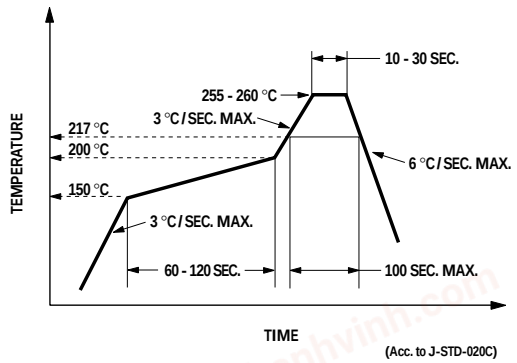

Figure 7. Recommended Pb-free reflow soldering profile.

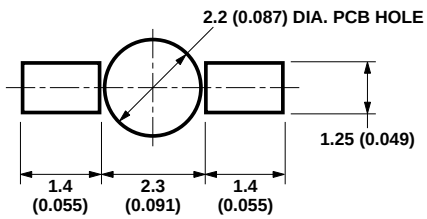

Figure 8. Recommended soldering pattern for HSMx-C265.

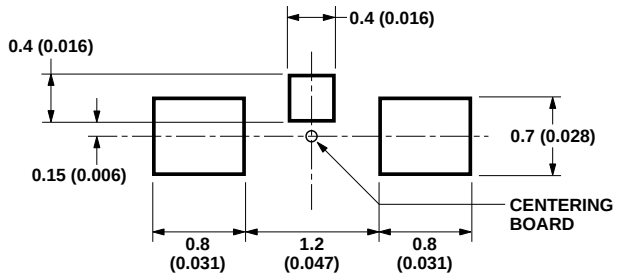

Figure 9. Recommended soldering pattern for HSMx-C120.

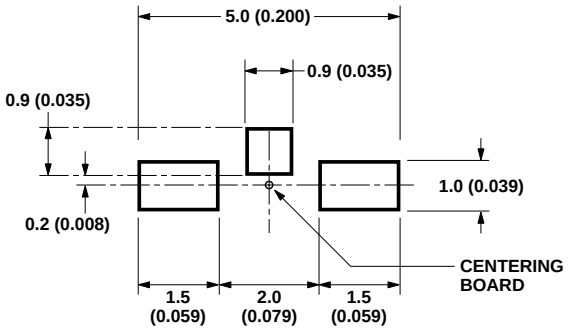

Figure 10. Recommended soldering pattern for HSMx-C110.

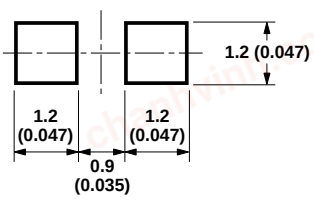

Figure 11. Recommended soldering pattern for HSMx-C170 and HSMx-C177.

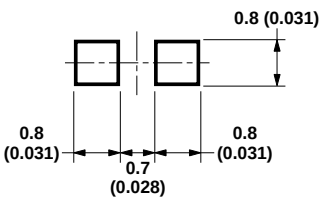

Figure 12. Recommended soldering pattern for HSMx-C190, HSMx-C191 and HSMx-C197.

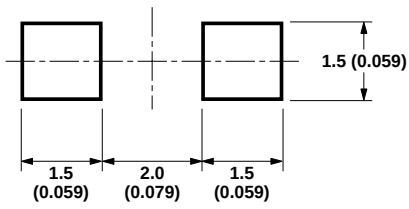

Figure 13. Recommended soldering pattern for HSMx-C150.

NOTE:
1. ALL DIMENSIONS IN MILLIMETERS (INCHES).

chanhvinh.com

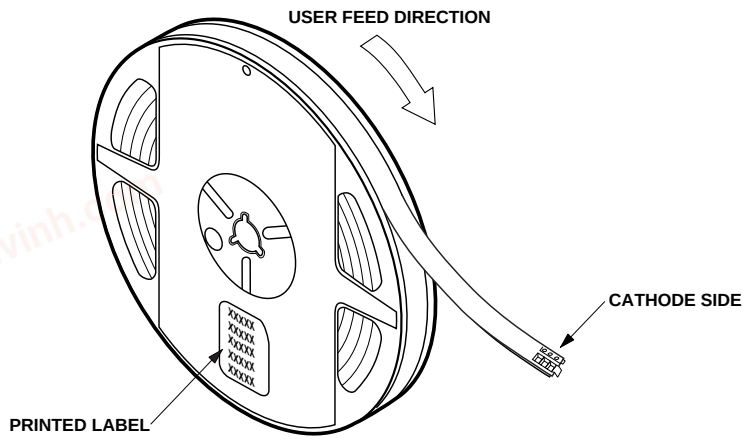

Figure 14. Reeling orientation.

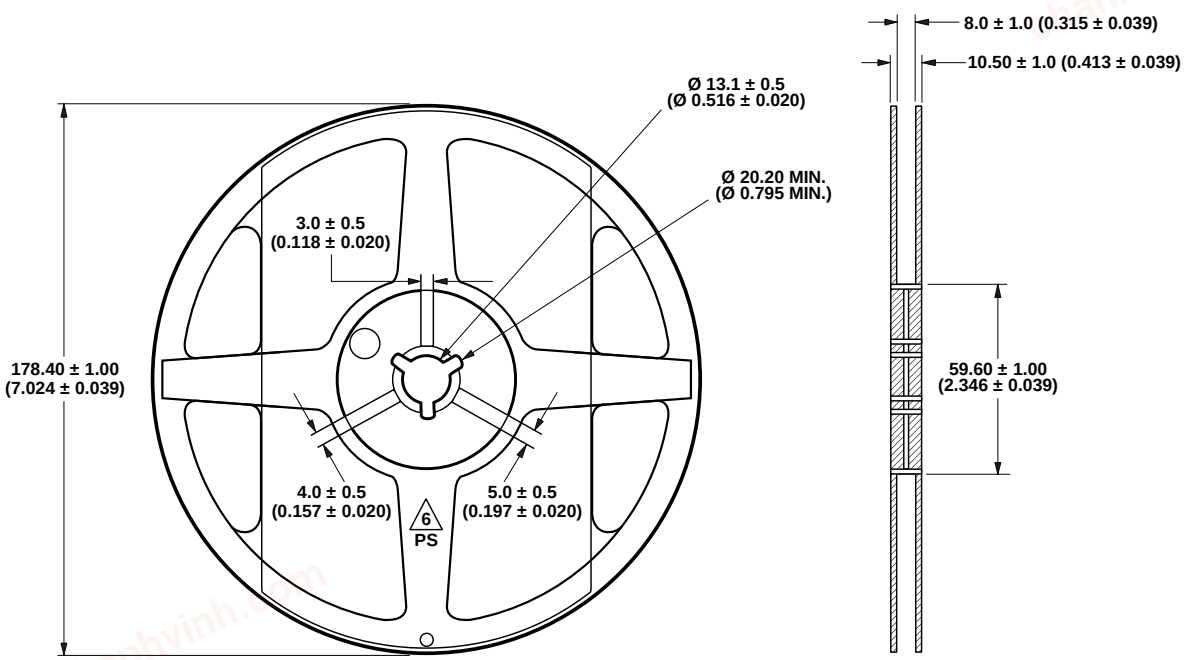

Figure 15. Reel dimensions.

NOTE:
1. ALL DIMENSIONS IN MILLIMETERS (INCHES).

chanhvinh.com

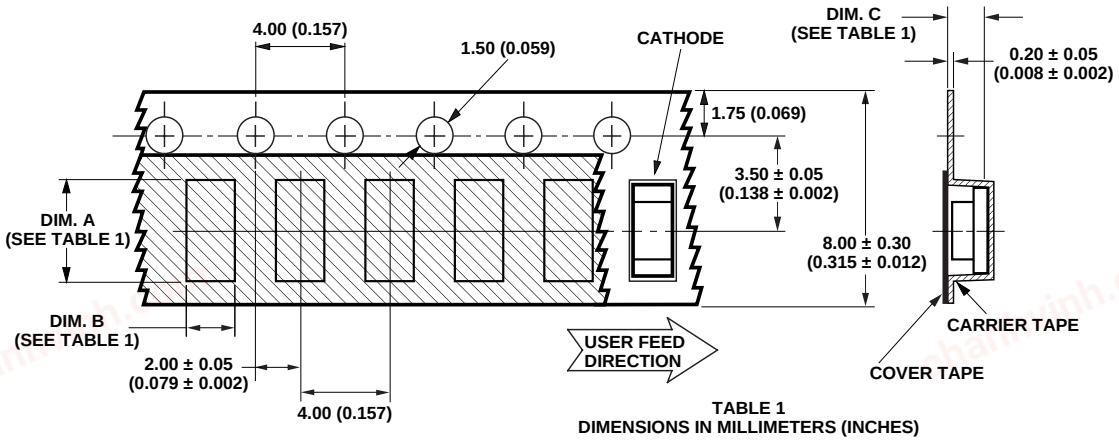

TABLE 1
DIMENSIONS IN MILLIMETERS (INCHES)

PART NUMBER	DIM. A ± 0.10 (± 0.004)	DIM. B ± 0.10 (± 0.004)	DIM. C ± 0.10 (± 0.004)
HSMx-C191 SERIES	1.86 (0.073)	0.89 (0.035)	0.87 (0.034)
HSMx-C190 SERIES	1.75 (0.069)	0.90 (0.035)	0.90 (0.035)
HSMx-C170 SERIES	2.30 (0.091)	1.45 (0.057)	0.95 (0.037)
HSMx-C110 SERIES	3.40 (0.134)	1.70 (0.067)	1.20 (0.047)
HSMx-C150 SERIES	3.50 (0.138)	1.88 (0.074)	1.27 (0.050)
HSMx-C120 SERIES	1.90 (0.075)	1.15 (0.045)	0.80 (0.031)
HSMx-C197 SERIES	1.75 (0.069)	0.95 (0.037)	0.60 (0.024)
HSMx-C177 SERIES	2.30 (0.091)	1.40 (0.055)	0.60 (0.024)

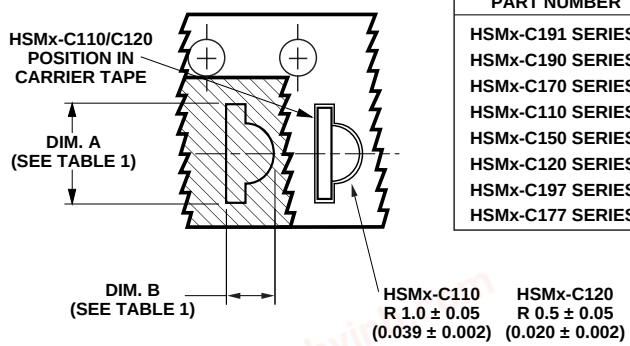

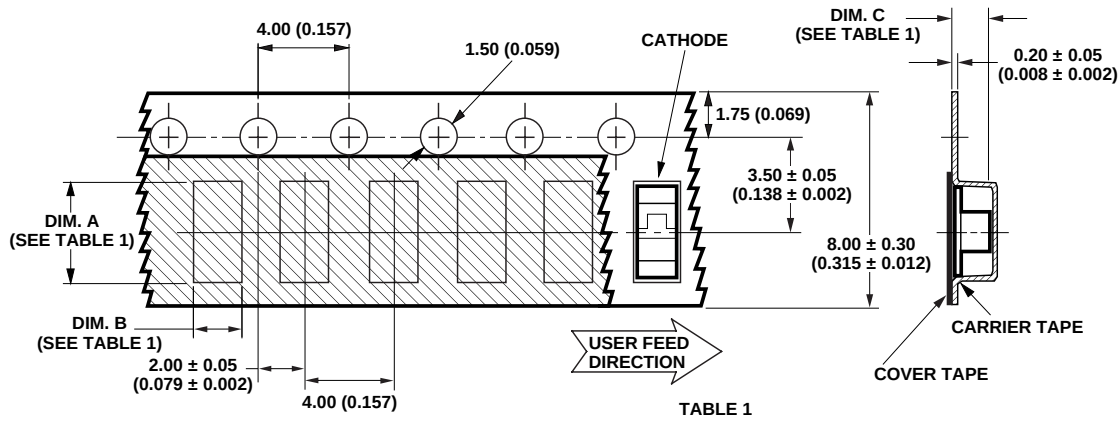

TABLE 1
DIMENSIONS IN MILLIMETERS (INCHES)

PART NUMBER	DIM. A ± 0.10 (± 0.004)	DIM. B ± 0.10 (± 0.004)	DIM. C ± 0.10 (± 0.004)
HSMx-C265 SERIES	3.70 (0.146)	1.45 (0.057)	1.30 (0.051)

Figure 16. Tape dimensions.

NOTES:
1. ALL DIMENSIONS IN MILLIMETERS (INCHES).
2. TOLERANCE IS ± 0.1 mm (± 0.004 IN.) UNLESS OTHERWISE SPECIFIED.

chanhvinh.com

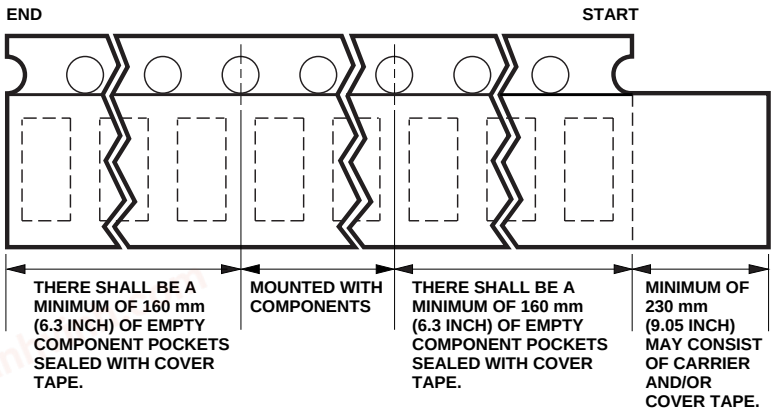

Figure 17. Tape leader and trailer dimensions.

Convective IR Reflow Soldering

For more information on soldering, refer to Application Note 1060, *Surface Mounting SMT LED Indicator Components*.

Storage Condition: 5 to 30° C @ 60% RH max.

Baking is required under the condition:

a) Humidity Indicator Card is >10% when read at 23 ± 5°C

b) Device exposed to factory conditions <30°C/60% RH more than 672 hours.

Baking recommended condition: 60 ± 5°C for 20 hours.

Avago, Avago Technologies, and the A logo are trademarks of Avago Technologies Limited in the United States and other countries.
Data subject to change. Copyright © 2008 Avago Technologies Limited. All rights reserved. Obsoletes AV01-0684EN
AV02-0976EN January 8, 2008