chanhvinh.com

HSMx-C110/C170/C190/C191/C150

High Performance ChipLED

Data Sheet



HSMA-C110/C170/C190/C191/C150
HSML-C110/C170/C190/C191/C150
HSMC-C110/C170/C190/C191/C150
HSMZ-C110/C170/C190

Description

These chip-type LEDs utilize Aluminum Indium Gallium Phosphide (AlInGaP) material technology. The AlInGaP material has a very high luminous efficiency, capable of producing high light output over a wide range of drive currents. The available colors in this surface mount series are 592 nm Amber, 605 nm Orange, 626/631 nm Red for AS AlInGaP.

All packages are binned by both color and intensity, except for red color.

These ChipLEDs come either in two top emitting packages (HSMx-C170/C190/C191/C150) or in a side emitting package (HSMx-C110). The right angle ChipLEDs are suitable for applications such as LCD backlighting. The top emitting ChipLEDs with wide viewing angle are suitable for light piping and direct backlighting of keypads and panels. In order to facilitate pick and place operation, these ChipLEDs are shipped in tape and reel, with 4000 units per reel for HSMx-C170/C190/C191 and 3000 units per reel for HSMx-C110/C150.

These packages are compatible with IR soldering process.

Features

- High brightness AlInGaP material
- Small size
- Industry standard footprint
- Diffused optics
- Top emitting or right angle emitting
- Available in 3 colors (red, orange, amber)
- Compatible with IR soldering
- Available in 8 mm tape on 7" diameter reel
- Reel sealed in zip locked moisture barrier bags

Applications

- LCD backlighting
- Push button backlighting
- Front panel indicator
- Symbol indicator
- Microdisplays
- Small message panel signage

CAUTION: *HSMA-Cxxx, HSMC-Cxxx, HSML-Cxxx and HSMZ-Cxxx LEDs are Class 1A ESD sensitive per JESD22-A114C.01. Please observe appropriate precautions during handling and processing. Refer to Application Note AN-1142 for additional details.*

chanhvinh.com

Package Dimensions

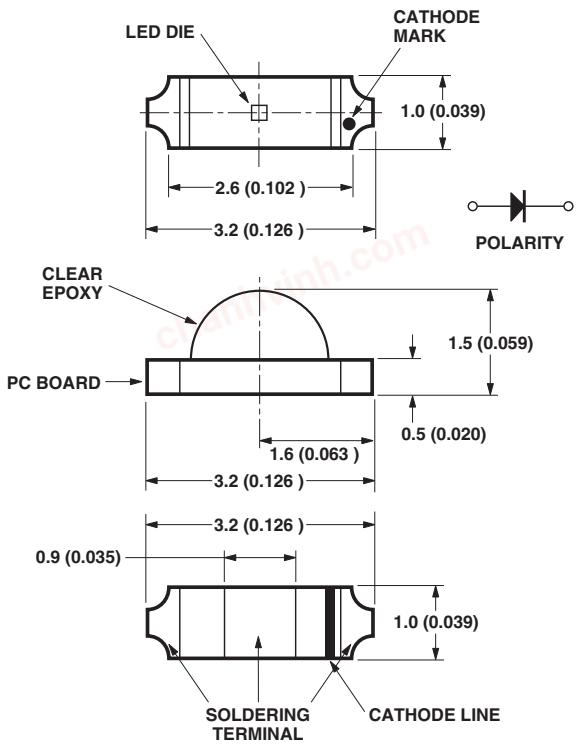

HSMx-C110

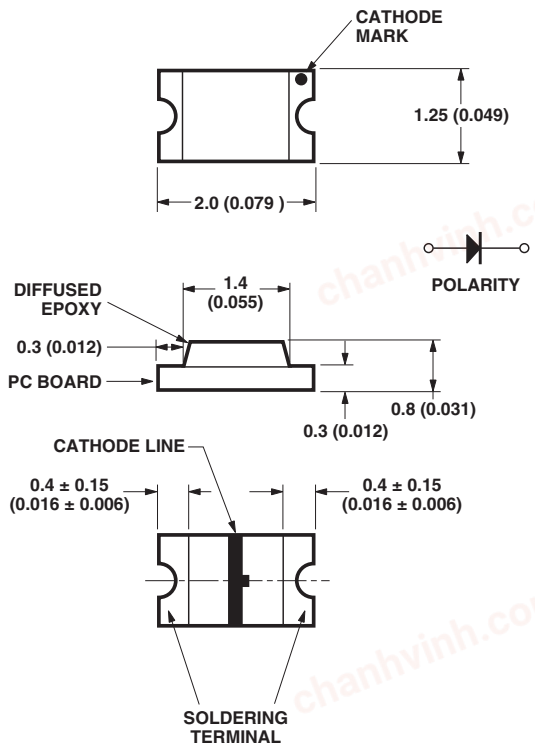

HSMx-C170

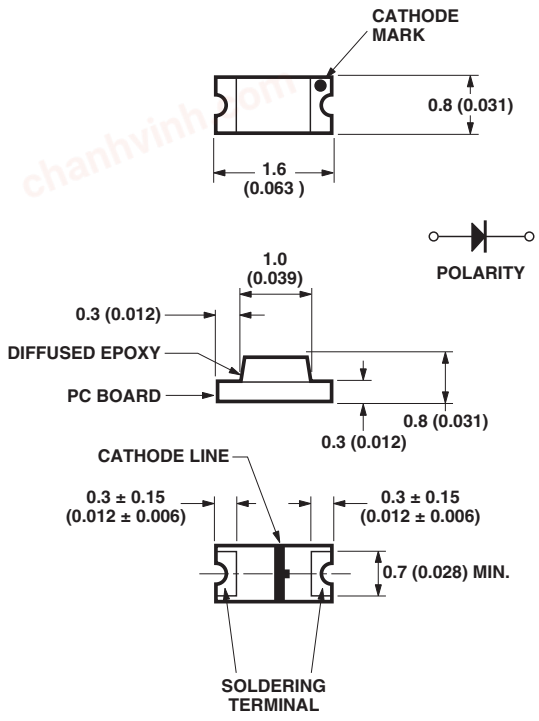

HSMx-C190

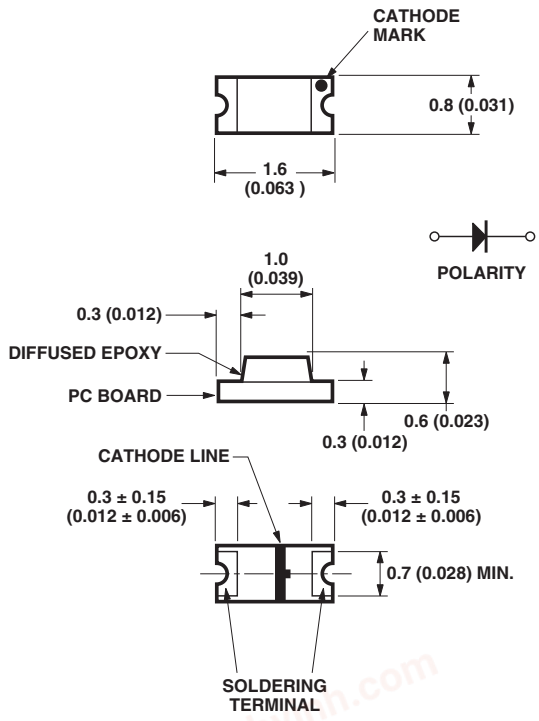

HSMx-C191

NOTES:
1. ALL DIMENSIONS IN MILLIMETERS (INCHES).
2. TOLERANCE IS ± 0.1 mm (± 0.004 IN.) UNLESS OTHERWISE SPECIFIED

chanhvinh.com

Package Dimensions, continued

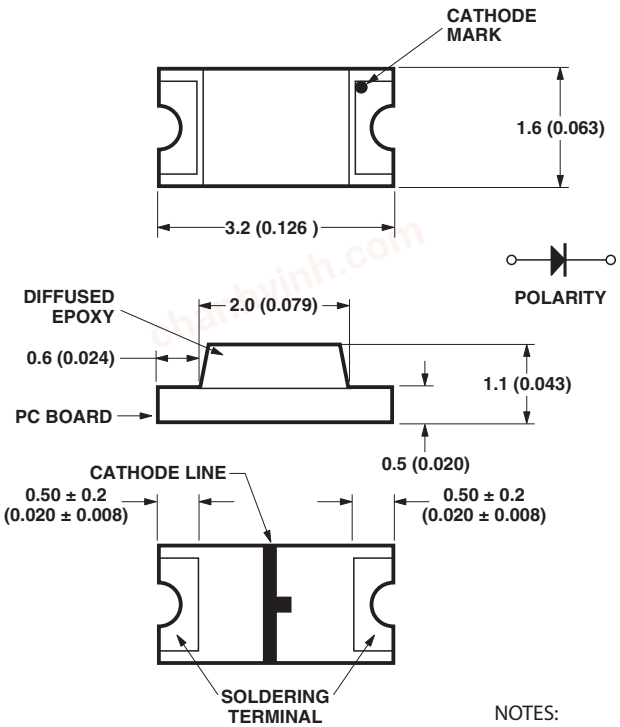

HSMx-C150

NOTES:
1. ALL DIMENSIONS IN MILLIMETERS (INCHES).
2. TOLERANCE IS ± 0.1 mm (± 0.004 IN.) UNLESS OTHERWISE SPECIFIED

Device Selection Guide

Footprint (mm)[1,2]	AS AlInGaP Amber	AS AlInGaP Orange	AS AlInGaP Red	AS AlInGaP Red	Package Description
1.6 x 0.8 x 0.8	HSMA-C190	HSML-C190	HSMC-C190	HSMZ-C190	Untinted, Diffused
2.0 x 1.25 x 0.8	HSMA-C170	HSML-C170	HSMC-C170	HSMZ-C170	Untinted, Diffused
3.2 x 1.5 x 1.0	HSMA-C110	HSML-C110	HSMC-C110	HSMZ-C110	Untinted, Non-diffused
1.6 x 0.8 x 0.6	HSMA-C191	HSML-C191	HSMC-C191		Untinted, Diffused
3.2 x 1.6 x 1.1	HSMA-C150	HSML-C150	HSMC-C150		Untinted, Diffused

Notes:
1. Dimensions in mm.
2. Tolerance ± 0.1 mm unless otherwise noted.

Absolute Maximum Ratings

T_A = 25°C

Parameter	HSMx-C1xx	Units
DC Forward Current[1,2]	25	mA
Power Dissipation	60	mW
Reverse Voltage (I_R = 100 µA)	5	V
LED Junction Temperature	95	°C
Operating Temperature Range	–40 to +85	°C
Storage Temperature Range	–40 to +85	°C
Soldering Temperature	See reflow soldering profile (Figure 7 & 8)	

Notes:
1. Derate linearly as shown in Figure 4.
2. Drive currents above 5 mA are recommended for best long term performance.

chanhvinh.com

Electrical Characteristics

$T_A = 25°C$

Parameter Number	Forward Voltage V_F (Volts) @ $I_F = 20$ mA Typ.	Max.	Reverse Breakdown V_R (Volts) @ $I_R = 100$ µA Min.	Capacitance C (pF), $V_F = 0$, f = 1 MHz Typ.	Thermal Resistance $R\theta_{J\text{-}PIN}$ = (°C/W) Typ.
HSMA-C110	1.9	2.4	5	45	600
HSML-C110	1.9	2.4	5	45	600
HSMC-C110	1.9	2.4	5	45	600
HSMZ-C110	2.2	2.8	5	35	600
HSMA-C170/190/191/150	1.9	2.4	5	45	300
HSML-C170/190/191/150	1.9	2.4	5	45	300
HSMC-C170/190/191/150	1.9	2.4	5	45	300
HSMZ-C170/190	2.2	2.6	5	35	300

Optical Characteristics

$T_A = 25°C$

Part Number	Color	Luminous Intensity I_v (mcd) @ 20 mA[1] Min.	Typ.	Peak Wavelength λ_{peak} (nm) Typ.	Color, Dominant Wavelength λ_d[2] (nm) Typ.	Viewing Angle 2 $\theta_{1/2}$ Degrees[3] Typ.	Luminous Efficacy η_v (lm/w) Typ.
HSMA-C110	AS Amber	28.5	95	595	592	130	480
HSMA-C170/190/191/150	AS Amber	28.5	90	595	592	170	480
HSML-C110	AS Orange	28.5	95	609	605	130	370
HSML-C170/190/191/150	AS Orange	28.5	90	609	605	170	370
HSMC-C110	AS Red	28.5	95	637	626	130	155
HSMC-C170/190/191/150	AS Red	28.5	90	637	626	170	155
HSMZ-C110	AS Red	45	170	643	631	130	122
HSMZ-C170/190	AS Red	45	165	643	631	170	122

Notes:

1. The luminous intensity, I_v, is measured at the peak of the spatial radiation pattern which may not be aligned with the mechanical axis of the lamp package.
2. The dominant wavelength, λ_d, is derived from the CIE Chromaticity Diagram and represents the perceived color of the device.
3. $\theta_{1/2}$ is the off-axis angle where the luminous intensity is 1/2 the peak intensity.

chanhvinh.com

Color Bin Limits[1]

	Orange Color Bins[1]	
	Dom. Wavelength (nm)	
Bin ID	Min.	Max.
A	597.0	600.0
B	600.0	603.0
C	603.0	606.0
D	606.0	609.0
E	609.0	612.0
F	612.0	615.0

Tolerance: ± 1 nm.

	Amber Color Bins[1]	
	Dom. Wavelength (nm)	
Bin ID	Min.	Max.
A	582.0	584.5
B	584.5	587.0
C	587.0	589.5
D	589.5	592.0
E	592.0	594.5
F	594.5	597.0

Tolerance: ± 1 nm.

	Red Color Bins [1]	
	Dom. Wavelength (nm)	
Bin ID	Min.	Max.
-	620.0	635.0

Tolerance: ±1 nm

Note:
1. Bin categories are established for classification of products. Products may not be available in all categories. Please contact your Avago representative for information on currently available bins.

Light Intensity (Iv) Bin Limits[1]

	Intensity (mcd)			Intensity (mcd)	
Bin ID	Min.	Max.	Bin ID	Min.	Max.
A	0.11	0.18	N	28.50	45.00
B	0.18	0.29	P	45.00	71.50
C	0.29	0.45	Q	71.50	112.50
D	0.45	0.72	R	112.50	180.00
E	0.72	1.10	S	180.00	285.00
F	1.10	1.80	T	285.00	450.00
G	1.80	2.80	U	450.00	715.00
H	2.80	4.50	V	715.00	1125.00
J	4.50	7.20	W	1125.00	1800.00
K	7.20	11.20	X	1800.00	2850.00
L	11.20	18.00	Y	2850.00	4500.00
M	18.00	28.50			

Tolerance: ± 15%.

Notes:
1. Bin categories are established for classification of products. Products may not be available in all categories. Please contact your Avago representative for information on currently available bins.
2. The Iv binning specification set-up is for lowest allowable Iv binning only. There are no upper Iv bin limits.

chanhvinh.com

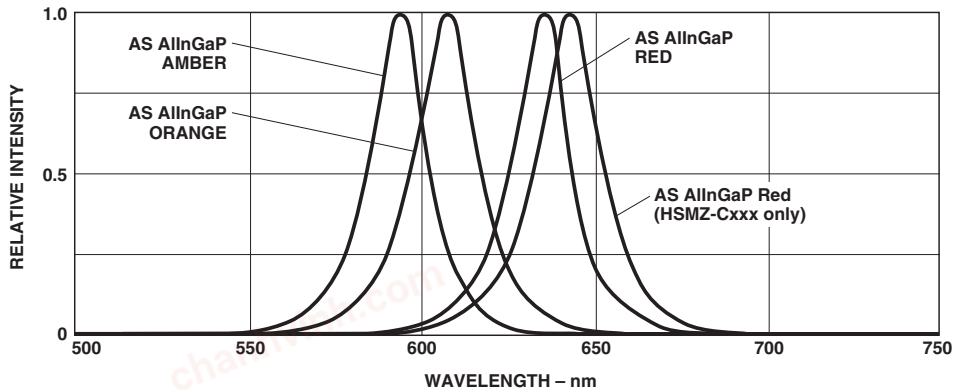

Figure 1. Relative intensity vs. wavelength.

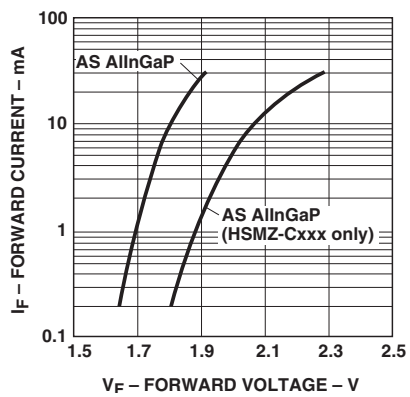

Figure 2. Forward current vs. forward voltage.

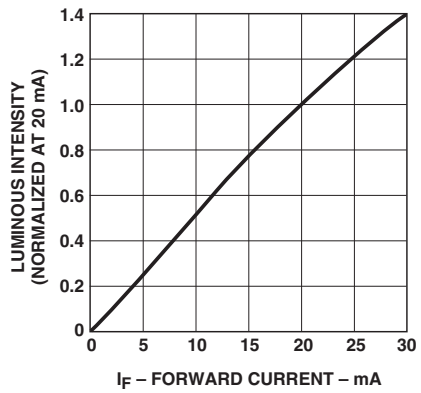

Figure 3. Luminous intensity vs. forward current.

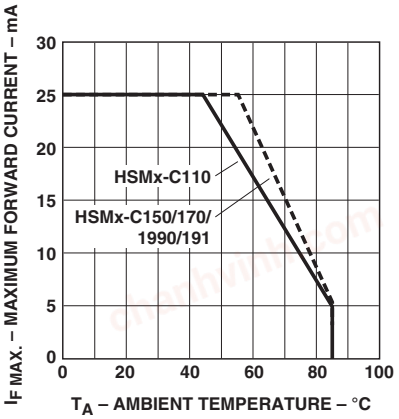

Figure 4. Maximum forward current vs. ambient temperature.

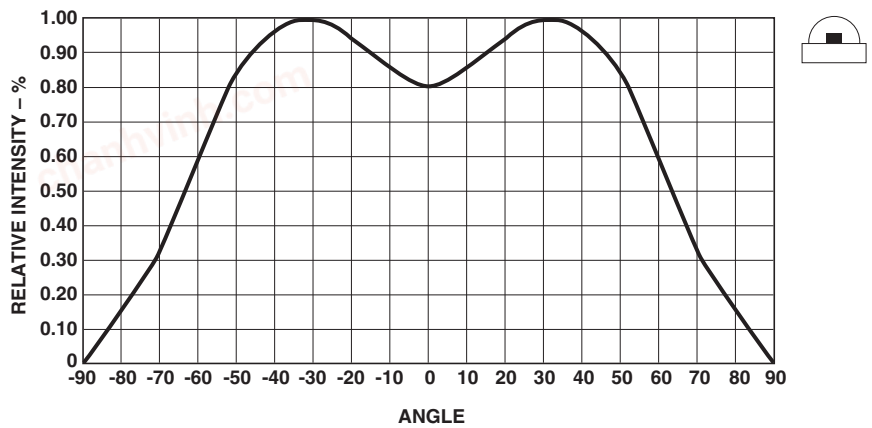

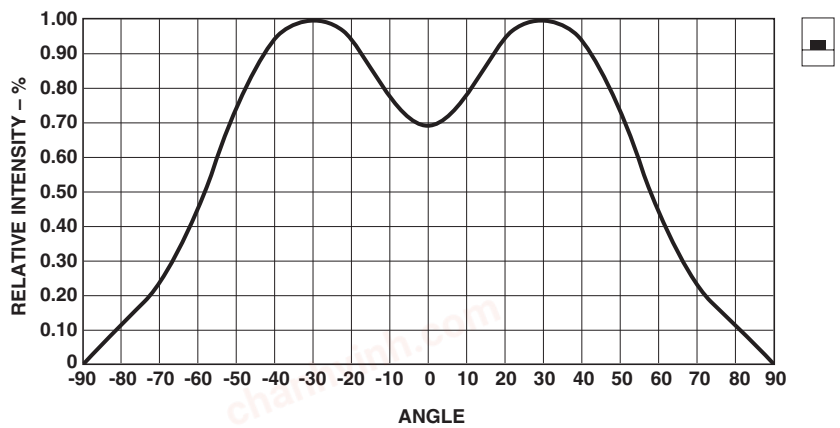

Figure 5. Relative intensity vs. angle for HSMx-C110.

chanhvinh.com

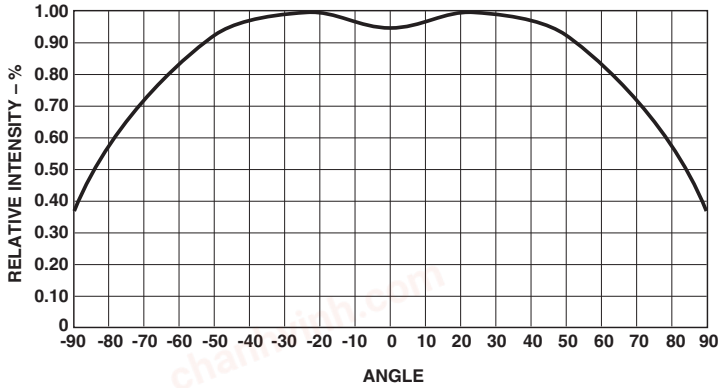

Figure 6. Relative intensity vs. angle for HSMx-C170, C190, C191, and C150.

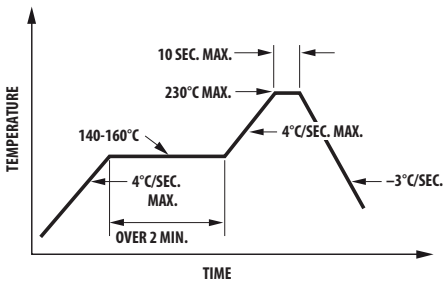

Figure 7. Recommended reflow soldering profile.

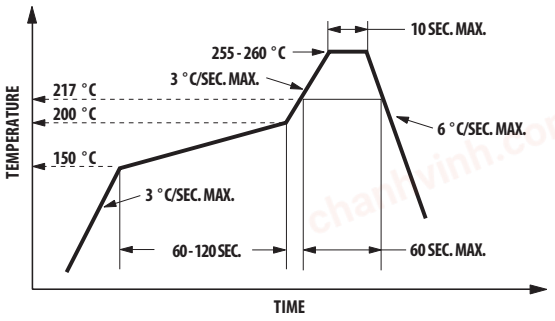

Figure 8. Recommended Pb-free reflow soldering profile.

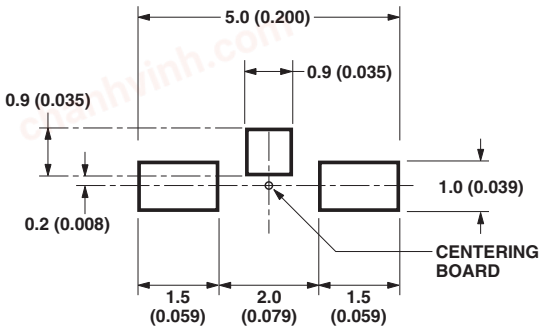

Figure 9. Recommended soldering pattern for HSMx-C110.

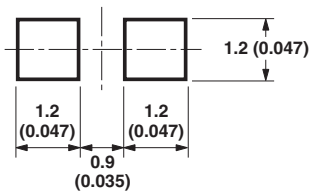

Figure 10. Recommended soldering pattern for HSMx-C170.

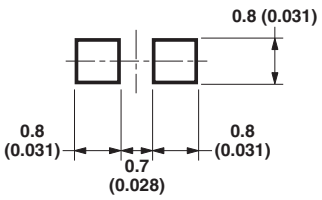

Figure 11. Recommended soldering pattern for HSMx-C190 and C191.

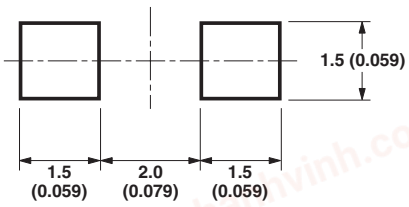

Figure 12. Recommended soldering pattern for HSMx-C150.

Note: All dimensions in millimeters (inches).

chanhvinh.com

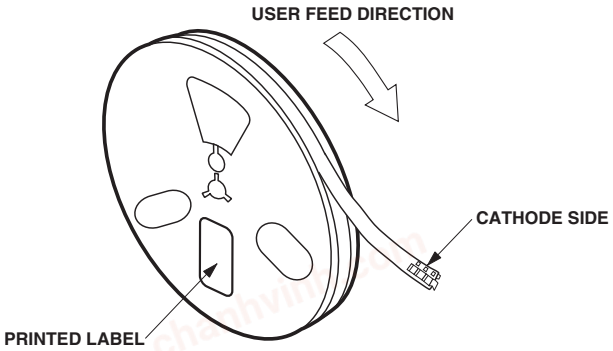

Figure 13. Reeling orientation.

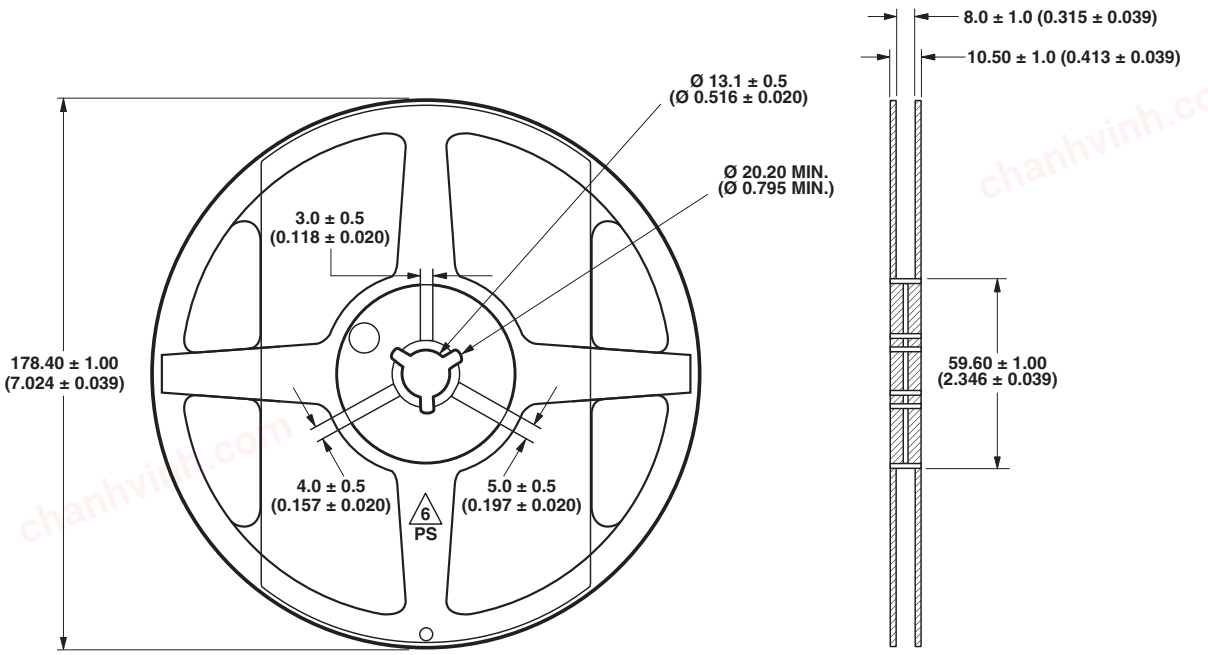

Figure 14. Reel dimensions.

Note: All dimensions in millimeters (inches).

chanhvinh.com

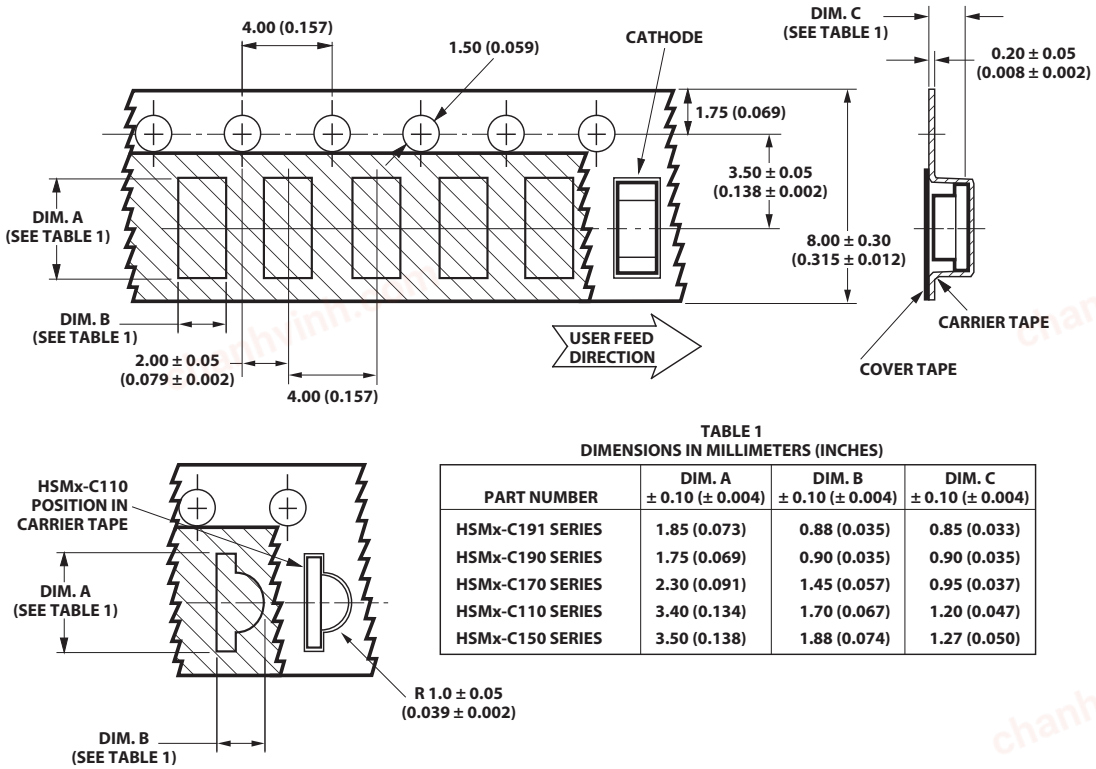

TABLE 1
DIMENSIONS IN MILLIMETERS (INCHES)

PART NUMBER	DIM. A ± 0.10 (± 0.004)	DIM. B ± 0.10 (± 0.004)	DIM. C ± 0.10 (± 0.004)
HSMx-C191 SERIES	1.85 (0.073)	0.88 (0.035)	0.85 (0.033)
HSMx-C190 SERIES	1.75 (0.069)	0.90 (0.035)	0.90 (0.035)
HSMx-C170 SERIES	2.30 (0.091)	1.45 (0.057)	0.95 (0.037)
HSMx-C110 SERIES	3.40 (0.134)	1.70 (0.067)	1.20 (0.047)
HSMx-C150 SERIES	3.50 (0.138)	1.88 (0.074)	1.27 (0.050)

Figure 15. Tape dimensions.

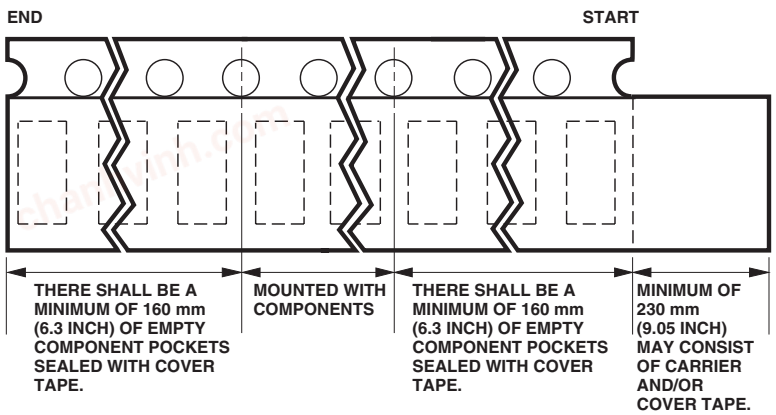

Figure 16. Tape leader and trailer dimensions.

NOTES:
1. ALL DIMENSIONS IN MILLIMETERS (INCHES).
2. TOLERANCE IS ± 0.1 mm (± 0.004 IN.) UNLESS OTHERWISE SPECIFIED.

Convective IR Reflow Soldering

For more information on IR reflow soldering, refer to Application Note 1060, *Surface Mounting SMT LED Indicator Components.*

Storage Condition: 5 to 30˚C @ 60% RH max.

Baking is required under the condition:

a) Humidity Indicator Card is >10% when read at 23±5°C.
b) Device exposed to factory conditions <30°C/60% RH more than 672 hours.

Baking recommended condition: 60 +/– 5˚C for 20 hours.

For product information and a complete list of distributors, please go to our website: **www.avagotech.com**

Avago, Avago Technologies, and the A logo are trademarks of Avago Technologies in the United States and other countries.
Data subject to change. Copyright © 2005-2010 Avago Technologies. All rights reserved. Obsoletes 5989-3604EN
AV02-0112EN - September 29, 2010