chanhvinh.com

HSDL - 9100
Surface-Mount Proximity Sensor

Data Sheet



Description

The HSDL-9100 is an analog-output reflective sensor with an integrated high efficiency infrared emitter and photodiode housed in a small form factor SMD package. The optical proximity sensor is housed in a specially designed metal-shield to ensure excellent optical isolation resulting in low optical cross-talk.

HSDL-9100 has an option for 2.7 or 2.4mm height parts with its small form SMD package and at a detection range from near zero to 60mm. It is specifically optimized for size, performance and ease of design in mobile constrained applications such as mobile phones and notebooks.

HSDL-9100 has extremely low dark current and high signal to noise ratio (SNR) where high SNR is achieved with a pair of highly efficient infrared emitter and highly sensitive detector.

Application Support Information

The Application Engineering Group is available to assist you with the application design associated with HSDL-9100 Proximity Sensor. You can contact them through your local sales representatives for additional details.

Features

- Excellent optical isolation resulting in near zero optical cross-talk
- High efficiency emitter and high sensitivity photodiode for high signal-to-noise ratio
- Low cost & lead-free miniature surface-mount package
  Height – 2.40 or 2.70 mm
  Width – 2.75 mm
  Length – 7.10 mm
- Can be paired up with signal conditioning IC (APDS-9700)
- Detect objects from near zero to 60mm
- Low dark current
- Guaranteed Temperature Performance -40°C to 85°C
- Lead-free and RoHS Compliant

Applications

- Mobile phones
- Notebooks
- Industrial Control
- Printers, Photocopiers and Facsimile machines
- Home Appliances
- Vending Machines

Order Information

Part Number	Description	Packaging Type	Package	Quantity
HSDL-9100-021	2.7mm Height	Tape & Reel	SMD	2500
HSDL-9100-024	2.4mm Height	Tape & Reel	SMD	2500

chanhvinh.com

Block Layout

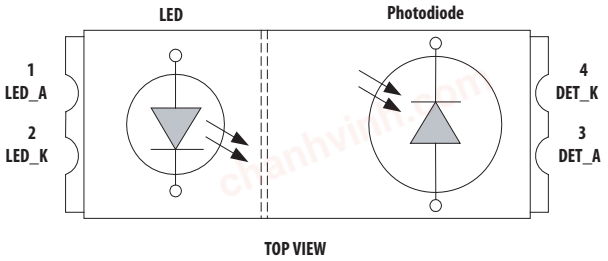

Figure 1. Block Layout of HSDL-9100

Pins Configuration Table

Pin	Symbol	Description	Notes
1	LED_A	LED Anode	1
2	LED_K	LED Cathode	-
3	DET_A	Photodiode Anode	-
4	DET_K	Photodiode Cathode	-

Notes:
Voltage to supply across the LED; VLED

Absolute Maximum Ratings (Ta=25°C)

Parameter	Symbol	Ratings		Units
		Min.	Max	
Emitter				
Continuous Forward Current	I_{DC}	-	100	mA
Coupled				
Total Power Dissipation (refer to Figure 1)	P_{TOT}	-	165	mW
Operating Temperature	T_{OP}	-40	+85	°C
Storage Temperature	T_{STG}	-40	+100	°C
Reflow Soldering Temperature	T_{SOL}	-	260	°C

Electrical-Optical Characteristics (Ta=25°C)

Parameter	Symbol	Test Condition	Ratings			Units
			Min	Typ	Max	
Emitter						
Forward Voltage	V_F	I_F = 100mA	-	1.50	1.65	V
Reverse Voltage	V_R	I_R = 10µA	5	-	-	V
Peak Wavelength	I_p	I_F = 20mA	-	940	-	nm
Spectrum Width of Half Value	D_p	I_F = 20mA	-	50	-	nm
Detector						
Dark Current	I_{Dark}	V_R = 10V, L** = 0	-	2	10	nA
Forward Voltage	V_F	I_F = 10mA , L=0	0.5	-	1.3	V
Reverse Breakdown Voltage	V_{BR}	I_R = 100uA, L = 0	-	-	35	V
Coupled						
Output Current	I_O	Refer to Fig 2	-	10	-	µA
Peak Output Distance	D_O	Refer Note 1	-	5	-	mm
Operating Cross Talk Current	I_{FD}	Refer to Fig 3	-	-	200	nA
Rise Time (LED)	T_{RL}	R_L = 50Ω	-	50	-	ns
Fall Time (LED)	T_{FL}	R_L = 50Ω	-	50	-	ns
Rise Time (Photodiode)	T_{RD}	R_L = 5.1KΩ	-	6	-	µs
Fall Time (Photodiode)	T_{FD}	R_L = 5.1KΩ	-	6	-	µs

** L = 0 (zero light condition)

Note:
1. I_{Led} = 300mA Pulse, 5% Duty Cycle (Kodak 18% Reflectance Gray Card)

chanhvinh.com

Output Current Test Condition (Ta=25°C)

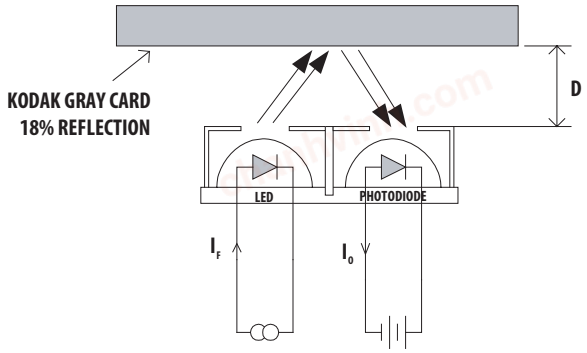

Figure 2.

Test Condition used are D = 5mm 18% Gray Card,
I_{LED} = 300mA Pulse, 5% Duty Cycle

Dark Current Test Condition (Ta=25°C)

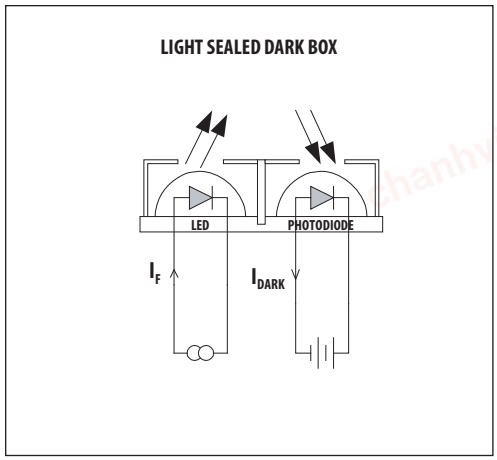

Figure 3.

Test Condition used are I_{LED} = 300mA Pulse, 5% Duty Cycle

Response Time Test Condition (Ta=25°C)

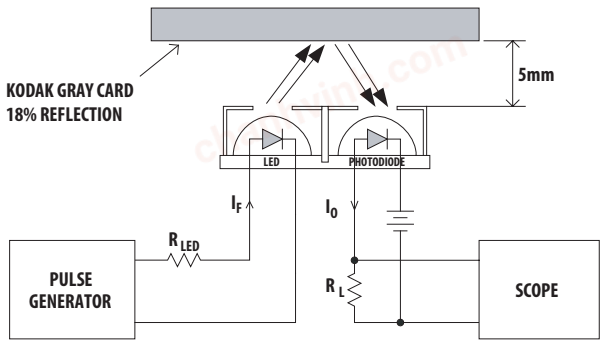

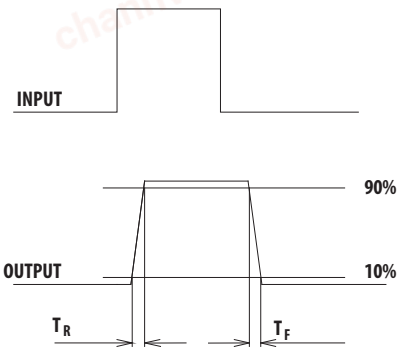

Figure 4. Response Time Test Condition

Typical Radiation Profile for HSDL-9100

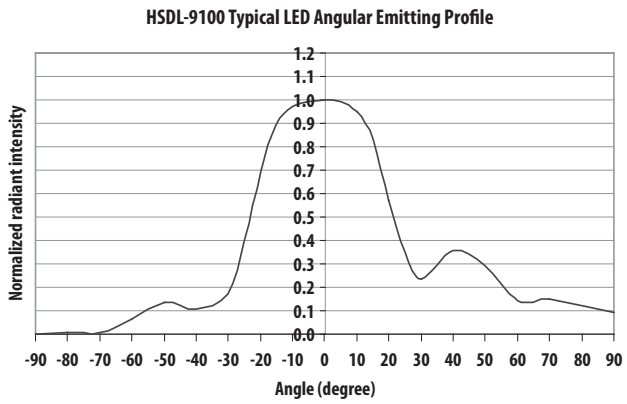

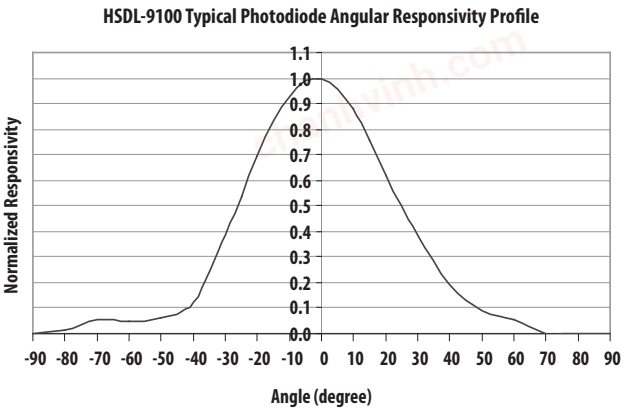

chanhvinh.com

Typical Characteristics

LED Forward Current Vs Temperature

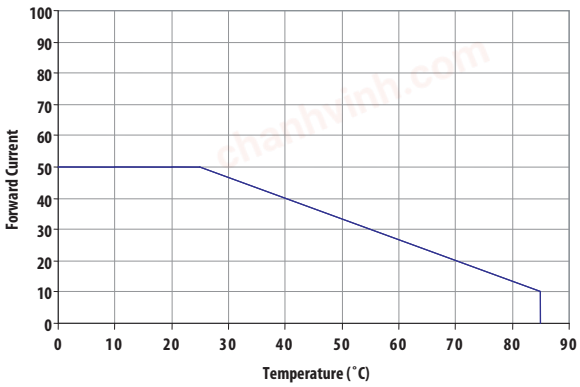

Power Dissipation Vs Temperature

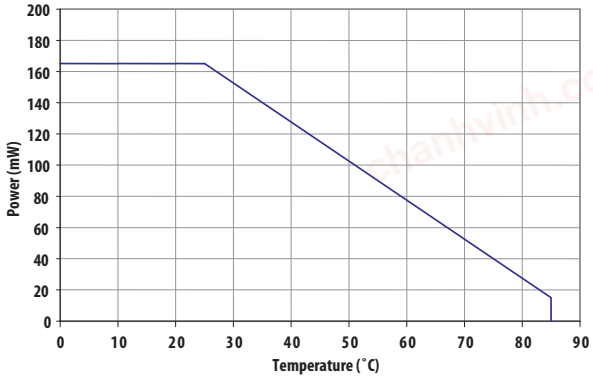

LED Forward Current Vs Forward Voltage @ Across Temperature

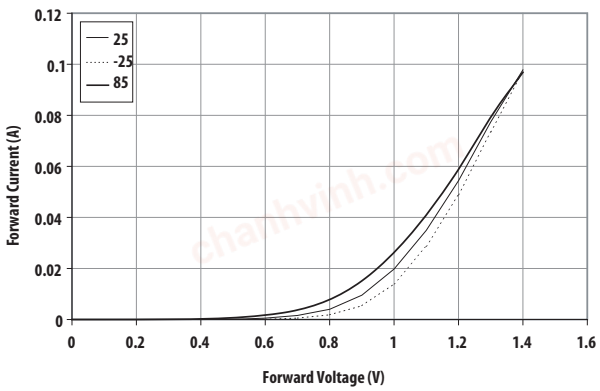

(Photodiode) Forward Current Vs Forward Voltage@Across Temp

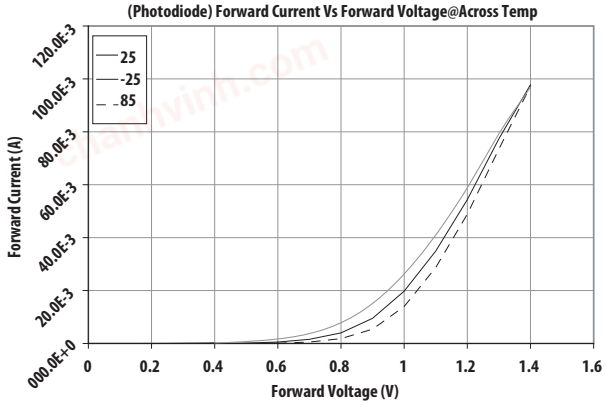

Forward Current (A) Vs Temperature (degC) @Vcc=1V and 1.3V

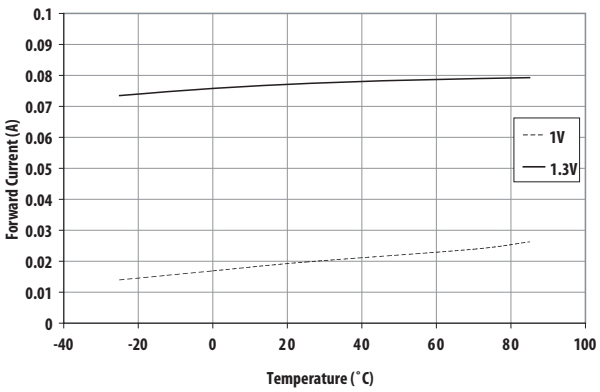

(Photodiode) Rise/Fall Time Vs Load Resistance@Room Temp, ILED=300mA Pulse

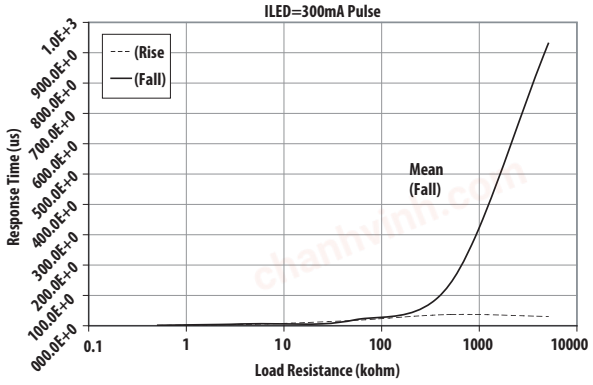

chanhvinh.com

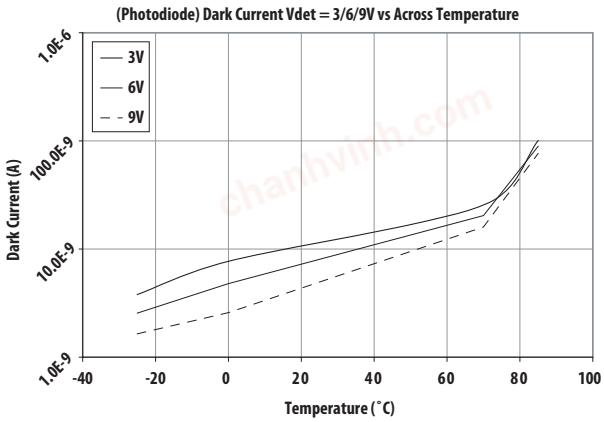

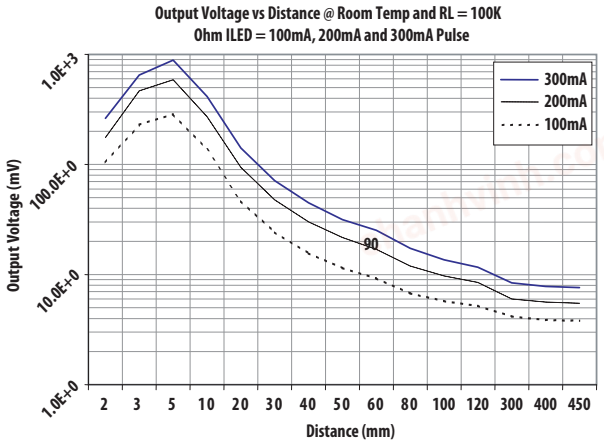

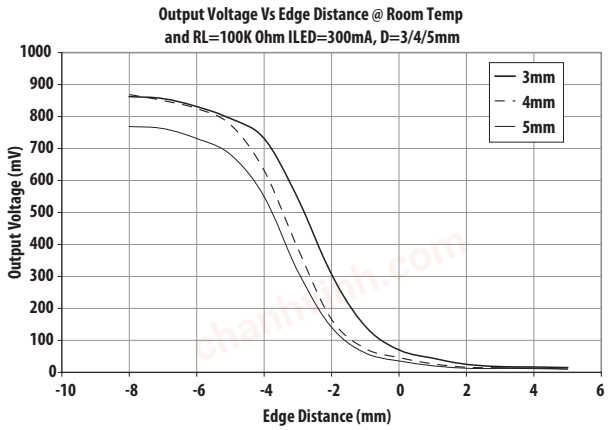

The diagram below illustrates the explanation of edge distance. Edge detection is labeled as D in the diagram below.

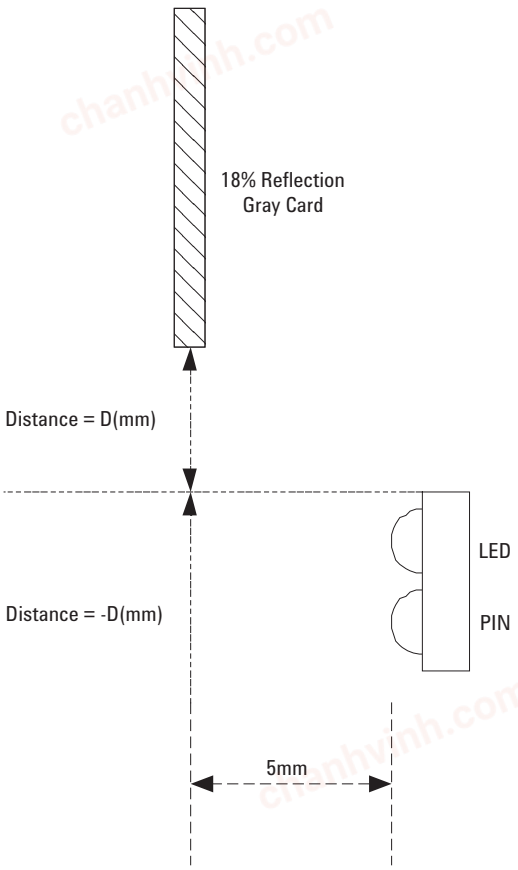

chanhvinh.com

HSDL-9100 Package Outlines

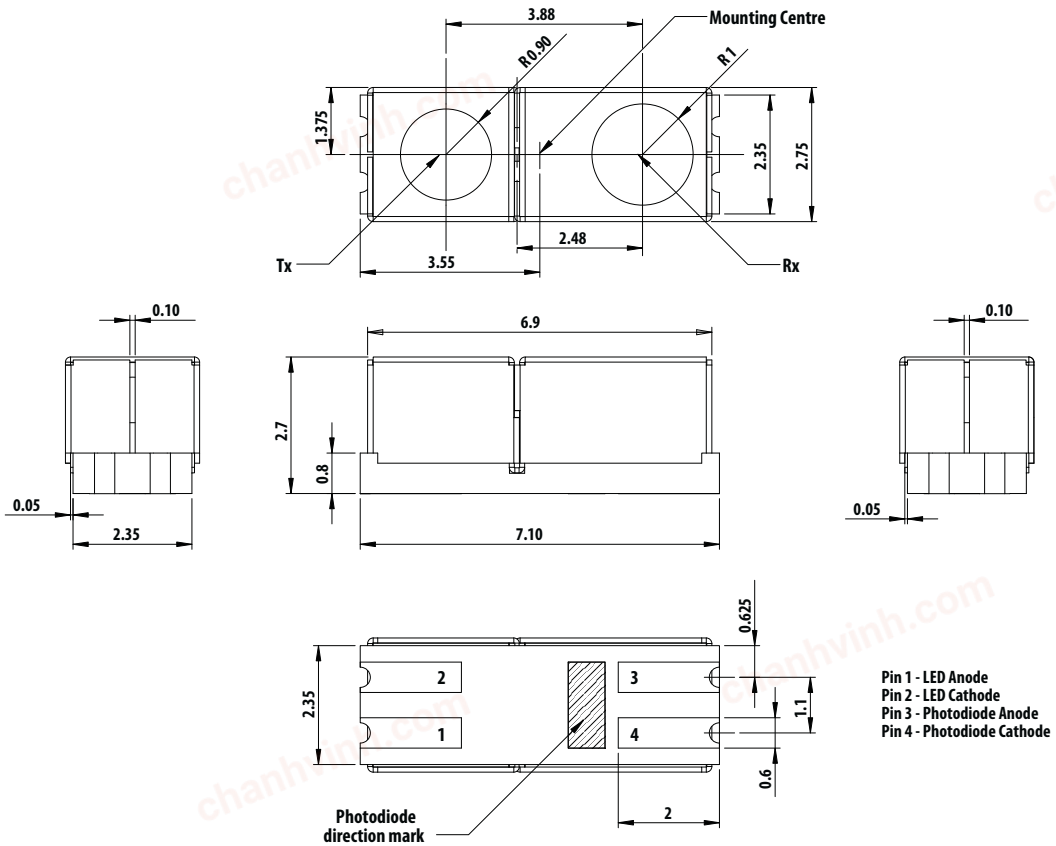

Figure 5a. HSDL-9100-021 Package dimensions

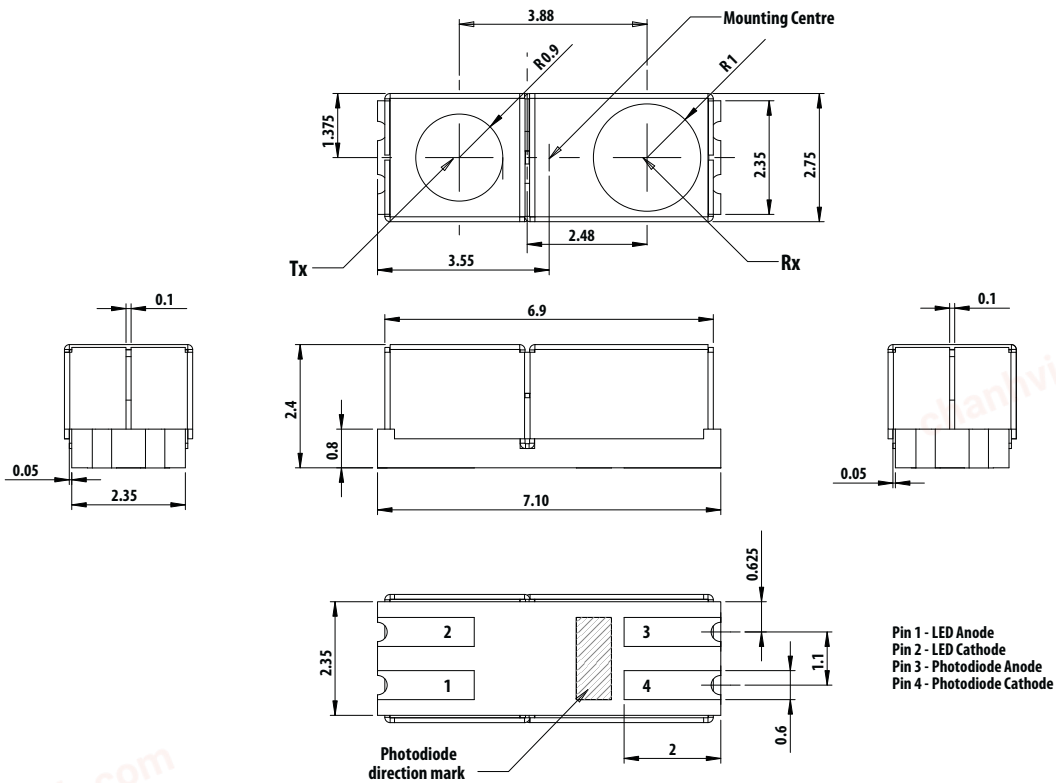

Figure 5b. HSDL-9100-024 Package dimensions

chanhvinh.com

HSDL-9100-021/024 Tape and Reel Dimensions

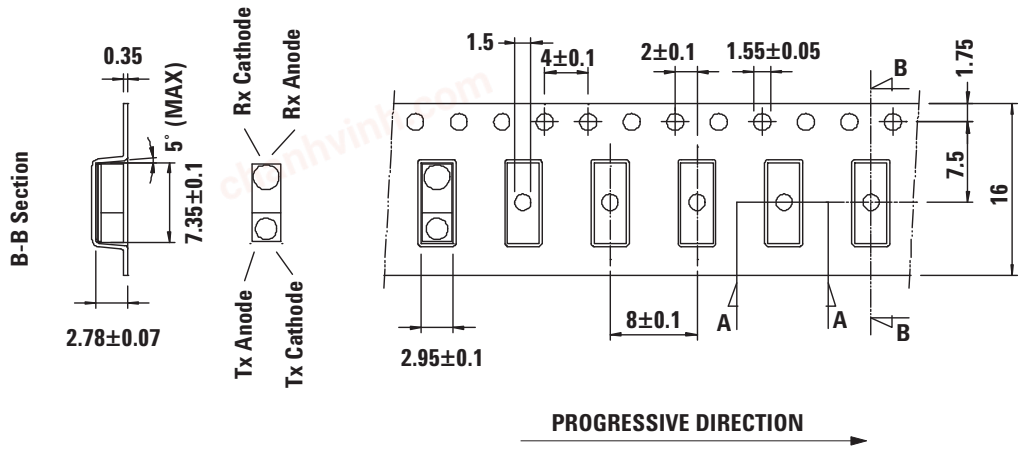

UNIT: MM

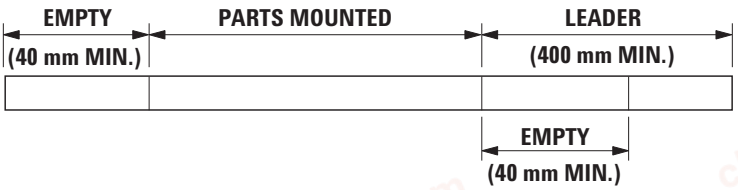

OPTION #	"B"	"C"	QUANTITY
001	178	60	500
021	330	80	2500

UNIT: mm

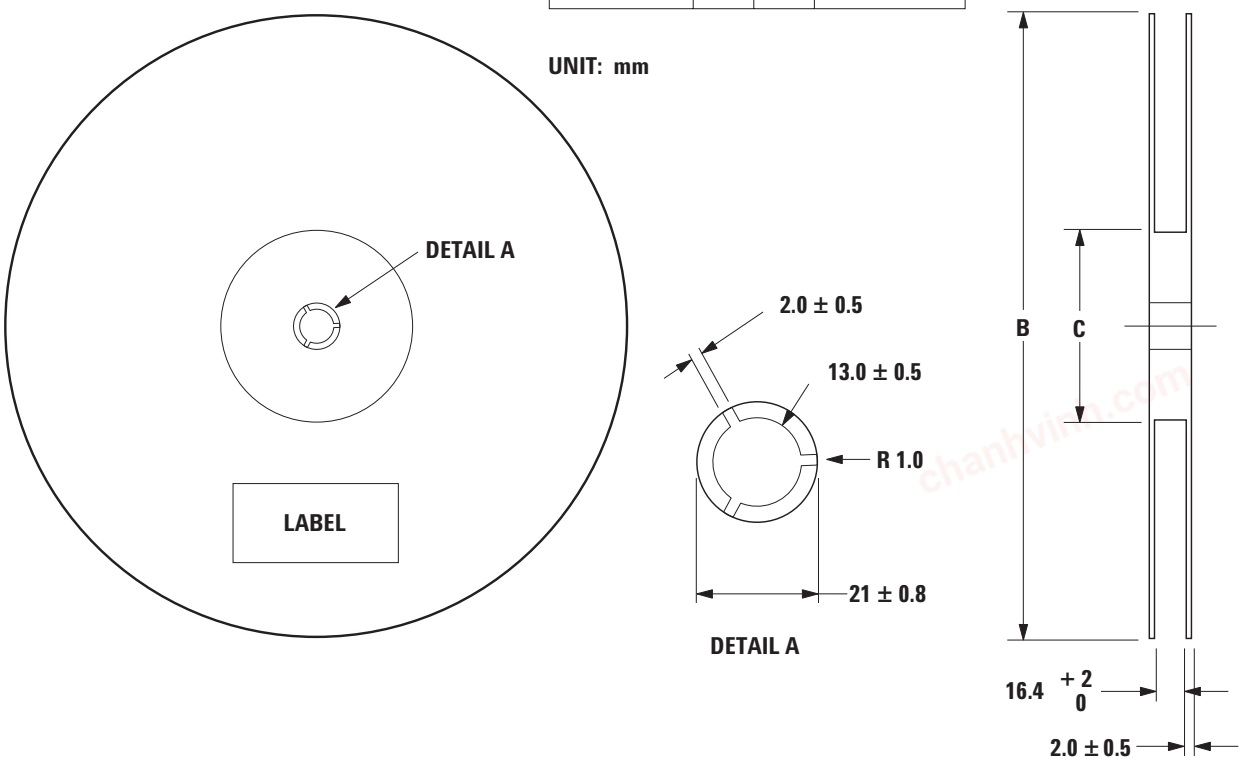

Figure 6. Tape and Reel Dimensions

chanhvinh.com

HSDL-9100 Moisture Proof Packaging

All HSDL-9100 options are shipped in moisture proof package. Once opened, moisture absorption begins.

This part is compliant to JEDEC Level 3.

Baking Conditions

If the parts are not stored in dry conditions, they must be baked before reflow to prevent damage to the parts.

Package	Temp	Time
In reels	60 °C	≥ 48hours
In bulk	100 °C	≥ 4hours
	125 °C	≥ 2 hours

Baking should only be done once.

Recommended Storage Conditions

Storage Temperature	10°C to 30°C
Relative Humidity	below 60% RH

Time from unsealing to soldering

After removal from the bag, the parts should be soldered within seven days if stored at the recommended storage conditions.

Baking Conditions Chart

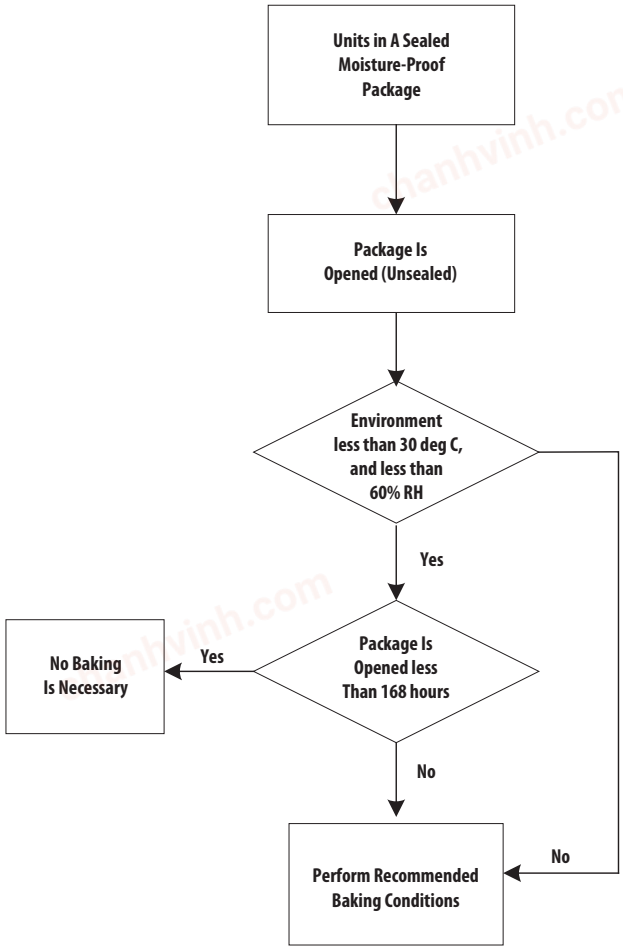

Figure 7. Baking conditions chart

chanhvinh.com

Recommended Reflow Profile

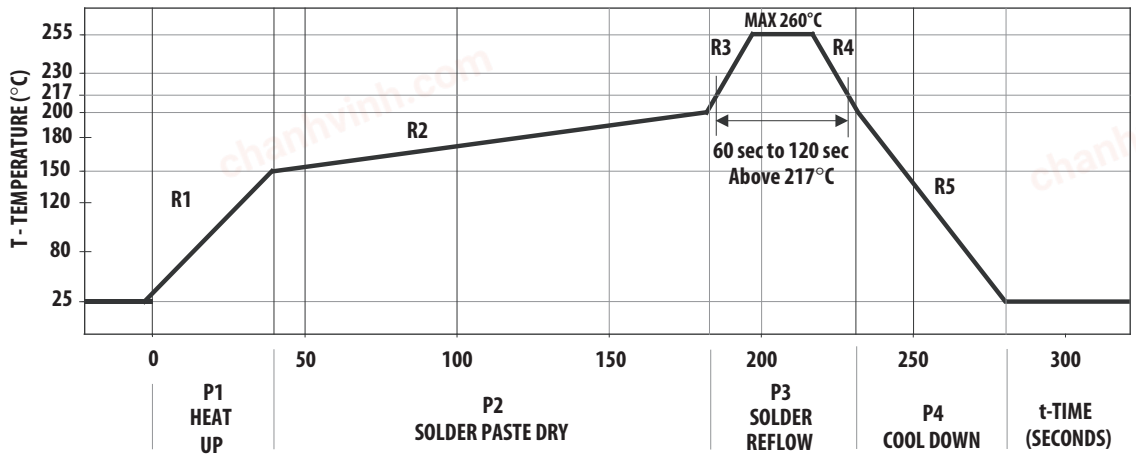

Process Zone	Symbol	ΔT	Maximum ΔT/Δtime or Duration
Heat Up	P1, R1	25°C to 150°C	3°C/s
Solder Paste Dry	P2, R2	150°C to 200°C	100s to 180s
Solder Reflow	P3, R3 P3, R4	200°C to 260°C 260°C to 200°C	3°C/s -6°C/s
Cool Down	P4, R5	200°C to 25°C	-6°C/s
Time maintained above liquidus point , 217°C		> 217°C	60s to 120s
Peak Temperature		260°C	-
Time within 5°C of actual Peak Temperature		> 255°C	20s to 40s
Time 25°C to Peak Temperature		25°C to 260°C	8mins

The reflow profile is a straight-line representation of a nominal temperature profile for a convective reflow solder process. The temperature profile is divided into four process zones, each with different ΔT/Δtime temperature change rates or duration. The ΔT/Δtime rates or duration are detailed in the above table. The temperatures are measured at the component to printed circuit board connections.

In process zone P1, the PC board and component pins are heated to a temperature of 150°C to activate the flux in the solder paste. The temperature ramp up rate, R1, is limited to 3°C per second to allow for even heating of both the PC board and component pins.

Process zone P2 should be of sufficient time duration (100 to 180 seconds) to dry the solder paste. The temperature is raised to a level just below the liquidus point of the solder.

Process zone P3 is the solder reflow zone. In zone P3, the temperature is quickly raised above the liquidus point of solder to 260°C (500°F) for optimum results. The dwell time above the liquidus point of solder should be between 60 and 120 seconds. This is to assure proper coalescing of the solder paste into liquid solder and the formation of good solder connections. Beyond the recommended dwell time the intermetallic growth within the solder connections becomes excessive, resulting in the formation of weak and unreliable connections. The temperature is then rapidly reduced to a point below the solidus temperature of the solder to allow the solder within the connections to freeze solid.

Process zone P4 is the cool down after solder freeze. The cool down rate, R5, from the liquidus point of the solder to 25°C (77°F) should not exceed 6°C per second maximum. This limitation is necessary to allow the PC board and component pins to change dimensions evenly, putting minimal stresses on the component.

It is recommended to perform reflow soldering no more than twice.

chanhvinh.com

Appendix A: HSDL-9100 SMT Assembly Application Note

Recommended Metal solder Stencil Aperture

It is recommended that only a 0.152 mm (0.006 inch) or a 0.127 mm (0.005 inch) thick stencil be used for solder paste printing. This is to ensure adequate printed solder paste volume and no shorting. See Table 1 below the drawing for combinations of metal stencil aperture and metal stencil thickness that should be used. Aperture opening for shield pad is 3.05 mm x 1.1 mm as per land pattern.

Table 1. Combinations of metal stencil aperture and metal stencil thickness

	Aperture size (mm)	
	Length, l	Width, w
0.152	1.60+/-0.05	0.55+/-0.05
0.127	1.92	0.55+/-0.05

Adjacent Land Keep out and Solder Mask Areas

Adjacent land keep out is the maximum space occupied by the unit relative to the land pattern. There should be no other SMD components within this area. The minimum solder resist strip width required to avoid solder bridging adjacent pads is 0.2mm.It is recommended that two fiducial crosses be placed at mid length of the pads for unit alignment. Also do take note that there should not be any electrical routing with the component placement compartment.

Note:
Wet/Liquid Photo-imaginable solder resist/mask is recommended

Solder Pad, Mask and Metal Stencil

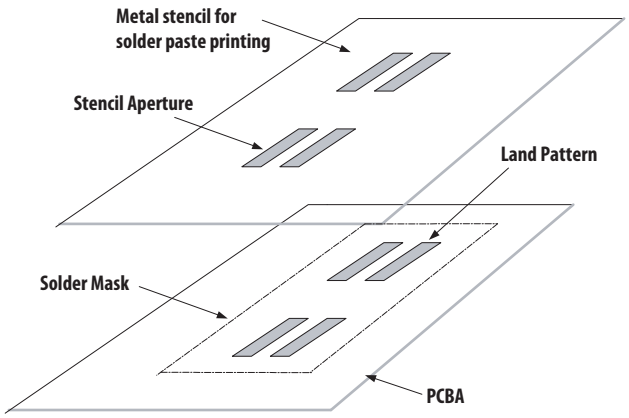

Figure 9. Stencil and PCBA

Recommended land pattern

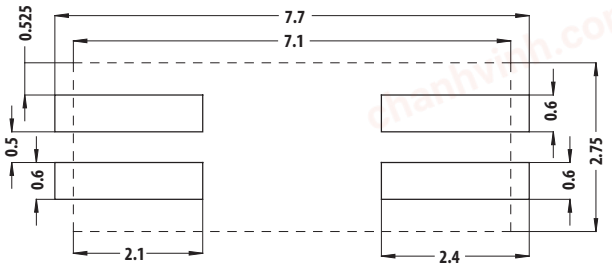

Solder / stencil opening for each pad is 2.4mm x0.6mm

Figure 10. Land Pattern

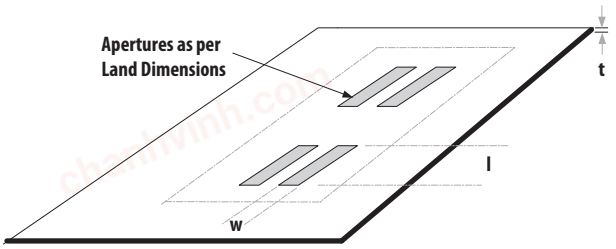

Figure 11. Solder stencil aperture

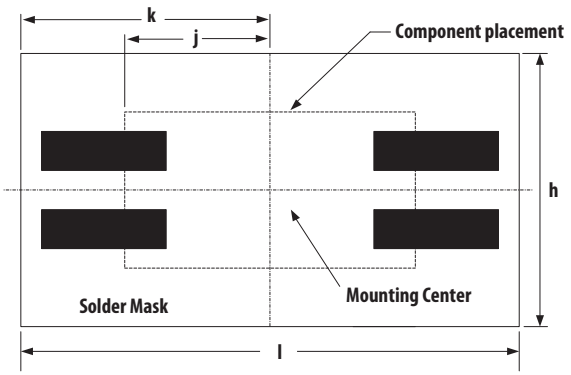

Dim.	mm
h	4.15
l	11
k	5.5
j	3.5

Figure 12. Keep-out area

chanhvinh.com

Appendix B: General Application Guide for the HSDL-9100

Description

The Proximity sensor has several possible applications for multimedia product, Automation, and Personal handled. The proximity sensor is basically made up of the emitter (infrared LED) and detector (photodiode). The block diagram of the sensor is shown in Figure 13. The emitter will emit IR light pulse. This light travels out in the field of view and will either hit an object or continue. No light will be reflected when no object is detected. On the other hand, the detector will detect the reflected IR light when it hits the object.

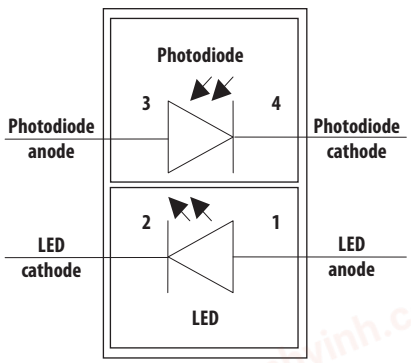

Figure 13. Proximity sensor block diagram (refer to Pins Configuration Table)

Interface to the Recommended I/O chip

The HSDL-9100 is general interface with the GPIO pin of the controller chipset. The LED_A, pin1 is connected to the PWM port alternatively the external timer circuitry can be used to drive the LED. The DET_K, pin 4 is interface to the signal conditioning before driving the GPIO port.

Figure 14 shows the hardware reference design with HSDL-9100.

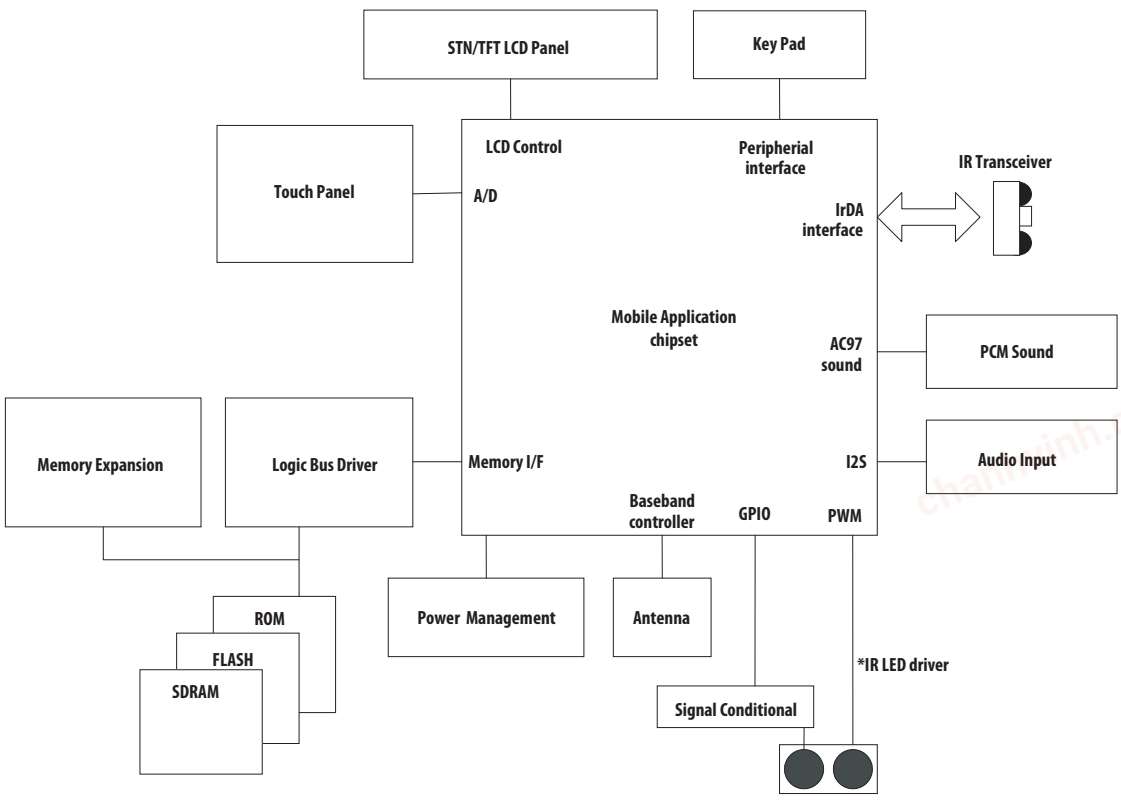

* The LED can be driven by the PWM output or the external timer circuitry.

Figure 14. Mobile Application Platform

chanhvinh.com

The next section discusses interfacing configuration with general processor including the recommended signal conditional circuitry.

The DET_A pin of HSDL-9100 is connected to the filter circuit then to the comparator before interfacing with the GPIO pin. The filter circuit is implement to provide the ambient light filter. The PWM is pulse to drive the LED_K pin alternative the external timer 555 can also be replaced. The detector distance can be varies with the increase/decrease of the LED current supply.

Interfacing circuitry with signal conditional circuitry

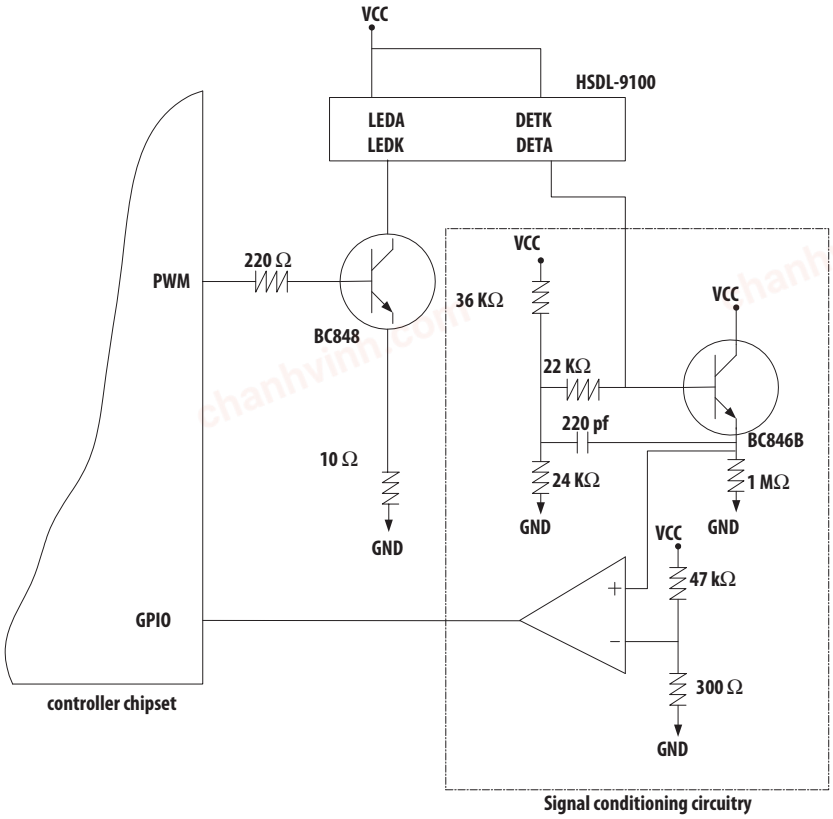

Figure 15. HSDL9100 configuration with controller chipset

chanhvinh.com

Appendix C: Recommended window and light guide for HSDL-9100

Some constraints on the design and position of the window are required so that the cross talk from the emitter to the photodiode is minimized. Four recommendations of window design are suggested as below:

- Put the optical sensor close to the window material. (See option 1)
- Using baffle in between emitter and detector will reduce the crosstalk caused by bottom surface. It is recommended to extend the baffle into the flat window as to reduce the crosstalk caused by top surface too. (See option 2)
- Using opaque material of light pipes with two holes as light path. The structure need to be carefully designed to minimize the signal loss and crosstalk. (See option 3)
- Using separate pieces of light guide bonded together for emitter and photo sensor respectively. Insert a baffle in between the two light guides. (See option 4)

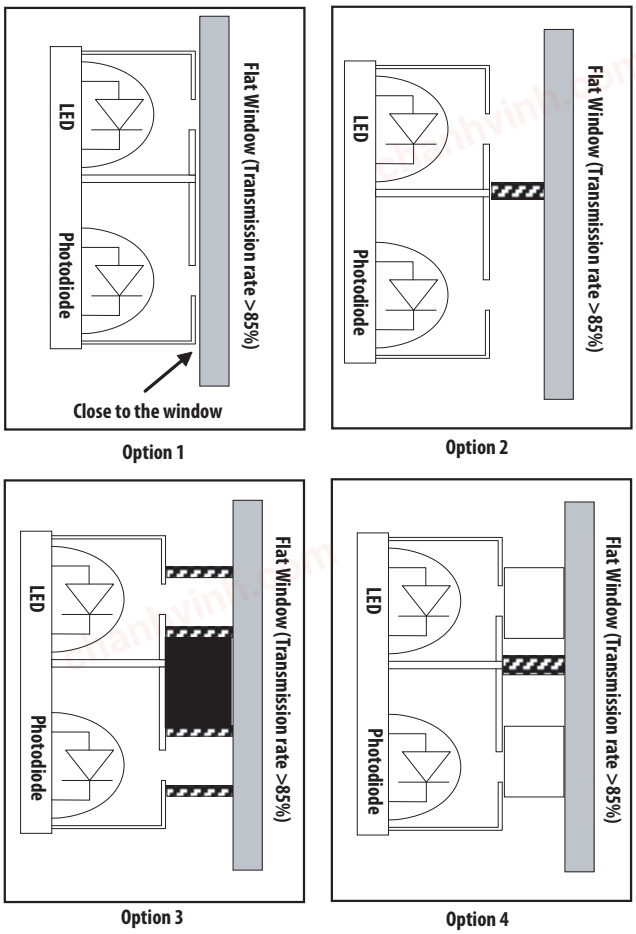

Recommended Window Material

Almost any plastic material will work as a window material. Polycarbonate is recommended. The surface finish of the plastic should be smooth, without any texture. The thickness of the window material is recommended to be less than 0.5mm. An IR filter dye may be used in the window to make it look black to the eye but the total optical loss of the window should be 10% or less for best optical performance. Light loss should be measured at 875nm. The recommended plastic materials for use as a cosmetic window are available for General Electric Plastics.

Recommended Plastic Materials:

Material #	Light Transmission	Haze	Refractive Index
Lexan 141	88%	1%	1.586
Lexan 920A	85%	1%	1.586
Lexan 940A	85%	1%	1.586

Note:
920A and 940A are more flame retardant than 141.
Recommended Dye: Violet #21051 (IR transmissant above 625 nm)

Avago, Avago Technologies, and the A logo are trademarks of Avago Technologies in the United States and other countries.
Data subject to change. Copyright © 2005-2009 Avago Technologies. All rights reserved. Obsoletes AV02-0779EN
AV02-2259EN - November 26, 2009