chanhvinh.com

HLMP-Ex1A/1B-xxxDV (15° minimum), HLMP-Ex3A/3B-xxxDV (30° minimum)

5mm Extra High Brightness AlInGaP LED lamps

Data Sheet

Lead (Pb) Free
RoHS 6 fully compliant

Description

These 5mm Extra High Brightness AlInGaP LEDs provide superior light output for excellent readability in sunlight and are extremely reliable. AlInGaP LED technology provides extremely stable light output over long periods of time. These Extra High Brightness lamps utilize the aluminum indium gallium phosphide (AlInGaP) technology.

These LED lamps are untinted. T-1¾ packages incorporating second generation optics producing well defined spatial radiation patterns at specific viewing cone angles.

These lamps are made with an advanced optical grade epoxy offering superior high temperature and high moisture resistance performance in outdoor signal and sign application. The maximum LED junction temperature limit of +130°C enables high temperature operation in bright sunlight conditions. The epoxy contain both uv-a and uv-b inhibitor to reduce the effects of long term exposure to direct sunlight.

Benefits

- Superior performance for outdoor environment
- Suitable for auto-insertion onto PC board

Features

- Viewing Angle: 15° minimum
  30° minimum
- High luminous Intensity
- Color
  - 590nm Amber
  - 626nm Red
- Package options:
  - With or without standoff
- Superior resistance to moisture
- Untinted for 15° and 30° lamps

Applications

- Traffic management:
  - Traffic signals
  - Pedestrian signals
  - Work zone warning lights
  - Variable message signs
- Solar Power signs
- Commercial outdoor advertising
  - Signs
  - Marquees

chanhvinh.com

Package Dimension

A: Non-standoff

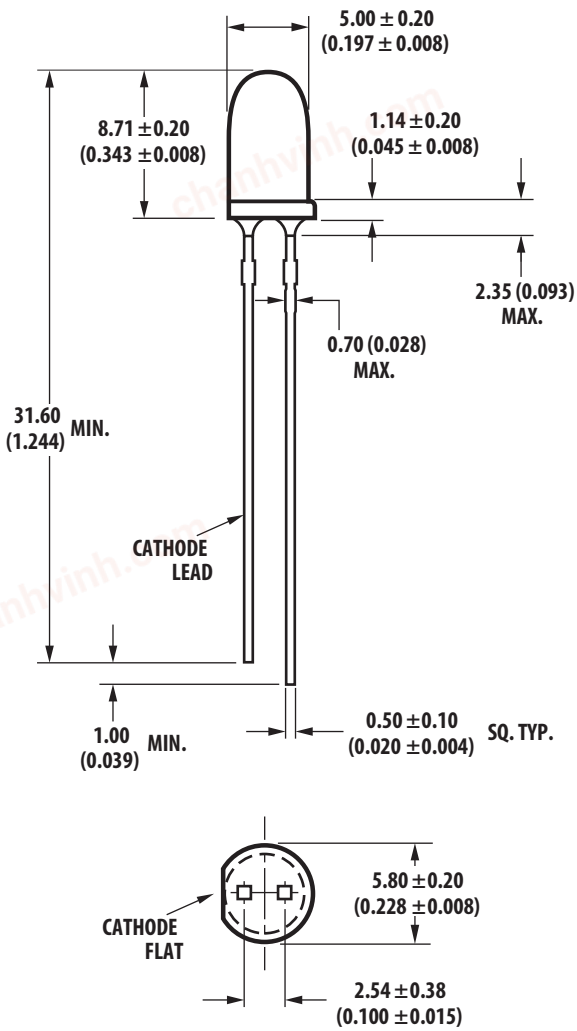

B: Standoff

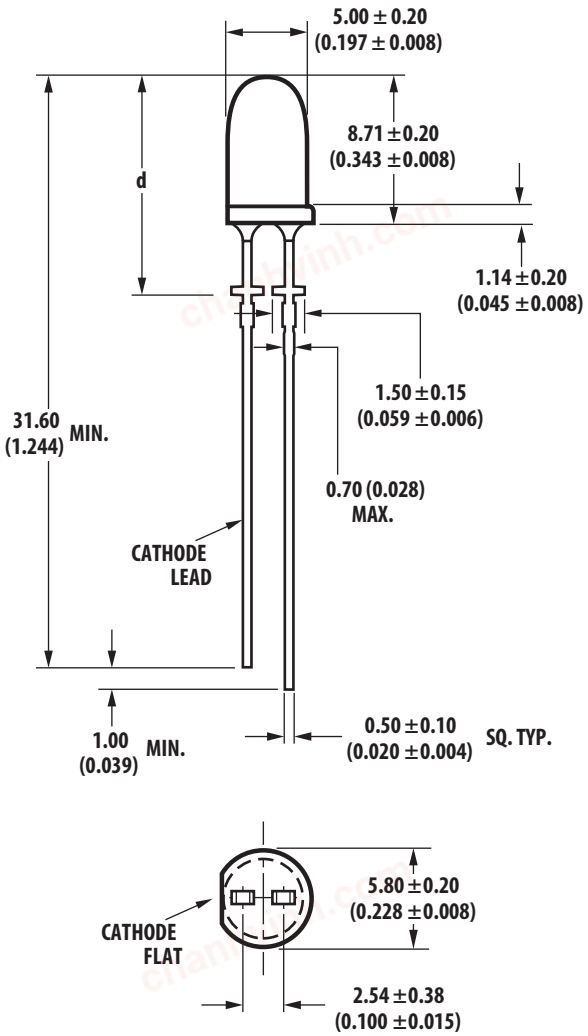

Viewing Angle	d
HLMP-Ex1B	12.39±0.25 (0.476±0.010)
HLMP-Ex3B	11.96±0.25 (0.459±0.010)

Notes:
1. All dimensions are in millimeters (inches)
2. Leads are mild steel with tin plating.
3. The epoxy meniscus is 1.21mm max
4. For Identification of polarity after the leads are trimmed off, please refer to the illustration below:

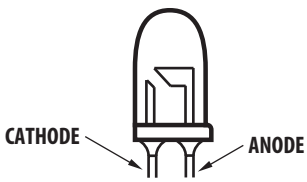

chanhvinh.com

Device Selection Guide

Minimum viewing Angle $2\theta_{1/2}$ (Deg) [4]	Color and Dominant Wavelength (nm), Typ [3]	Lamps without Standoff on leads (Package drawing A)	Lamps with Standoff on leads (Package drawing B)	Luminous Intensity Iv (mcd) [1,2,5] at 20 mA	
				Min	Max
15°	Amber 590	HLMP-EL1A-Z1KDV	HLMP-EL1B-Z1KDV	12000	21000
		HLMP-EL1A-Z1LDV	HLMP-EL1B-Z1LDV	12000	21000
	Red 626	HLMP-EG1A-Z10DV	HLMP-EG1B-Z10DV	12000	21000
30°	Amber 590	HLMP-EL3A-WXKDV	HLMP-EL3B-WXKDV	5500	9300
		HLMP-EL3A-WXLDV	HLMP-EL3B-WXLDV	5500	9300
	Red 626	HLMP-EG3A-WX0DV	HLMP-EG3B-WX0DV	5500	9300

Notes:
1. The luminous intensity is measured on the mechanical axis of the lamp package.
2. The optical axis is closely aligned with the package mechanical axis.
3. Dominant wavelength, λ_d, is derived from the CIE Chromaticity Diagram and represents the color of the lamp.
4. $\theta_{1/2}$ is the off-axis angle where the luminous intensity is half the on-axis intensity.
5. Tolerance for each bin limit is ±15%

Part Numbering System

HLMP-E x xx – x x x xx

Packaging Option
DV: Ammo Pack with minimum viewing angle of 15° or 30°

Color Bin Selection
0: Full Distribution
K: Color Bin 2 & 4
L: Color Bin 4 & 6

Maximum Intensity Bin
Refer to Selection Guide

Minimum Intensity Bin
Refer to Devise Selection Guide

Viewing Angle and Lead Standoffs
1A: 15° without lead standoff
1B: 15° with lead standoff
3A: 30° without lead standoff
3B: 30° with lead standoff

Color
G: Red 626
L: Amber 590

Note: Please refer to AB 5337 for complete information on part numbering system.

chanhvinh.com

Absolute Maximum Ratings

T_J = 25°C

Parameter	Red/ Amber	Unit
DC Forward Current [2]	50	mA
Peak Forward Current	100 [1]	mA
Average Forward Current	30	mA
Power Dissipation	120	mW
Reverse Voltage	5	V
Operating Temperature Range	-40 to +100	°C
Storage Temperature Range	-40 to +100	°C

Notes:
1. Duty Factor 30%, frequency 1KHz.
2. Derate linearly as shown in Figure 4

Electrical / Optical Characteristics

T_J = 25°C

Parameter	Symbol	Min	Typ.	Max	Units	Test Conditions
Forward Voltage Red / Amber	V_F	1.8	2.1	2.4	V	I_F = 20 mA
Reverse Voltage	V_R	5			V	I_R = 100 µA
Dominant Wavelength[1] Amber Red	λ_d	 587.0 618.0	 590.0 626.0	 594.5 630.0	nm	I_F = 20 mA
Peak Wavelength Amber Red	λ_{PEAK}		 594 634		nm	Peak of Wavelength of Spectral Distribution at I_F = 20 mA
Spectral Halfwidth Amber Red	$\Delta\lambda_{1/2}$		 13 14		nm	I_F = 20 mA
Thermal resistance	$R\Phi_{J\text{-}PIN}$		240		°C/W	LED junction to anode lead
Luminous Efficacy [2] Amber Red	η_v		 500 200		lm/W	Emitted Luminous Flux/Emitted Radiant Flux
Luminous Flux Amber Red	Φ_v		 2000 1900		mlm	I_F = 20 mA
Luminous Efficiency [3] Amber Red	η_e		 50 55		lm/W	Emitted Luminous Flux/Electrical Power
Thermal coefficient of λ_d Amber Red			 0.08 0.05		nm/°C	I_F = 20 mA ; +25°C ≤ T_J ≤ +100°C

Notes:
1. The dominant wavelength, λ_d is derived from the CIE Chromaticity Diagram referenced to Illuminant E. Tolerance for each color of dominant wavelength is +/- 0.5nm.
2. The radiant intensity, Ie in watts per steradian, maybe found from the equation $I_e = I_v / \eta_V$ where Iv is the luminous intensity in candela and η_V is the luminous efficacy in lumens/ watt.
3. $\eta_e = \Phi_v / I_F \times V_F$ where Φ_v is the emitted luminous flux, I_F is electrical forward current and V_F is the forward voltage.

chanhvinh.com

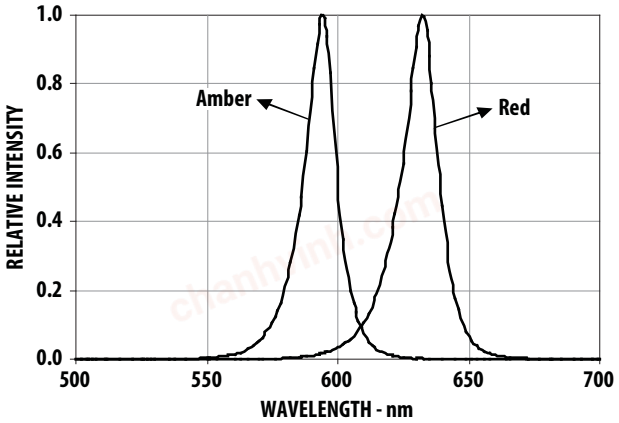

Figure 1. Relative Intensity vs Peak Wavelength

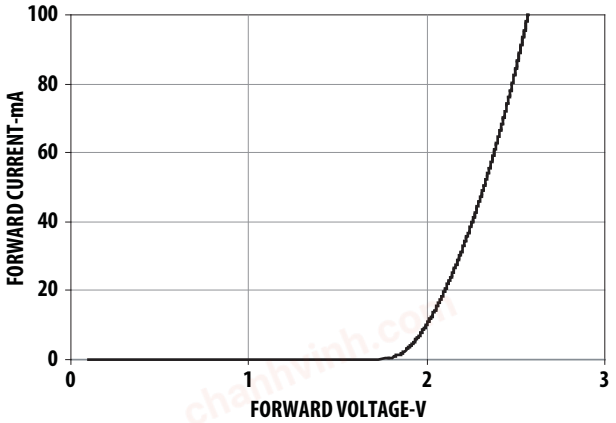

Figure 2. Forward Current vs Forward Voltage

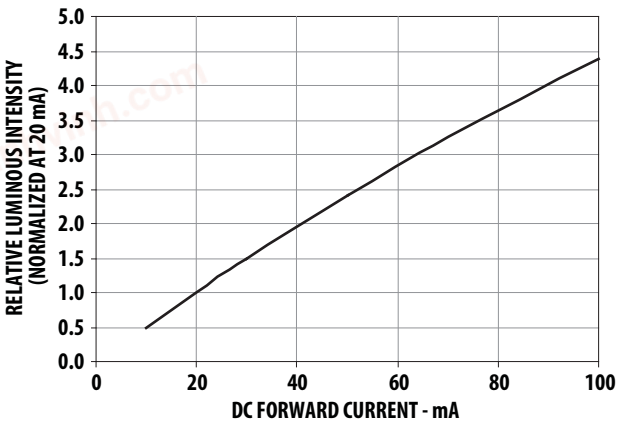

Figure 3. Relative Luminous Intensity vs Forward Current

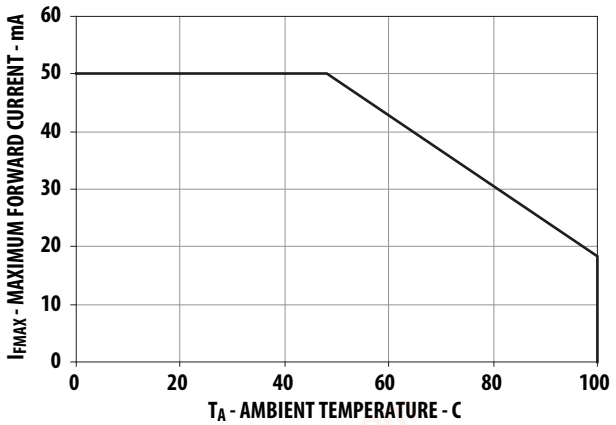

Figure 4. Maximum Forward Current vs Ambient Temperature

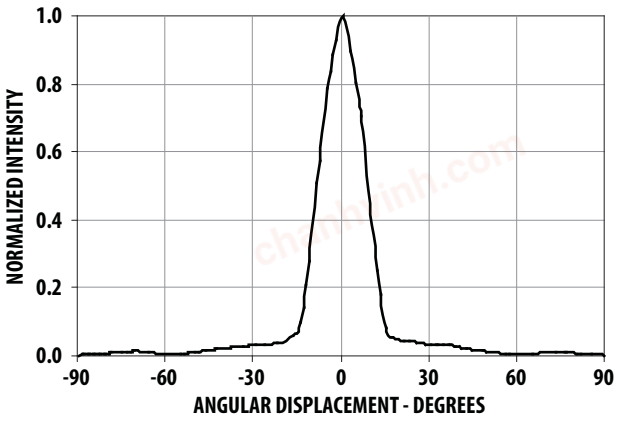

Figure 5. Radiation Pattern for 15° (minimum 15°)

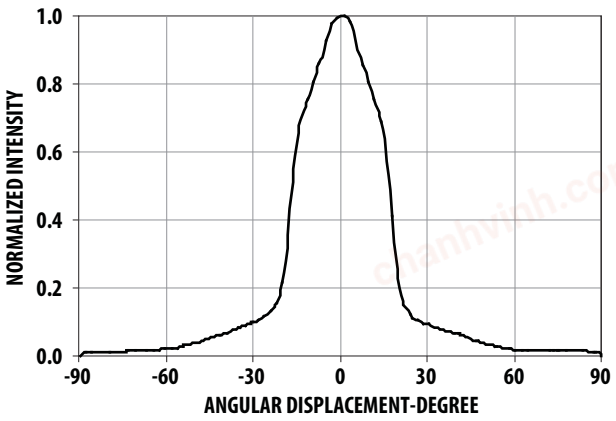

Figure 6. Radiation Pattern for 30° (minimum 30°)

chanhvinh.com

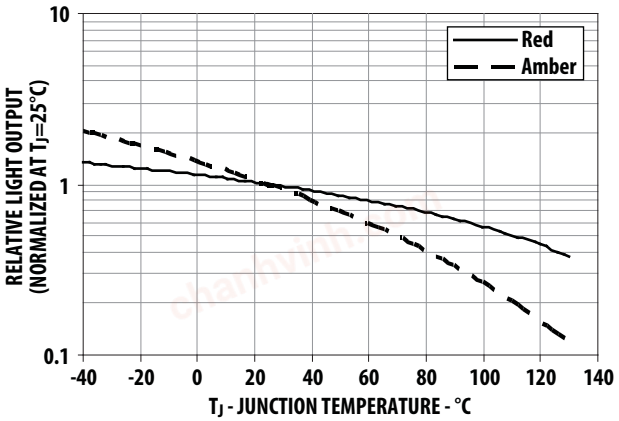

Figure 7. Relative Light Output vs Junction Temperature

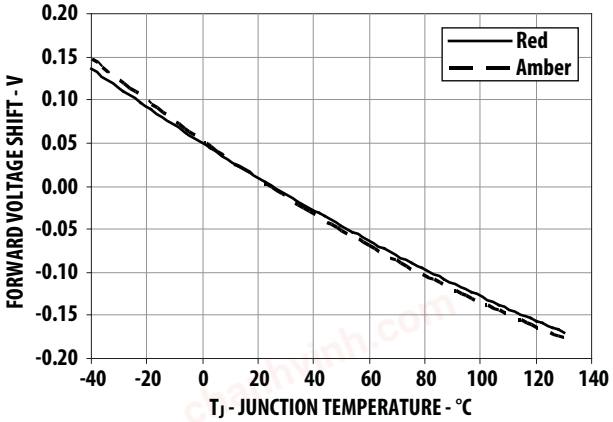

Figure 8. Relative Forward Voltage vs Junction Temperature

Intensity Bin Limit Table (1.3:1 Iv bin ratio)

	Intensity (mcd) at 20mA	
Bin	**Min**	**Max**
W	5500	7200
X	7200	9300
Y	9300	12000
Z	12000	16000
1	16000	21000

Tolerance for each bin limit is ± 15%

V_F Bin Table (V at 20mA)

Bin ID	Min	Max
VD	1.8	2.0
VA	2.0	2.2
VB	2.2	2.4

Tolerance for each bin limit is ± 0.05V

Red Color Range

Min Dom	Max Dom	X min	Y Min	X max	Y max
618.0	630.0	0.6872	0.3126	0.6890	0.2943
		0.6690	0.3149	0.7080	0.2920

Tolerance for each bin limit is ± 0.5nm

Amber Color Range

Bin	Min Dom	Max Dom	Xmin	Ymin	Xmax	Ymax
2	587.0	589.5	0.5570	0.4420	0.5670	0.4250
			0.5530	0.4400	0.5720	0.4270
4	589.5	592.0	0.5720	0.4270	0.5820	0.4110
			0.5670	0.4250	0.5870	0.4130
6	592.0	594.5	0.5870	0.4130	0.5950	0.3980
			0.5820	0.4110	0.6000	0.3990

Tolerance for each bin limit is ± 0.5nm

Note:
All bin categories are established for classification of products. Products may not be available in all bin categories. Please contact Avago representative for further information.

chanhvinh.com

Avago Color Bin on CIE 1931 Chromaticity Diagram

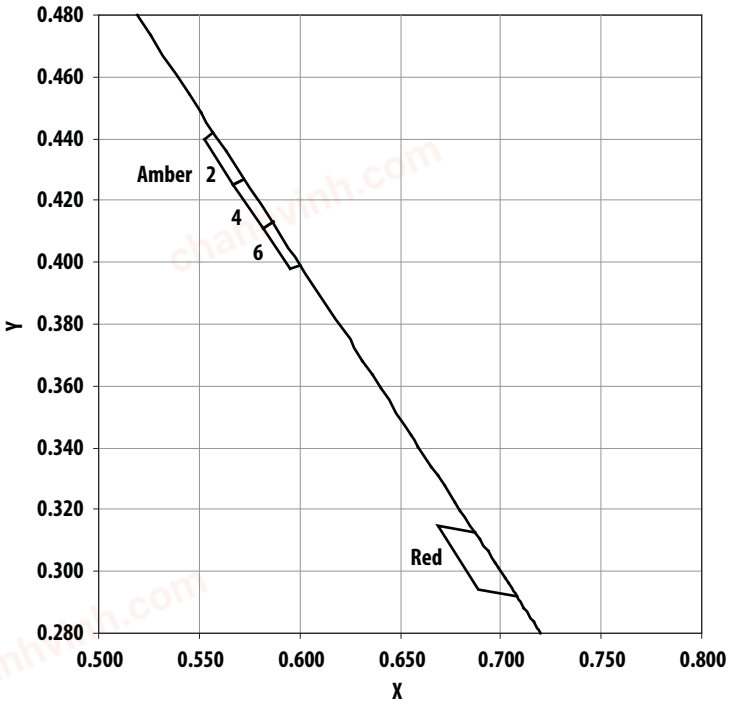

chanhvinh.com

Precautions:

Lead Forming:

- The leads of an LED lamp may be preformed or cut to length prior to insertion and soldering on PC board.
- For better control, it is recommended to use proper tool to precisely form and cut the leads to applicable length rather than doing it manually.
- If manual lead cutting is necessary, cut the leads after the soldering process. The solder connection forms a mechanical ground which prevents mechanical stress due to lead cutting from traveling into LED package. This is highly recommended for hand solder operation, as the excess lead length also acts as small heat sink.

Soldering and Handling:

- Care must be taken during PCB assembly and soldering process to prevent damage to the LED component.
- LED component may be effectively hand soldered to PCB. However, it is only recommended under unavoidable circumstances such as rework. The closest manual soldering distance of the soldering heat source (soldering iron's tip) to the body is 1.59mm. Soldering the LED using soldering iron tip closer than 1.59mm might damage the LED.

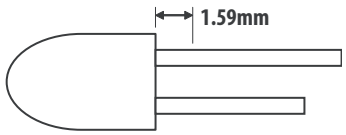

- ESD precaution must be properly applied on the soldering station and personnel to prevent ESD damage to the LED component that is ESD sensitive. Do refer to Avago application note AN 1142 for details. The soldering iron used should have grounded tip to ensure electrostatic charge is properly grounded.
- Recommended soldering condition:

	Wave Soldering [1, 2]	Manual Solder Dipping
Pre-heat temperature	105°C Max.	–
Preheat time	60 sec Max	–
Peak temperature	260°C Max.	260°C Max.
Dwell time	5 sec Max.	5 sec Max

Note:
1. Above conditions refers to measurement with thermocouple mounted at the bottom of PCB.
2. It is recommended to use only bottom preheaters in order to reduce thermal stress experienced by LED.

- Wave soldering parameters must be set and maintained according to the recommended temperature and dwell time. Customer is advised to perform daily check on the soldering profile to ensure that it is always conforming to recommended soldering conditions.

Note:
1. PCB with different size and design (component density) will have different heat mass (heat capacity). This might cause a change in temperature experienced by the board if same wave soldering setting is used. So, it is recommended to re-calibrate the soldering profile again before loading a new type of PCB.
2. Avago Technologies' high brightness LED are using high efficiency LED die with single wire bond as shown below. Customer is advised to take extra precaution during wave soldering to ensure that the maximum wave temperature does not exceed 260°C and the solder contact time does not exceeding 5sec. Over-stressing the LED during soldering process might cause premature failure to the LED due to delamination.

Avago Technologies LED Configuration

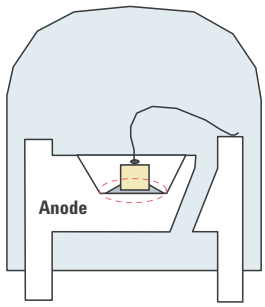

Note: Electrical connection between bottom surface of LED die and the lead frame is achieved through conductive paste.

- Any alignment fixture that is being applied during wave soldering should be loosely fitted and should not apply weight or force on LED. Non metal material is recommended as it will absorb less heat during wave soldering process.

  Note: In order to further assist customer in designing jig accurately that fit Avago Technologies' product, 3D model of the product is available upon request.
- At elevated temperature, LED is more susceptible to mechanical stress. Therefore, PCB must allowed to cool down to room temperature prior to handling, which includes removal of alignment fixture or pallet.
- If PCB board contains both through hole (TH) LED and other surface mount components, it is recommended that surface mount components be soldered on the top side of the PCB. If surface mount need to be on the bottom side, these components should be soldered using reflow soldering prior to insertion the TH LED.
- Recommended PC board plated through holes (PTH) size for LED component leads.

LED component lead size	Diagonal	Plated through hole diameter
0.45 x 0.45 mm (0.018x 0.018 inch)	0.636 mm (0.025 inch)	0.98 to 1.08 mm (0.039 to 0.043 inch)
0.50 x 0.50 mm (0.020x 0.020 inch)	0.707 mm (0.028 inch)	1.05 to 1.15 mm (0.041 to 0.045 inch)

- Over-sizing the PTH can lead to twisted LED after clinching. On the other hand under sizing the PTH can cause difficulty inserting the TH LED.

chanhvinh.com

Refer to application note AN5334 for more information about soldering and handling of high brightness TH LED lamps.

Example of Wave Soldering Temperature Profile for TH LED

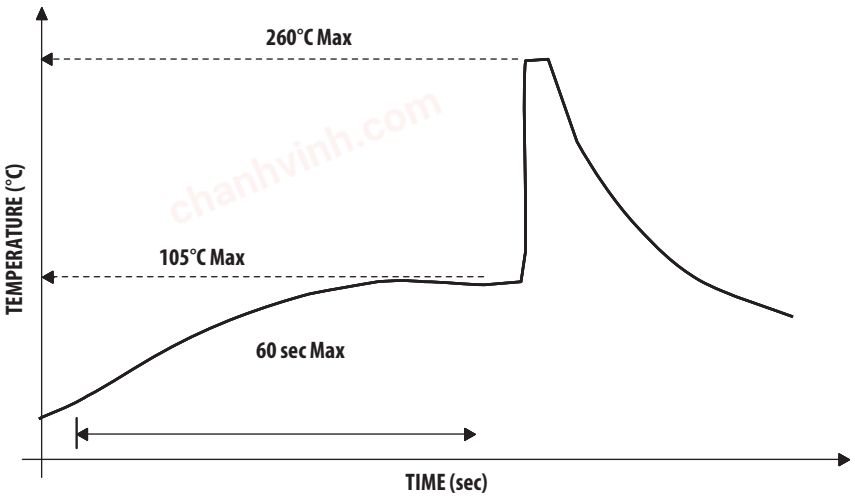

Recommended solder:
Sn63 (Leaded solder alloy)
SAC305 (Lead free solder alloy)

Flux: Rosin flux

Solder bath temperature: 255°C ± 5°C
(maximum peak temperature = 260°C)

Dwell time: 3.0 sec - 5.0 sec
(maximum = 5 sec)

Note: Allow for board to be sufficiently cooled to room temperature before exerting mechanical force.

Ammo Packs Drawing

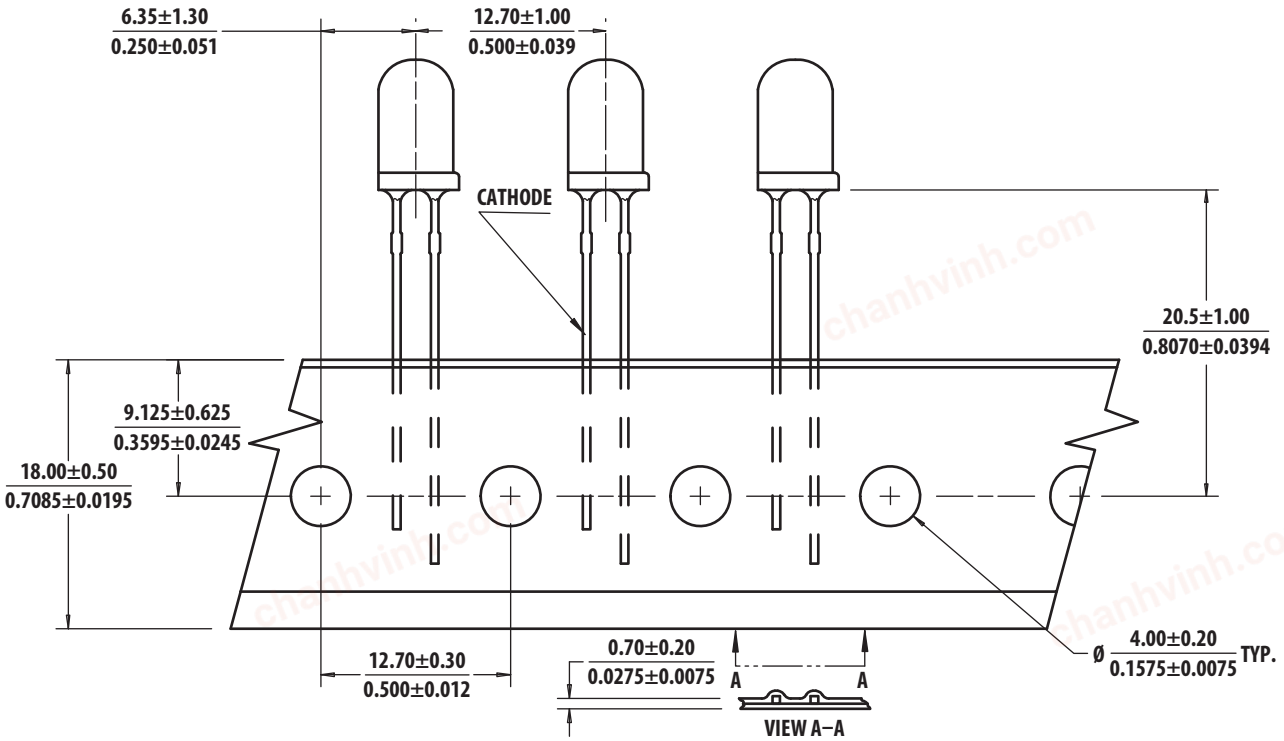

Note: The ammo-packs drawing is applicable for packaging option –DD & -ZZ and regardless standoff or non-standoff

chanhvinh.com

Packaging Box for Ammo Packs

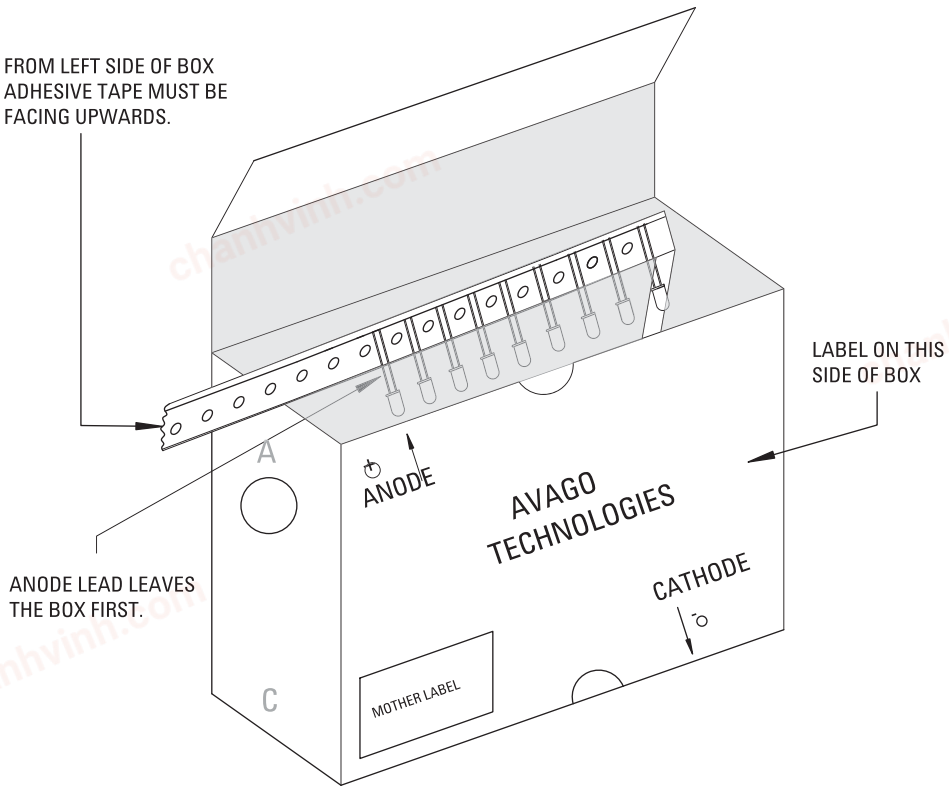

Note: The dimension for ammo pack is applicable for the device with standoff and without standoff.

Packaging Label:

(i) Avago Mother Label: (Available on packaging box of ammo pack and shipping box)

AVAGO TECHNOLOGIES

STANDARD LABEL LS0002
RoHS Compliant
e3 max temp 260C

(1P) Item: **Part Number**

(1T) Lot: **Lot Number**

(Q) QTY: **Quantity**

LPN:

CAT: **Intensity Bin**

(9D)MFG Date: **Manufacturing Date**

BIN: **Refer to below information**

(P) Customer Item:

(V) Vendor ID:

(9D) Date Code: **Date Code**

DeptID:

Made In: **Country of Origin**

chanhvinh.com

(ii) Avago Baby Label (Only available on bulk packaging)

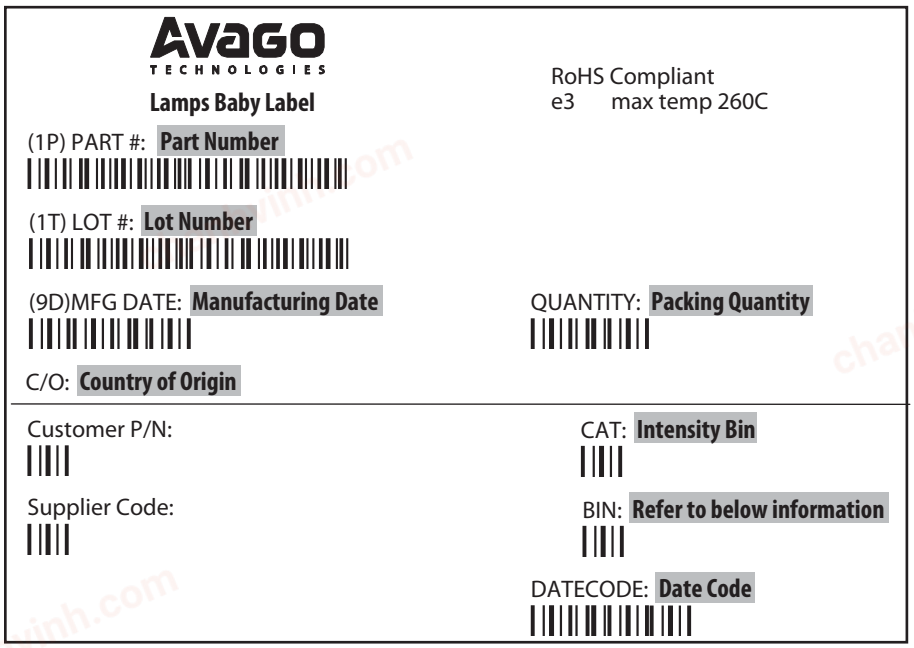

Acronyms and Definition:

BIN:

(i) Color bin only or VF bin only

(Applicable for part number with color bins but without VF bin OR part number with VF bins and no color bin)

OR

(ii) Color bin incorporated with VF Bin

(Applicable for part number that have both color bin and VF bin)

Example:

(i) Color bin only or VF bin only

BIN: 2 (represent color bin 2 only)

BIN: VB (represent VF bin "VB" only)

(ii) Color bin incorporate with VF Bin

BIN: 2VB

VB: VF bin "VB"

2: Color bin 2 only

DISCLAIMER: *AVAGO'S PRODUCTS AND SOFTWARE ARE NOT SPECIFICALLY DESIGNED, MANUFACTURED OR AUTHORIZED FOR SALE AS PARTS, COMPONENTS OR ASSEMBLIES FOR THE PLANNING, CONSTRUCTION, MAINTENANCE OR DIRECT OPERATION OF A NUCLEAR FACILITY OR FOR USE IN MEDICAL DEVICES OR APPLICATIONS. CUSTOMER IS SOLELY RESPONSIBLE, AND WAIVES ALL RIGHTS TO MAKE CLAIMS AGAINST AVAGO OR ITS SUPPLIERS, FOR ALL LOSS, DAMAGE, EXPENSE OR LIABILITY IN CONNECTION WITH SUCH USE.*

For product information and a complete list of distributors, please go to our web site: **www.avagotech.com**

Avago, Avago Technologies, and the A logo are trademarks of Avago Technologies in the United States and other countries.
Data subject to change. Copyright © 2005-2010 Avago Technologies. All rights reserved.
AV02-2459EN - April 20, 2010