chanhvinh.com

HLMP-C115, HLMP-C117, HLMP-C123, HLMP-C215, HLMP-C223, HLMP-C315, HLMP-C323, HLMP-C415, HLMP-C423, HLMP-C515, HLMP-C523, HLMP-C615, HLMP-C623

T-1¾ Super Ultra-Bright LED Lamps

Data Sheet

Description

These non-diffused lamps are designed to produce a bright light source and smooth radiation pattern. This lamp has been designed with a 20 mil lead frame, enhanced flange, and tight meniscus controls, making it compatible with radial lead automated insertion equipment.

Applications

- Ideal for backlighting front panels*
- Used for lighting switches
- Adapted for indoor and outdoor signs

Features

- Very high intensity
- Exceptional uniformity
- Consistent viewability
  All colors:
  AlGaAs Red
  High Efficiency Red
  Yellow
  Orange
  Green
  Emerald Green
- 15° and 25° family
- Tape and reel options available
- Binned for color and intensity

chanhvinh.com

Selection Guide

Color	$2\theta^{1/2}$[1]	Standoff Leads	Part Number HLMP-	Luminous Intensity Iv (mcd) Min.	Max.
DH AS AlGaAs	15	No	C115	290.0	–
			C115-O00xx	290.0	–
			C115-OP0xx	290.0	1000.0
		Yes	C117-OP0xx	290.0	1000.0
	25	No	C123	90.2	–
			C123-L00xx	90.2	–
Red	15	No	C215	138.0	–
			C215-M00xx	138.0	–
			C215-MN0xx	138.0	400.0
	25	No	C223	90.2	–
			C223-L00xx	90.2	–
			C223-MN0xx	138.0	400.0
Yellow	15	No	C315	147.0	–
			C315-L00xx	147.0	–
			C315-LM0xx	147.0	424.0
	25	No	C323	96.2	–
			C323-K00xx	96.2	–
			C323-KL0xx	96.2	294.0
Orange	15	No	C415	138.0	–
			C415-M00xx	138.0	–
			C415-M0D0xx	138.0	–
			C415-MN0xx	138.0	400.0
	25	No	C423	90.2	–
			C423-L00xx	90.2	–
			C423-LM0xx	90.2	276.0
Green	15	No	C515	170.0	–
			C515-L00xx	170.0	
			C515-LM0xx	170.0	490.0
	25	No	C523	69.8	–
			C523-J00xx	69.8	–
			C523-KL0xx	111.7	340.0
Emerald Green	15	No	C615	17.0	–
			C615-G00xx	17.0	–
	25	No	C623	6.7	–
			C623-E00xx	6.7	–

chanhvinh.com

Part Numbering System

HLMP - C x xx - x x x xx

Mechanical Options
00: Bulk
01: Tape & Reel, Crimped Leads
02: Tape & Reel, Straight Leads
B2: Right Angle Housing, Even Leads
UQ: Ammo Pack, Horizontal Leads

Color Bin Options
0: Full Color Bin Distribution
D: Color Bins 4 & 5 only

Maximum Iv Bin Options
0: Open (No Maximum Limit)
Others: Please refer to the Iv Bin Table

Minimum Iv Bin Options
Please refer to the Iv Bin Table

Viewing Angle & Standoffs Options
15: 15 Degree, without Standoffs
17: 15 Degree, with Standoffs
23: 25 Degree, without Standoffs

Color Options
1. AS AlGaAs Red
2. High Efficiency Red
3. Yellow
4. Orange
5. Green
6. Emerald Green

Package Options
C: T-1 3/4 (5 mm)

chanhvinh.com

Package Dimensions

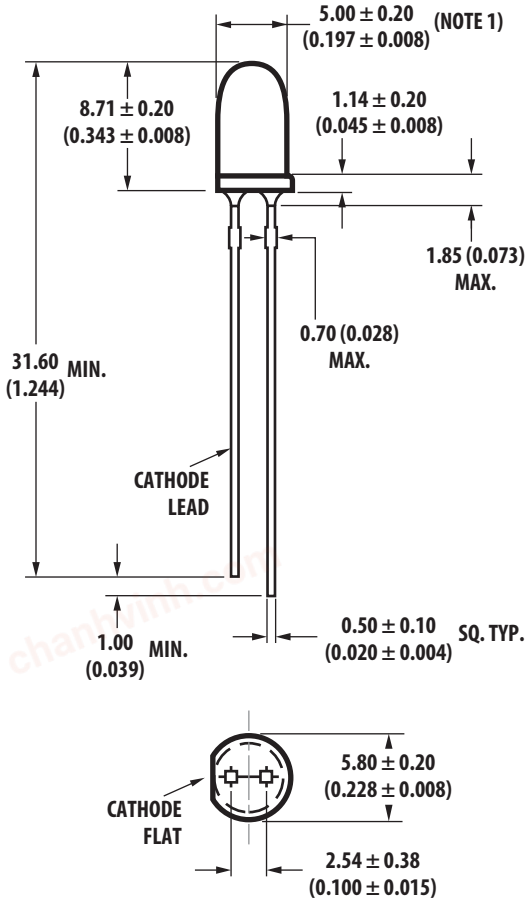

HLMP-Cx15 and HLMP-Cx23

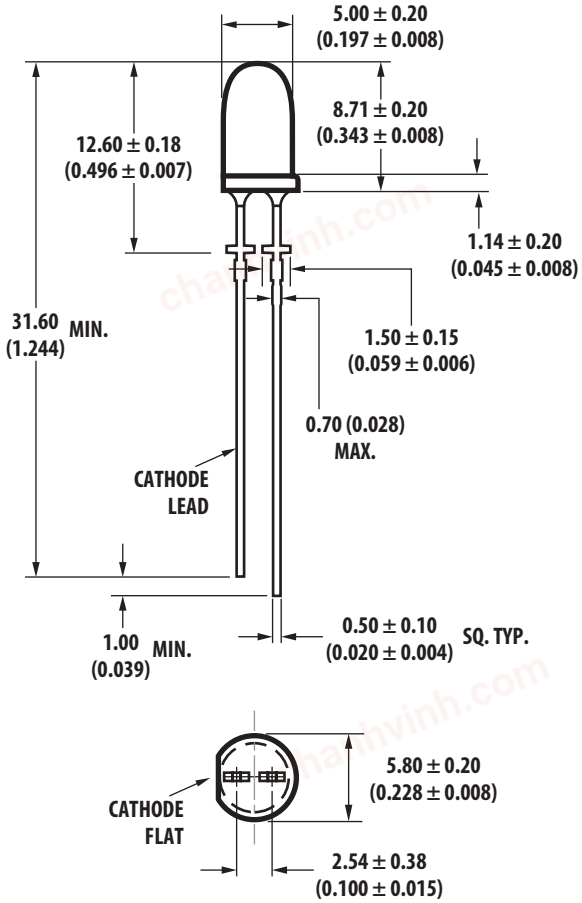

HLMP-Cx17

Notes:
1. All dimensions are in millimeters (inches).
2. An epoxy meniscus may extend about 0.5 mm (0.020 in.) down the leads.
3. For PCB hole recommendations, see the Precautions section.

Absolute Maximum Ratings at $T_A = 25°C$

Parameter	DH AS AlGaAs Red	High Efficiency Red and Orange	Yellow	High Performance Green and Emerald Green	Units
DC Forward Current[1]	30	30	20	30	mA
Transient Forward Current[2] (10 μsec Pulse)	500	500	500	500	mA
Reverse Voltage (Ir = 100 μA)	5	5	5	5	V
LED Junction Temperature	110	110	110	110	°C
Operating Temperature Range	–20 to +100	–40 to +100	–40 to +100	–20 to +100	°C
Storage Temperature Range	–40 to +100	–40 to +100	–40 to +100	–40 to +100	°C

Notes:
1. See Figure 5 for maximum current derating vs. ambient temperature.
2. The transient current is the maximum nonrecurring peak current the device can withstand without damaging the LED die and wire bond.

chanhvinh.com

Electrical Characteristics at $T_A = 25°C$

Part Number	Forward Voltage Vf (Volts) @ If = 20 mA Typ.	Forward Voltage Vf (Volts) @ If = 20 mA Max.	Reverse Breakdown Vr (Volts) @ Ir = 100 μA Min.	Capacitance C (pF) Vf = 0 f = 1 MHz Typ.	Thermal Resistance $R\theta_{J\text{-}PIN}$ (°C/W)	Speed of Response τ_s (ns) Time Constant $e^{-t/\tau s}$ Typ.
HLMP-C115 HLMP-C117 HLMP-C123	1.8	2.2	5	30	210	30
HLMP-C215 HLMP-C223	1.9	2.6	5	11	210	90
HLMP-C315 HLMP-C323	2.1	2.6	5	15	210	90
HLMP-C415 HLMP-C423	1.9	2.6	5	4	210	280
HLMP-C515 HLMP-C523	2.2	3.0	5	18	210	260
HLMP-C615 HLMP-C623	2.2	3.0	5	18	210	260

Optical Characteristics at $T_A = 25°C$

Part Number	Luminous Intensity Iv (mcd) @ 20 mA[1] Min.	Luminous Intensity Iv (mcd) @ 20 mA[1] Typ.	Peak Wavelength λ_{peak} (nm) Typ.	Color, Dominant Wavelength λ_d[2] (nm) Typ.	Viewing Angle $2\theta_{½}$ (Degrees)[3] Typ.	Luminous Efficacy η_v (lm/w)
HLMP-C115 HLMP-C117	290	600	645	637	11	80
HLMP-C123	90	200			26	
HLMP-C215	138	300	635	626	17	145
	90	170			23	
HLMP-C315	146	300	583	585	17	500
	96	170			25	
HLMP-C415	138	300	600	602	17	380
	90	170			23	
HLMP-C515	170	300	568	570	20	595
	69	170			28	
HLMP-C615	17	45	558	560	20	656
	6	27			28	

Notes:
1. The luminous intensity, Iv, is measured at the mechanical axis of the lamp package. The actual peak of the spatial radiation pattern may not be aligned with this axis.
2. The dominant wavelength, λ_d, is derived from the CIE Chromaticity Diagram and represents the color of the device.
3. $2\theta_{½}$ is the off-axis angle where the luminous intensity is ½ the on-axis intensity.

chanhvinh.com

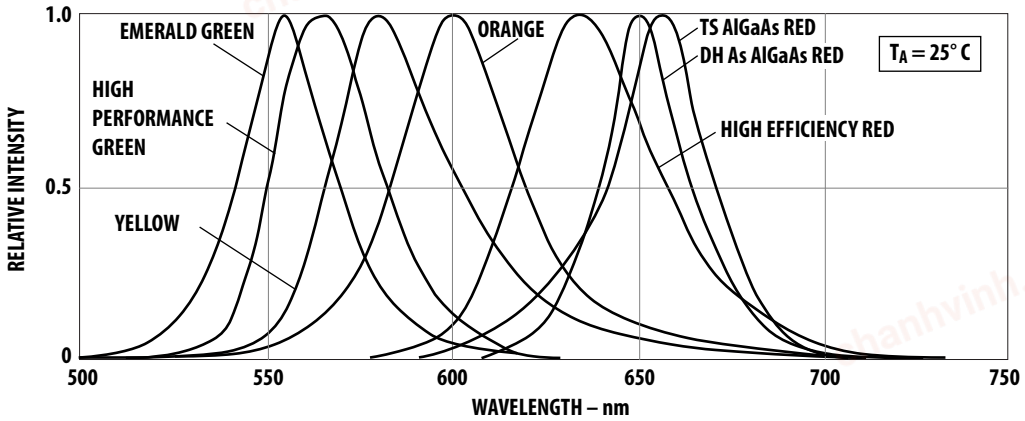

Figure 1. Relative intensity vs. wavelength.

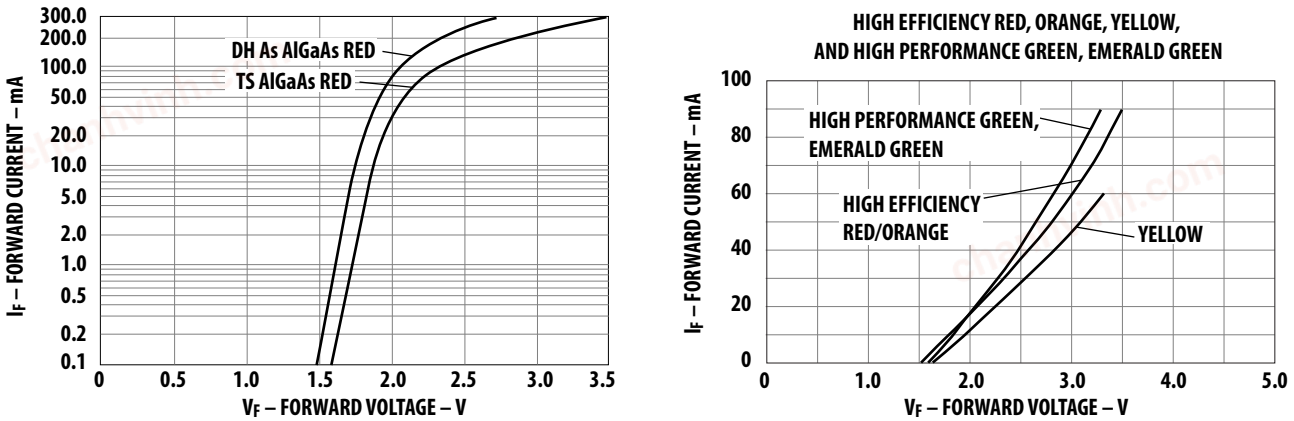

Figure 2. Forward current vs. forward voltage (non-resistor lamp).

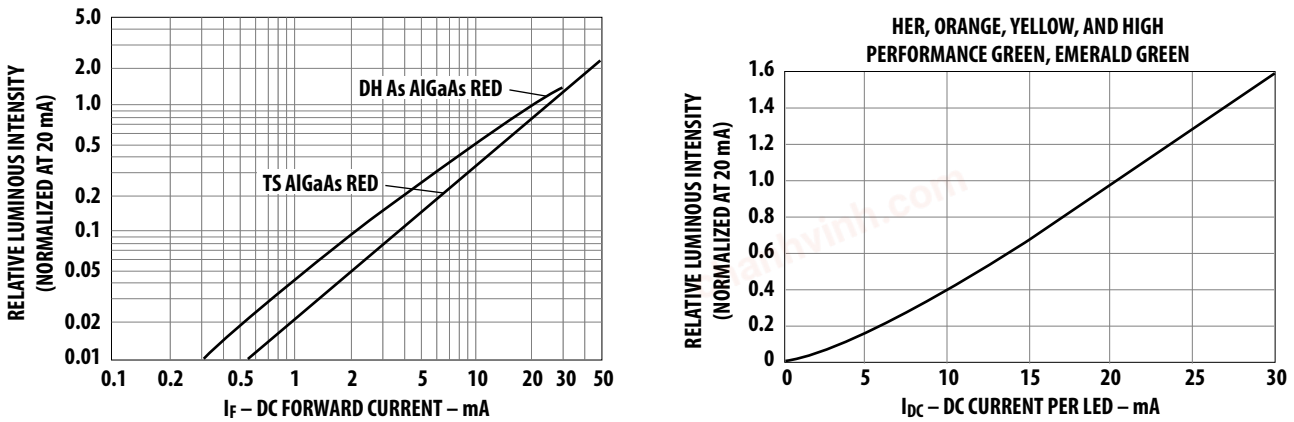

Figure 3. Relative luminous intensity vs. forward current.

chanhvinh.com

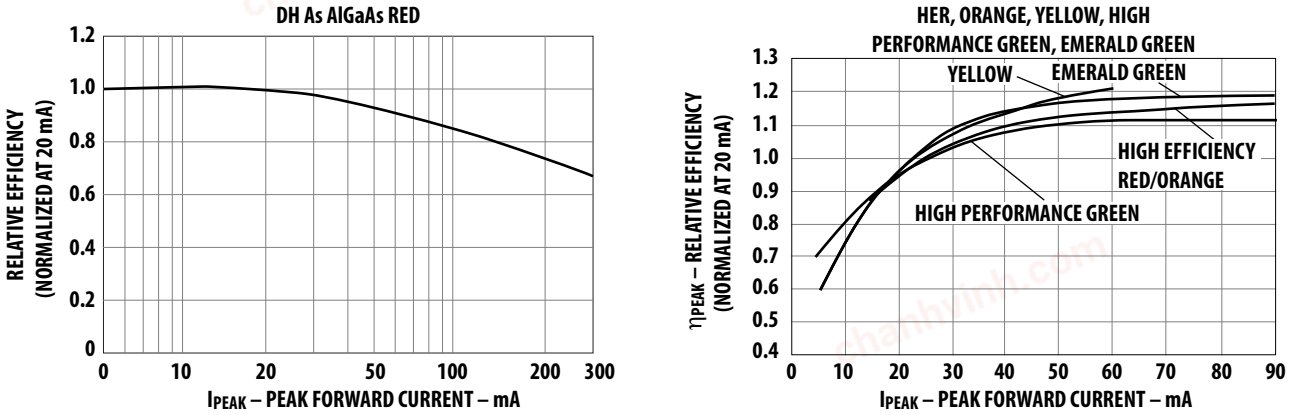

Figure 4. Relative efficiency (luminous intensity per unit current) vs. peak current.

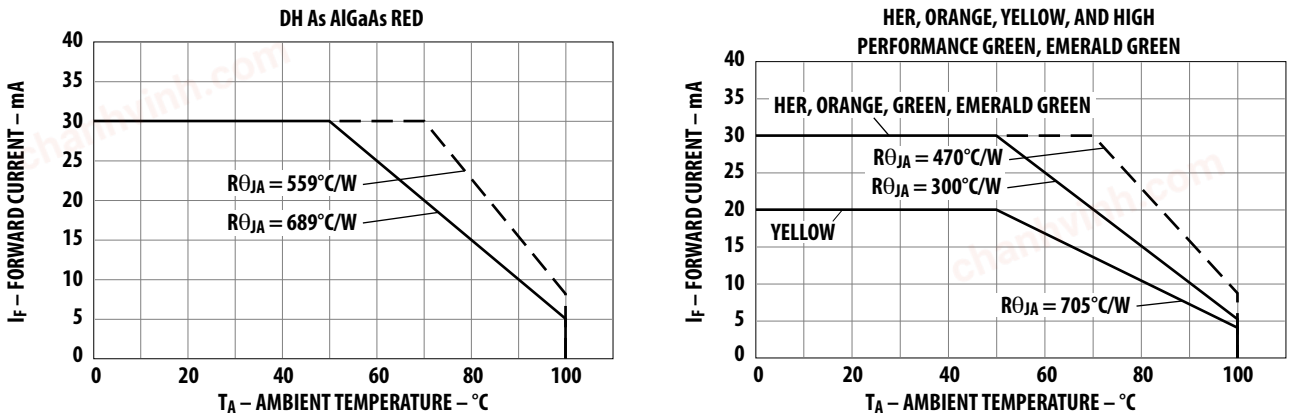

Figure 5. Maximum forward dc current vs. ambient temperature. Derating based on $T_jMAX = 110°C$.

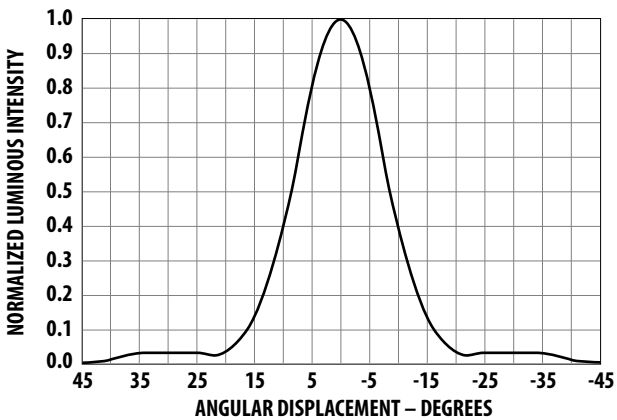

Figure 6. Relative luminous intensity vs. angular displacement. 15 degree family.

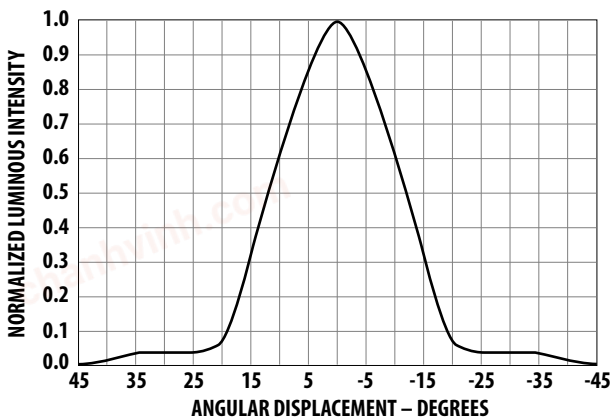

Figure 7. Relative luminous intensity vs. angular displacement. 25 degree family.

chanhvinh.com

Intensity Bin Limits

Color	Bin	Intensity Range (mcd) Min.	Max.
Red/Orange	L	101.5	162.4
	M	162.4	234.6
	N	234.6	340.0
	O	340.0	540.0
	P	540.0	850.0
	Q	850.0	1200.0
	R	1200.0	1700.0
	S	1700.0	2400.0
	T	2400.0	3400.0
	U	3400.0	4900.0
	V	4900.0	7100.0
	W	7100.0	10200.0
	X	10200.0	14800.0
	Y	14800.0	21400.0
	Z	21400.0	30900.0
Yellow	L	173.2	250.0
	M	250.0	360.0
	N	360.0	510.0
	O	510.0	800.0
	P	800.0	1250.0
	Q	1250.0	1800.0
	R	1800.0	2900.0
	S	2900.0	4700.0
	T	4700.0	7200.0
	U	7200.0	11700.0
	V	11700.0	18000.0
	W	18000.0	27000.0
Green/ Emerald Green	E	7.6	12.0
	F	12.0	19.1
	G	19.1	30.7
	H	30.7	49.1
	I	49.1	78.5
	J	78.5	125.7
	K	125.7	201.1
	L	201.1	289.0
	M	289.0	417.0
	N	417.0	680.0
	O	680.0	1100.0
	P	1100.0	1800.0
	Q	1800.0	2700.0
	R	2700.0	4300.0
	S	4300.0	6800.0
	T	6800.0	10800.0
	U	10800.0	16000.0
	V	16000.0	25000.0
	W	25000.0	40000.0

Maximum tolerance for each bin limit is ± 18%.

Color Categories

Color	Category#	Lambda (nm) Min.	Max.
Green	6	561.5	564.5
	5	564.5	567.5
	4	567.5	570.5
	3	570.5	573.5
	2	573.5	576.5
Yellow	1	582.0	584.5
	3	584.5	587.0
	2	587.0	589.5
	4	589.5	592.0
	5	592.0	593.0
Orange	1	597.0	599.5
	2	599.5	602.0
	3	602.0	604.5
	4	604.5	607.5
	5	607.5	610.5
	6	610.5	613.5
	7	613.5	616.5
	8	616.5	619.5

Tolerance for each bin limit is ± 0.5 nm.

Mechanical Option Matrix

Mechanical Option Code	Definition
00	Bulk Packaging, minimum increment 500 pcs/bag
01	Tape & Reel, crimped leads, minimum increment 1300 pcs/bag
02	Tape & Reel, straight leads, minimum increment 1300 pcs/bag
B2	Right Angle Housing, even leads, minimum increment 500 pcs/bag
UQ	Ammo Pack, horizontal leads, in 1K minimum increment

Note:
All categories are established for classification of products. Products may not be available in all categories. Please contact your local Avago representative for further clarification/information.

chanhvinh.com

Precautions:

Lead Forming:

- The leads of an LED lamp may be preformed or cut to length prior to insertion and soldering on PC board.
- For better control, it is recommended to use proper tool to precisely form and cut the leads to applicable length rather than doing it manually.
- If manual lead cutting is necessary, cut the leads after the soldering process. The solder connection forms a mechanical ground which prevents mechanical stress due to lead cutting from traveling into LED package. This is highly recommended for hand solder operation, as the excess lead length also acts as small heat sink.

Soldering and Handling:

- Care must be taken during PCB assembly and soldering process to prevent damage to the LED component.
- LED component may be effectively hand soldered to PCB. However, it is only recommended under unavoidable circumstances such as rework. The closest manual soldering distance of the soldering heat source (soldering iron's tip) to the body is 1.59mm. Soldering the LED using soldering iron tip closer than 1.59mm might damage the LED.

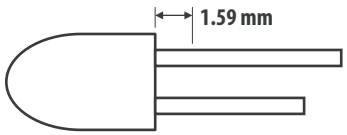

- ESD precaution must be properly applied on the soldering station and by personnel to prevent ESD damage to the LED component that is ESD sensitive. For details, refer to Avago application note AN 1142. The soldering iron used should have a grounded tip to ensure electrostatic charge is properly grounded.
- Recommended soldering conditions:

	Wave Soldering[1],[2]	Manual Solder Dipping
Pre-heat Temperature	105°C Max.	–
Pre-heat Time	60 sec Max.	–
Peak Temperature	250°C Max.	260°C Max.
Dwell Time	3 sec Max.	5 sec Max.

Notes:
1. These conditions refer to measurement with a thermocouple mounted at the bottom of PCB.
2. To reduce thermal stress experienced by the LED, it is recommended that you use only the bottom preheaters.

- Wave soldering parameters must be set and maintained according to the recommended temperature and dwell time. Customer is advised to perform daily check on the soldering profile to ensure that it is always conforming to recommended soldering conditions.

  Note:
  1. PCB with different size and design (component density) will have different heat mass (heat capacity). This might cause a change in temperature experienced by the board if same wave soldering setting is used. So, it is recommended to re-calibrate the soldering profile again before loading a new type of PCB.
  2. Customer is advised to take extra precaution during wave soldering to ensure that the maximum wave temperature does not exceed 250°C and the solder contact time does not exceeding 3sec. Over-stressing the LED during soldering process might cause premature failure to the LED due to delamination.
- Any alignment fixture that is being applied during wave soldering should be loosely fitted and should not apply weight or force on LED. Non metal material is recommended as it will absorb less heat during wave soldering process.
- At elevated temperature, LED is more susceptible to mechanical stress. Therefore, PCB must allowed to cool down to room temperature prior to handling, which includes removal of alignment fixture or pallet.
- If PCB board contains both through hole (TH) LED and other surface mount components, it is recommended that surface mount components be soldered on the top side of the PCB. If surface mount need to be on the bottom side, these components should be soldered using reflow soldering prior to insertion the TH LED.
- Recommended PC board plated through holes (PTH) size for LED component leads.

	LED Component Lead Size	Diagonal	Plated Through-Hole Diameter
Lead size (typ.)	0.45 × 0.45 mm (0.018 × 0.018 in.)	0.636 mm (0.025 in)	0.98 to 1.08 mm (0.039 to 0.043 in)
Dambar shear-off area (max.)	0.65 mm (0.026 in)	0.919 mm (0.036 in)	
Lead size (typ.)	0.50 × 0.50 mm (0.020 × 0.020 in.)	0.707 mm (0.028 in)	1.05 to 1.15 mm (0.041 to 0.045 in)
Dambar shear-off area (max.)	0.70 mm (0.028 in)	0.99 mm (0.039 in)	

- Over-sizing the PTH can lead to a twisted LED after it is clinched. On the other hand, undersizing the PTH can make inserting the TH LED difficult.

For more information about soldering and handling of TH LED lamps, refer to application note AN5334.

chanhvinh.com

Example of Wave Soldering Temperature Profile for TH LED

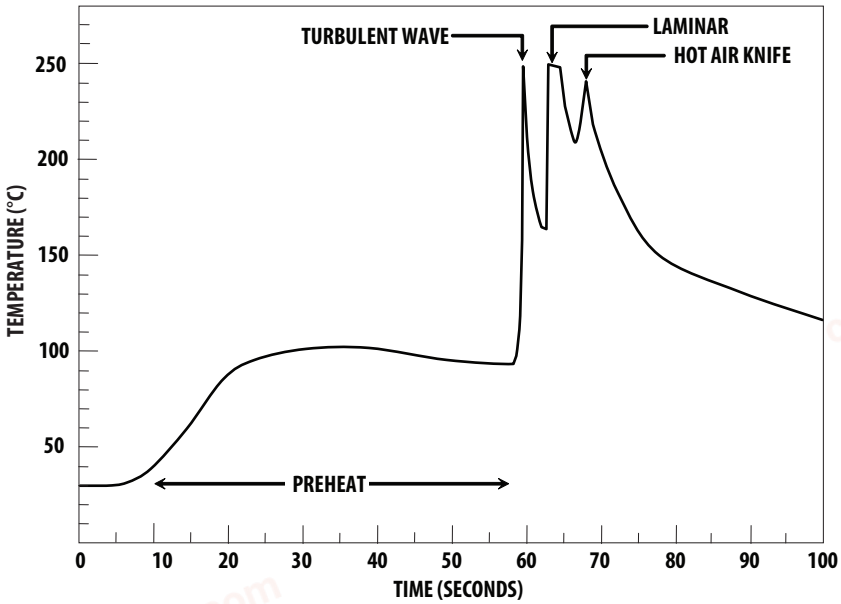

Recommended solder:
Sn63 (Leaded solder alloy)
SAC305 (Lead free solder alloy)

Flux: Rosin flux

Solder bath temperature:
245°C± 5°C (maximum peak temperature = 250°C)

Dwell time: 1.5 sec – 3.0 sec (maximum = 3sec)

Note: Allow for board to be sufficiently cooled to room temperature before exerting mechanical force.

Recommended solder:
Sn63 (Leaded solder alloy)
SAC305 (Lead free solder alloy)

Flux: Rosin flux

Solder bath temperature:
245°C± 5°C (maximum peak temperature = 250°C)

Dwell time: 1.5 sec – 3.0 sec (maximum = 3sec)

Note: Allow for board to be sufficiently cooled to room temperature before exerting mechanical force.

Packaging Label:

(i) Avago Mother Label: (Available on packaging box of ammo pack and shipping box)



chanhvinh.com

(ii) Avago Baby Label (Only available on bulk packaging)

AVAGO TECHNOLOGIES

Lamps Baby Label

RoHS Compliant
e3 max temp 250C

(1P) PART #: Part Number

(1T) LOT #: Lot Number

(9D)MFG DATE: Manufacturing Date

QUANTITY: Packing Quantity

C/O: Country of Origin

Customer P/N:

CAT: Intensity Bin

Supplier Code:

BIN: Color Bin

DATECODE: Date Code

For product information and a complete list of distributors, please go to our web site: **www.avagotech.com**

Avago, Avago Technologies, and the A logo are trademarks of Avago Technologies in the United States and other countries.
Data subject to change. Copyright © 2005-2014 Avago Technologies. All rights reserved. Obsoletes 5989-4251EN
AV02-1561EN - July 24, 2014

AVAGO TECHNOLOGIES