chanhvinh.com

HLMP-AG64/65, HLMP-AM64/65, HLMP-AB64/65

Precision Optical Performance Red Green and Blue New 5mm Mini Oval LEDs

AVAGO TECHNOLOGIES

Data Sheet

Lead (Pb) Free
RoHS 6 fully compliant

Description

These Precision Optical Performance Oval LEDs are specifically designed for full color/video and passenger information signs. The oval shaped radiation pattern and high luminous intensity ensure that these devices are excellent for wide field of view outdoor applications where a wide viewing angle and readability in sunlight are essential. The package epoxy contains both UV-A and UV-B inhibitors to reduce the effects of long term exposure to direct sunlight.

Features

- Well defined spatial radiation pattern
- High brightness material
- Available in red, green and blue color
  - Red AlInGaP 626 nm
  - Green InGaN 525nm
  - Blue InGaN 470nm
- Superior resistance to moisture
- Standoff Package
- Tinted and diffused
- Typical viewing angle 30° x 70°

Applications

- Full color signs

Package Dimensions

Package drawing A

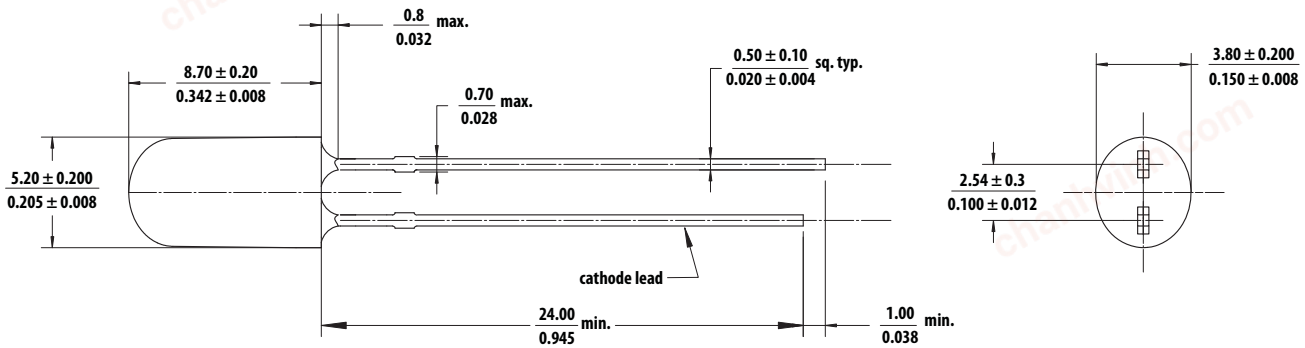

Package drawing B

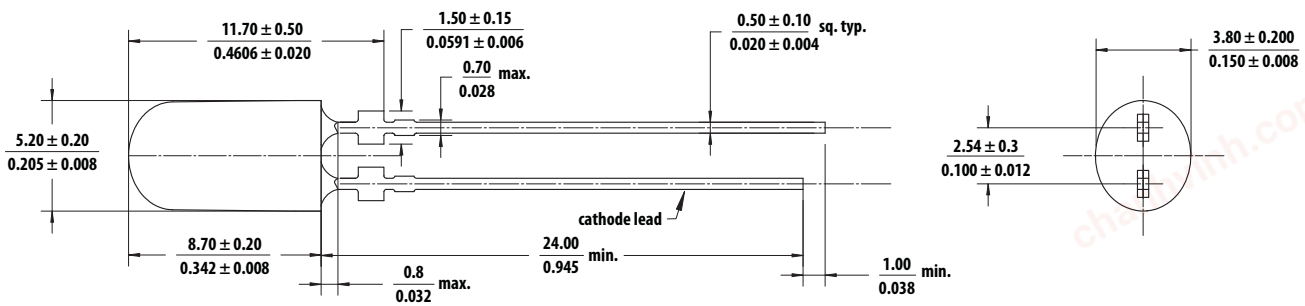

Notes:
All dimensions in millimeters (inches).

Caution: *INGaN devices are Class 1C HBM ESD sensitive per JEDEC Standard. Please observe appropriate precautions during handling and processing. Refer to Application Note AN – 1142 for additional details.*

chanhvinh.com

Device Selection Guide

Part Number	Color and Dominant Wavelength λd (nm) Typ	Luminous Intensity Iv (mcd) at 20 mA-Min	Luminous Intensity Iv (mcd) at 20 mA-Max	Standoff	Package Drawing
HLMP-AG64-X10xx	Red 626	1660	3500	No	A
HLMP-AG65-X10xx	Red 626	1660	3500	Yes	B
HLMP-AM64-140xx	Green 525	2900	6050	No	A
HLMP-AM65-140xx	Green 525	2900	6050	Yes	B
HLMP-AB64-TW0xx	Blue 470	800	1660	No	A
HLMP-AB65-TW0xx	Blue 470	800	1660	Yes	B

Tolerance for each intensity limit is ± 15%.

Notes:
1. The luminous intensity is measured on the mechanical axis of the lamp package.

Part Numbering System

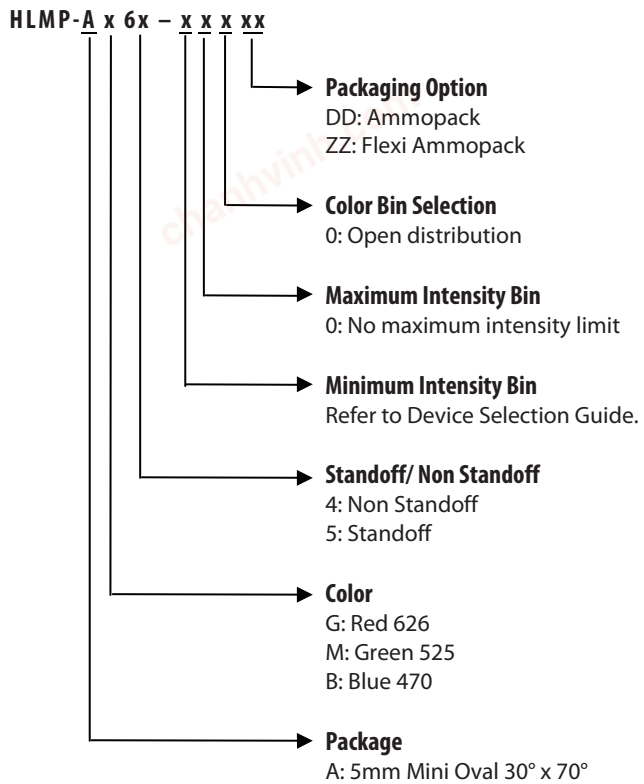

Note:
Please refer to AB 5337 for complete information about part numbering system.

chanhvinh.com

Absolute Maximum Ratings

T_A = 25°C

Parameter	Red	Green and Blue	Unit
DC Forward Current [1]	50	30	mA
Peak Forward Current	100 [2]	100 [3]	mA
Power Dissipation	120	116	mW
Reverse Voltage	5 (I_R = 100 µA)	5 (I_R = 10 µA)	V
LED Junction Temperature	130	110	°C
Operating Temperature Range	-40 to +100	-40 to +85	°C
Storage Temperature Range	-40 to +100	-40 to +100	°C

Notes:
1. Derate linearly as shown in Figure 4 and Figure 8
2. Duty Factor 30%, frequency 1KHz.
3. Duty Factor 10%, frequency 1KHz.

Electrical / Optical Characteristics

T_A = 25°C

Parameter	Symbol	Min.	Typ.	Max.	Units	Test Conditions
Forward Voltage	V_F				V	I_F = 20 mA
Red		1.8	2.1	2.4		
Green		2.8	3.2	3.8		
Blue		2.8	3.2	3.8		
Reverse Voltage	V_R				V	
Red		5				I_F = 100 µA
Green & blue		5				I_F = 10 µA
Dominant Wavelength [1]						
Red	λ_d	618	626	630	nm	I_F = 20 mA
Green		520	525	540		
Blue		460	470	480		
Peak Wavelength						
Red	λ_{PEAK}		634		nm	Peak of Wavelength of
Green			516			Spectral Distribution
Blue			464			at I_F = 20 mA
Thermal Resistance	$R\theta_{J\text{-}PIN}$		240		°C/W	LED Junction-to-Pin
Luminous Efficacy [2]						
Red	η_V		150		lm/W	Emitted Luminous Power/
Green			530			Emitted Radiant Power
Blue			65			

Notes:
1. The dominant wavelength is derived from the chromaticity Diagram and represents the color of the lamp
2. The radiant intensity, Ie in watts per steradian, may be found from the equation Ie = I_V/η_V where I_V is the luminous intensity in candelas and η_V is the luminous efficacy in lumens/watt.

chanhvinh.com

AlInGaP Red

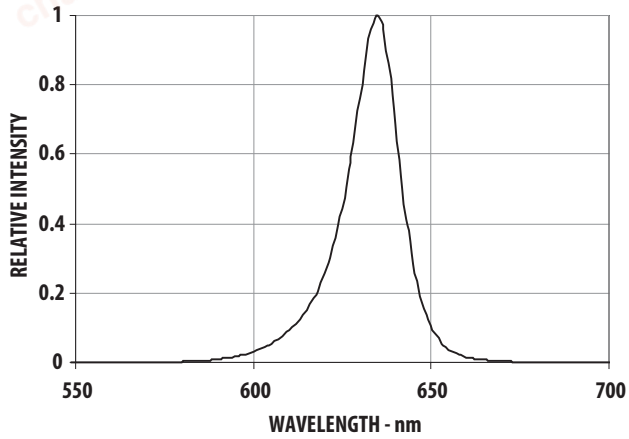

Figure 1. Relative Intensity vs Wavelength

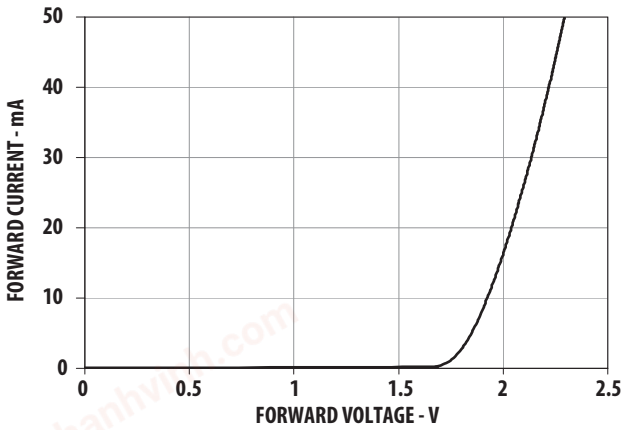

Figure 2. Forward Current vs Forward Voltage

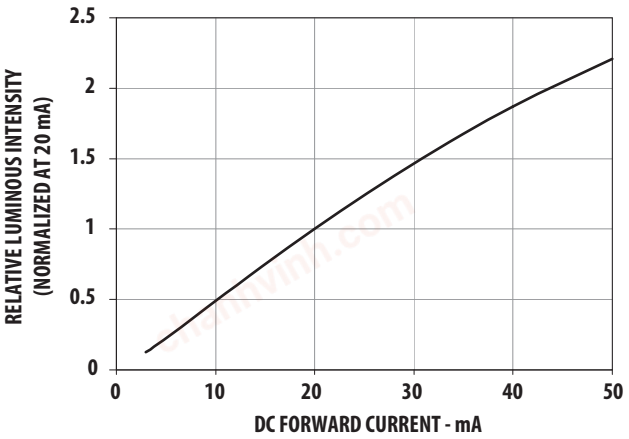

Figure 3. Relative Intensity vs Forward Current

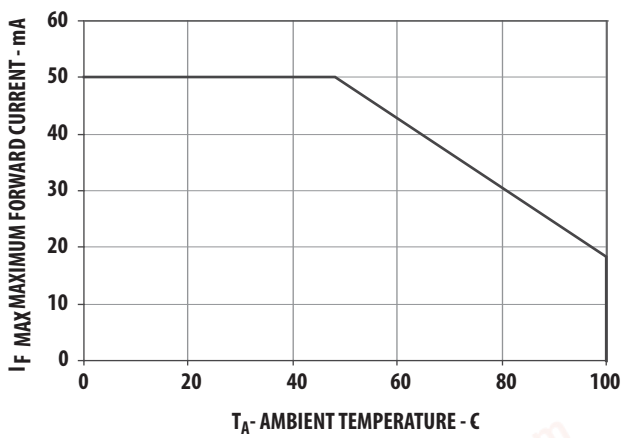

Figure 4. Maximum Forward Current vs Ambient Temperature

chanhvinh.com

InGaN Blue and Green

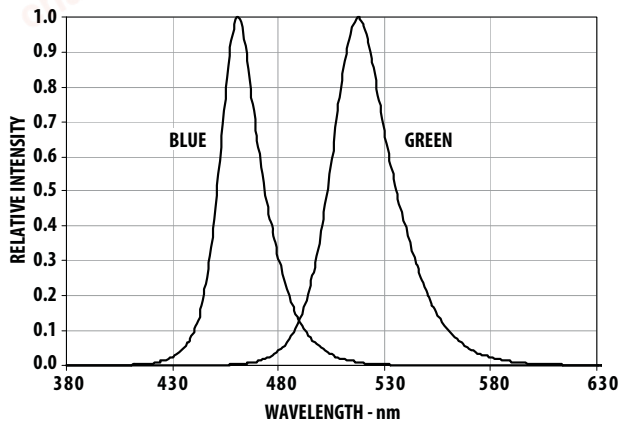

Figure 5. Relative Intensity vs Wavelength

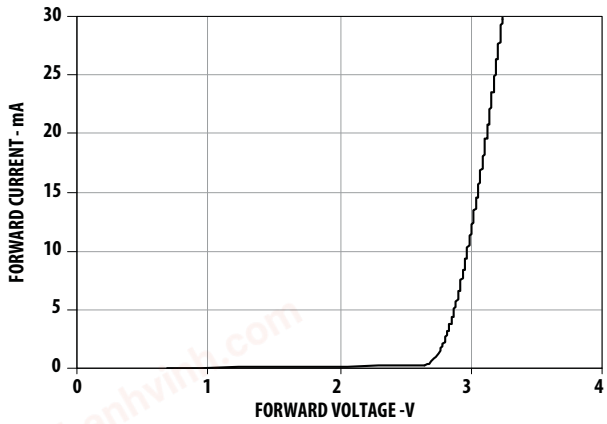

Figure 6. Forward Current vs Forward Voltage

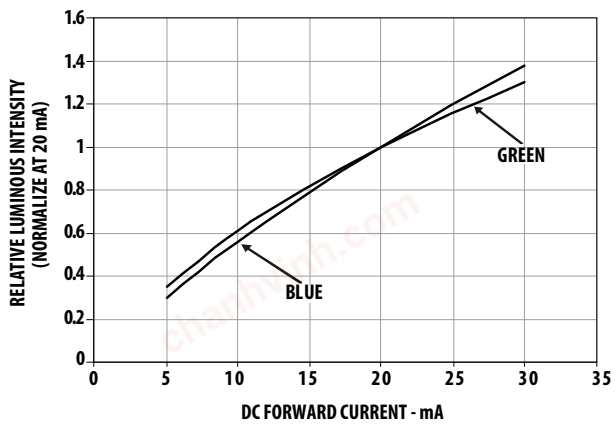

Figure 7. Relative Intensity vs Forward Current

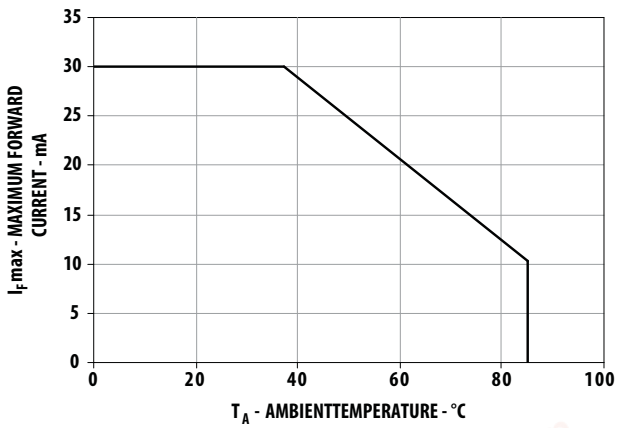

Figure 8. Maximum Forward Current vs Ambient Temperature

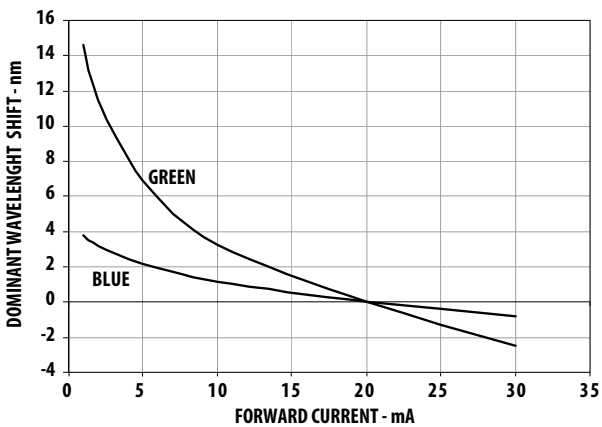

Figure 9. Relative dominant wavelength vs Forward Current

chanhvinh.com

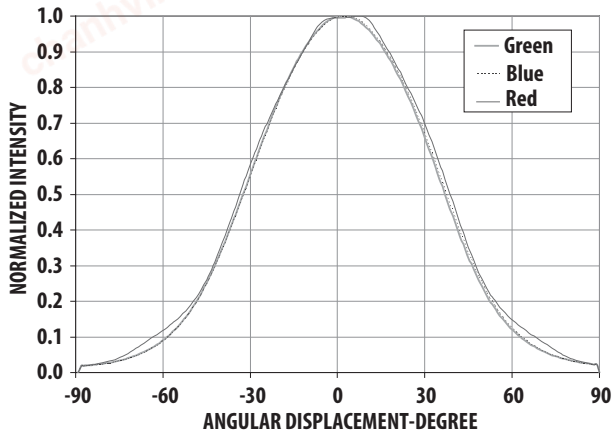

Figure 10. Radiation Pattern-Major Axis

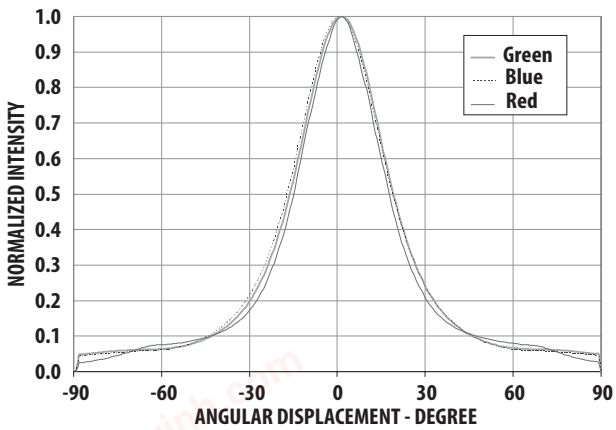

Figure 11. Radiation Pattern-Minor Axis

chanhvinh.com

Intensity Bin Limit Table (1.2: 1 Iv Bin Ratio)

	Intensity (mcd) at 20 mA	
Bin	Min	Max
T	800	960
U	960	1150
V	1150	1380
W	1380	1660
X	1660	1990
Y	1990	2400
Z	2400	2900
1	2900	3500
2	3500	4200
3	4200	5040
4	5040	6050

Tolerance for each bin limit is ± 15%

VF Bin Table (V at 20mA)

Bin ID	Min	Max
VD	1.8	2.0
VA	2.0	2.2
VB	2.2	2.4

Notes:
1. Tolerance for each bin limit is ±0.05V
2. VF binning only applicable to Red color.

Red Color Range

Min Dom	Max Dom	Xmin	Ymin	Xmax	Ymax
618	630	0.6872	0.3126	0.6890	0.2943
		0.6690	0.3149	0.7080	0.2920

Tolerance for each bin limit is ± 0.5nm

Green Color Bin Table

Bin	Min Dom	Max Dom	Xmin	Ymin	Xmax	Ymax
1	520.0	524.0	0.0743	0.8338	0.1856	0.6556
			0.1650	0.6586	0.1060	0.8292
2	524.0	528.0	0.1060	0.8292	0.2068	0.6463
			0.1856	0.6556	0.1387	0.8148
3	528.0	532.0	0.1387	0.8148	0.2273	0.6344
			0.2068	0.6463	0.1702	0.7965
4	532.0	536.0	0.1702	0.7965	0.2469	0.6213
			0.2273	0.6344	0.2003	0.7764
5	536.0	540.0	0.2003	0.7764	0.2659	0.6070
			0.2469	0.6213	0.2296	0.7543

Tolerance for each bin limit is ± 0.5nm.

Blue Color Bin Table

Bin	Min Dom	Max Dom	Xmin	Ymin	Xmax	Ymax
1	460.0	464.0	0.1440	0.0297	0.1766	0.0966
			0.1818	0.0904	0.1374	0.0374
2	464.0	468.0	0.1374	0.0374	0.1699	0.1062
			0.1766	0.0966	0.1291	0.0495
3	468.0	472.0	0.1291	0.0495	0.1616	0.1209
			0.1699	0.1062	0.1187	0.0671
4	472.0	476.0	0.1187	0.0671	0.1517	0.1423
			0.1616	0.1209	0.1063	0.0945
5	476.0	480.0	0.1063	0.0945	0.1397	0.1728
			0.1517	0.1423	0.0913	0.1327

Tolerance for each bin limit is ± 0.5nm

Note:
1. All bin categories are established for classification of products. Products may not be available in all bin categories. Please contact your Avago representative for further information.

chanhvinh.com

Relative Light Output vs Junction Temperature

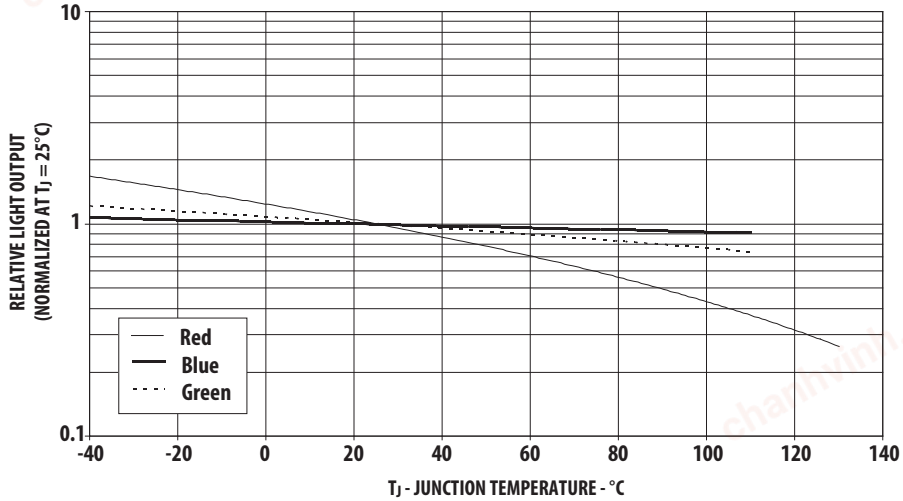

Avago Color Bin on CIE 1931 Chromaticity Diagram

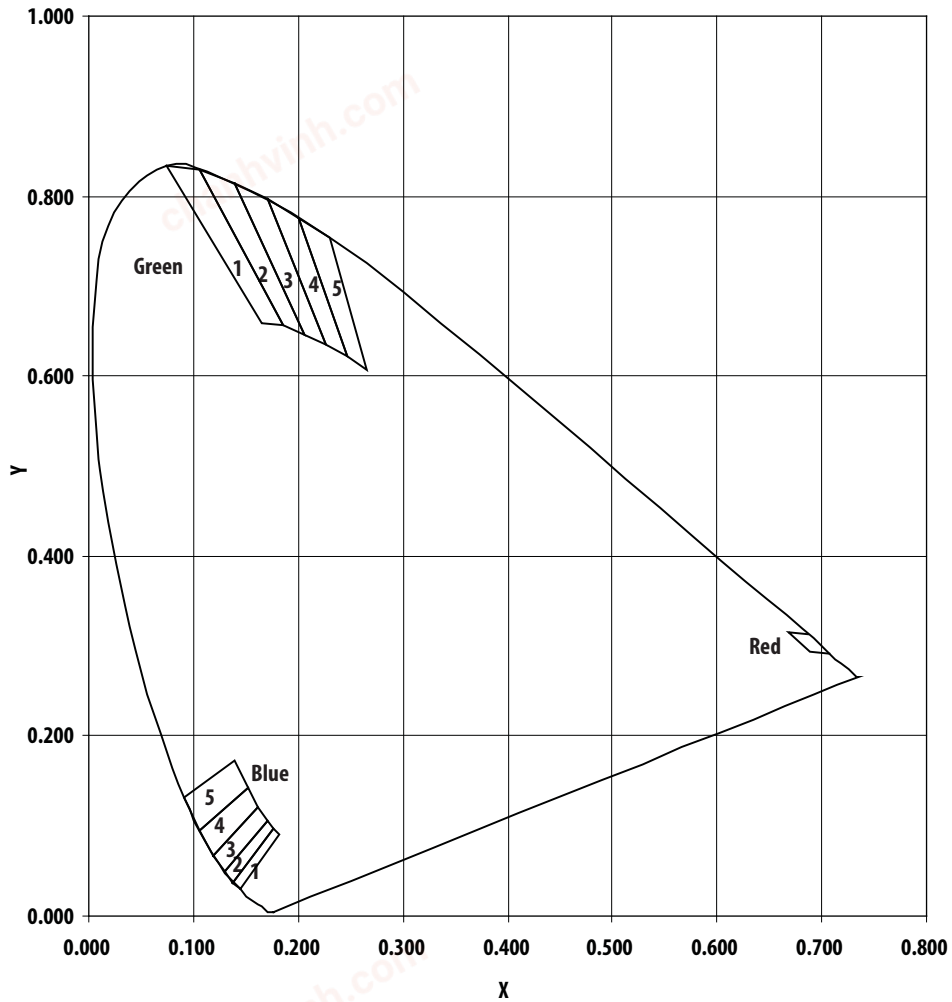

chanhvinh.com

Precautions:

Lead Forming:

- The leads of an LED lamp may be preformed or cut to length prior to insertion and soldering on PC board.
- For better control, it is recommended to use proper tool to precisely form and cut the leads to applicable length rather than doing it manually.
- If manual lead cutting is necessary, cut the leads after the soldering process. The solder connection forms a mechanical ground which prevents mechanical stress due to lead cutting from traveling into LED package. This is highly recommended for hand solder operation, as the excess lead length also acts as small heat sink.

Soldering and Handling:

- Care must be taken during PCB assembly and soldering process to prevent damage to the LED component.
- LED component may be effectively hand soldered to PCB. However, it is only recommended under unavoidable circumstances such as rework. The closest manual soldering distance of the soldering heat source (soldering iron's tip) to the body is 1.59mm. Soldering the LED using soldering iron tip closer than 1.59mm might damage the LED.

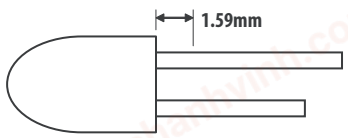

- ESD precaution must be properly applied on the soldering station and personnel to prevent ESD damage to the LED component that is ESD sensitive. Do refer to Avago application note AN 1142 for details. The soldering iron used should have grounded tip to ensure electrostatic charge is properly grounded.
- Recommended soldering condition:

	Wave Soldering [1, 2]	Manual Solder Dipping
Pre-heat temperature	105 °C Max.	-
Preheat time	60 sec Max	-
Peak temperature	260 °C Max.	260 °C Max.
Dwell time	5 sec Max.	5 sec Max

Note:
1. Above conditions refers to measurement with thermocouple mounted at the bottom of PCB.
2. It is recommended to use only bottom preheaters in order to reduce thermal stress experienced by LED.

- Wave soldering parameters must be set and maintained according to the recommended temperature and dwell time. Customer is advised to perform daily check on the soldering profile to ensure that it is always conforming to recommended soldering conditions.

Note:
1. PCB with different size and design (component density) will have different heat mass (heat capacity). This might cause a change in temperature experienced by the board if same wave soldering setting is used. So, it is recommended to re-calibrate the soldering profile again before loading a new type of PCB.
2. Avago Technologies' AlInGaP high brightness LED are using high efficiency LED die with single wire bond as shown below. Customer is advised to take extra precaution during wave soldering to ensure that the maximum wave temperature does not exceed 260°C and the solder contact time does not exceeding 5sec. Over-stressing the LED during soldering process might cause premature failure to the LED due to delamination.

Avago Technologies LED configuration

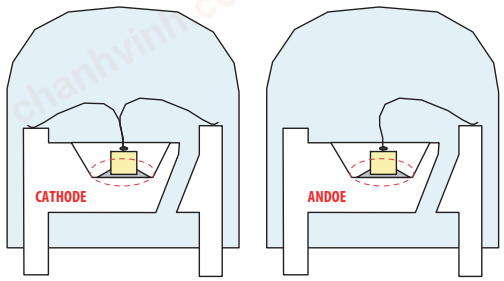

Note: Electrical connection between bottom surface of LED die and the lead frame is achieved through conductive paste.

- Any alignment fixture that is being applied during wave soldering should be loosely fitted and should not apply weight or force on LED. Non metal material is recommended as it will absorb less heat during wave soldering process.
- At elevated temperature, LED is more susceptible to mechanical stress. Therefore, PCB must allowed to cool down to room temperature prior to handling, which includes removal of alignment fixture or pallet.
- If PCB board contains both through hole (TH) LED and other surface mount components, it is recommended that surface mount components be soldered on the top side of the PCB. If surface mount need to be on the bottom side, these components should be soldered using reflow soldering prior to insertion the TH LED.
- Recommended PC board plated through holes (PTH) size for LED component leads.

LED component lead size	Diagonal	Plated through hole diameter
0.45 x 0.45 mm (0.018x 0.018 inch)	0.636 mm (0.025 inch)	0.98 to 1.08 mm (0.039 to 0.043 inch)
0.50 x 0.50 mm (0.020x 0.020 inch)	0.707 mm (0.028 inch)	1.05 to 1.15 mm (0.041 to 0.045 inch)

- Over-sizing the PTH can lead to twisted LED after clinching. On the other hand under sizing the PTH can cause difficulty inserting the TH LED.

Refer to Application Note 5334 for more information about soldering and handling of high brightness TH LED lamps.

Example of Wave Soldering Temperature Profile for TH LED

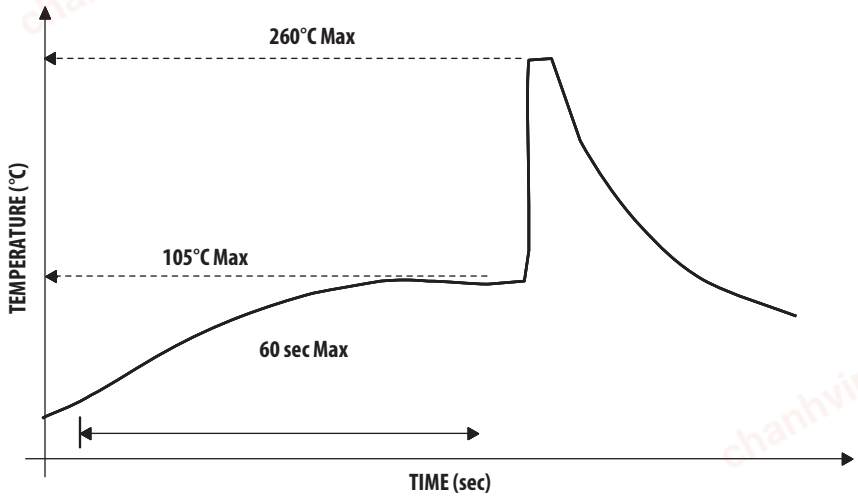

Recommended solder:
Sn63 (Leaded solder alloy)
SAC305 (Lead free solder alloy)

Flux: Rosin flux

Solder bath temperature: 255°C ± 5°C
(maximum peak temperature = 260°C)

Dwell time: 3.0 sec - 5.0 sec
(maximum = 5sec)

Note: Allow for board to be sufficiently cooled to room temperature before exerting mechanical force.

Ammo Packs Drawing

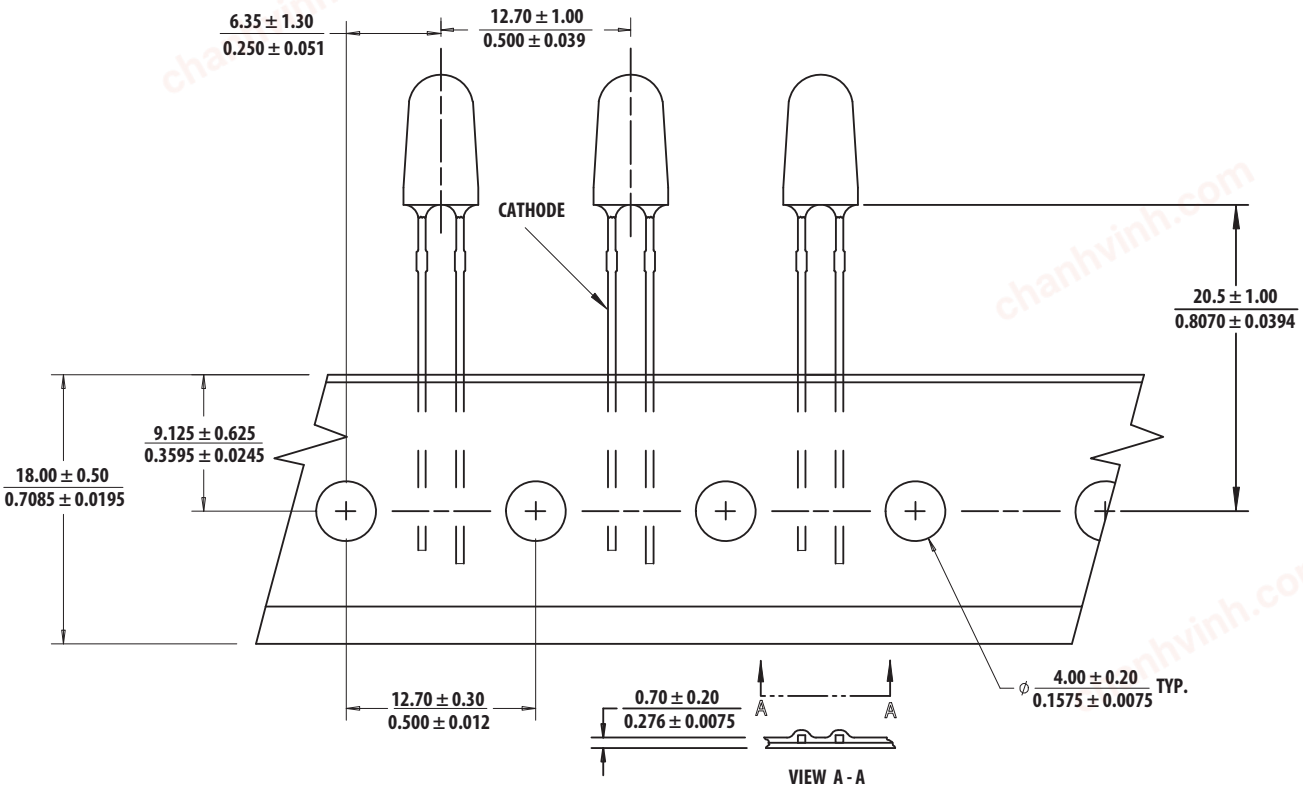

Note: All dimensions in millimeters (inches)

chanhvinh.com

Packaging Box for Ammo Packs

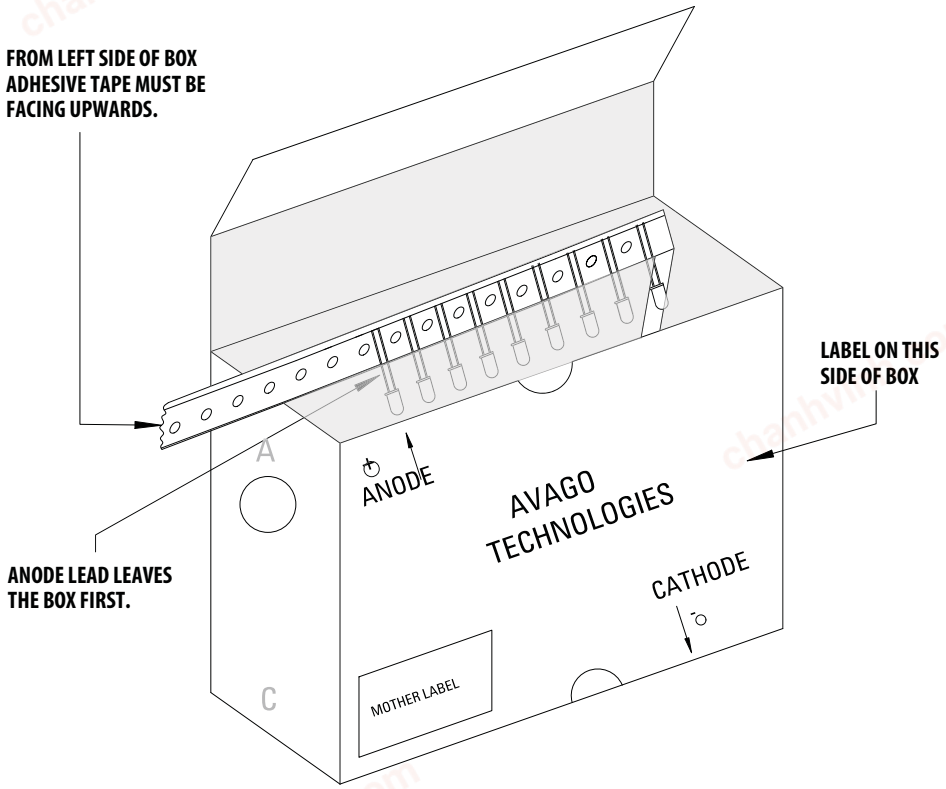

Note: For InGaN device, the ammo pack packaging box contain ESD logo

Packaging Label

(i) Avago Mother Label: (Available on packaging box of ammo pack and shipping box)

AVAGO TECHNOLOGIES

(1P) Item: Part Number

STANDARD LABEL LS0002
RoHS Compliant
e3 max temp 260C

(1T) Lot: Lot Number

(Q) QTY: Quantity

LPN:

CAT: Intensity Bin

(9D)MFG Date: Manufacturing Date

BIN: Refer to below information

(P) Customer Item:

(V) Vendor ID:

(9D) Date Code: Date Code

DeptID:

Made In: Country of Origin

chanhvinh.com

(ii) Avago Baby Label (Only available on bulk packaging)

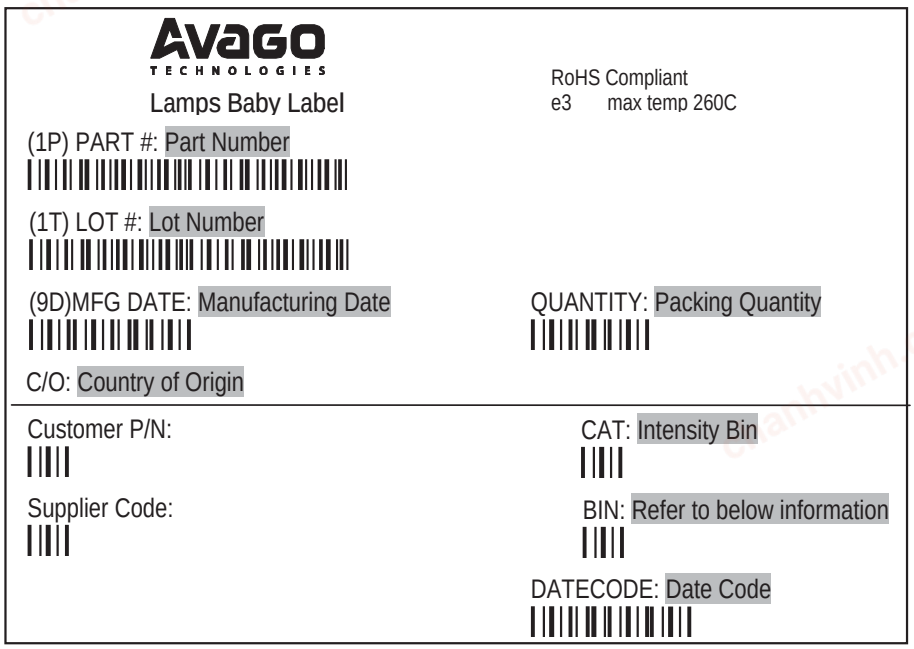

Acronyms and Definition:

BIN:

(i) Color bin only or VF bin only (Applicable for part number with color bins but without VF bin OR part number with VF bins and no color bin)

OR

(ii) Color bin incorporated with VF Bin (Applicable for part number that have both color bin and VF bin)

Example:

(i) Color bin only or VF bin only
BIN: 2 (represent color bin 2 only)
BIN: VB (represent VF bin "VB" only)

(ii) Color bin incorporate with VF Bin

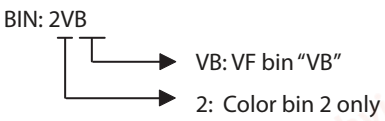

DISCLAIMER: *AVAGO'S PRODUCTS AND SOFTWARE ARE NOT SPECIFICALLY DESIGNED, MANUFACTURED OR AUTHORIZED FOR SALE AS PARTS, COMPONENTS OR ASSEMBLIES FOR THE PLANNING, CONSTRUCTION, MAINTENANCE OR DIRECT OPERATION OF A NUCLEAR FACILITY OR FOR USE IN MEDICAL DEVICES OR APPLICATIONS. CUSTOMER IS SOLELY RESPONSIBLE, AND WAIVES ALL RIGHTS TO MAKE CLAIMS AGAINST AVAGO OR ITS SUPPLIERS, FOR ALL LOSS, DAMAGE, EXPENSE OR LIABILITY IN CONNECTION WITH SUCH USE.*

For product information and a complete list of distributors, please go to our web site: **www.avagotech.com**

Avago, Avago Technologies, and the A logo are trademarks of Avago Technologies in the United States and other countries.
Data subject to change. Copyright © 2005-2011 Avago Technologies. All rights reserved.
AV02-1510EN - April 18, 2011