chanhvinh.com

BROADCOM®

Data Sheet

HLMP-3707, HLMP-3907, HLMP-3750, HLMP-3850, HLMP-3950, HLMP-3960, HLMP-3390, HLMP-3490, HLMP-3590, HLMP-1340, HLMP-1440, HLMP-1540, HLMP-K640

T-1 3/4 (5 mm), T-1 (3 mm), Ultra-Bright LED Lamps



Description

These non-diffused lamps out-perform conventional LED lamps. By using new higher intensity material, superior product performance is achived.

The HLMP-3750/3390/1340 Series Lamps are Gallium Arsenide Phosphide on Gallium Phosphide red light emitting diodes. The HLMP-3850/3490/1440 Series are Gallium Arsenide Phosphide on Gallium Phosphide yellow light emitting diodes. The HLMP-3950/3590/3960/1540/K640 Series Lamps are Gallium Phosphide green light emitting diodes.

Features

- Improved brightness
- Improved color performance
- Available in popular T-1 and T-1 3/4 packages
- New sturdy leads
- IC compatible/low current capability
- Reliable and rugged
- Choice of three bright colors
  - High Efficiency Red
  - High Brightness Yellow
  - High Performance Green

Applications

- Lighted switches
- Backlighting front panels
- Light pipe sources
- Keyboard indicators

chanhvinh.com

Package Dimensions

Figure 1: Package Outline "A" HLMP-3750/3850/3950

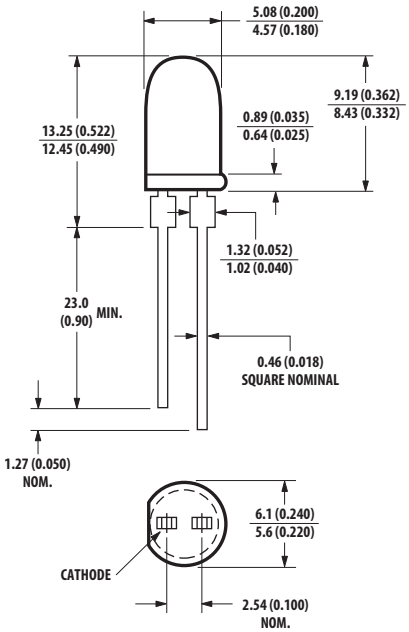

Figure 2: Package Outline "B" HLMP-3390/3490/3590

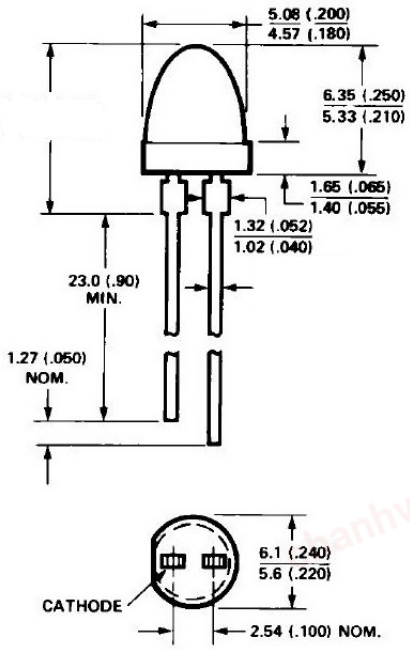

Figure 3: Package Outline "C" HLMP-1340/1440/1540

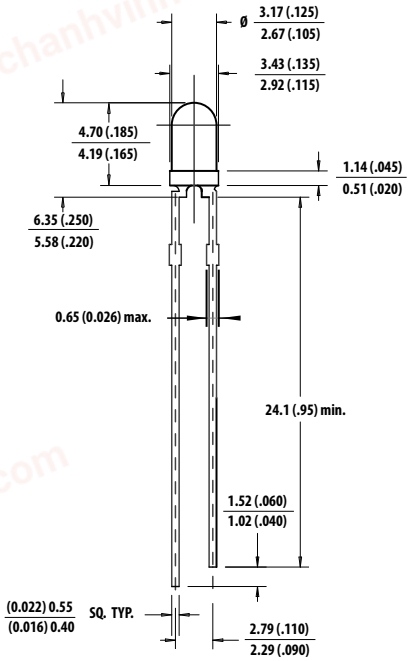

NOTE:

1. All dimensions are in millimeters (inches).
2. An epoxy meniscus may extend about 1 mm (0.40 in.) down the leads.
3. For PCB hole recommendations, see Precautions.

chanhvinh.com

Figure 4: Package Outline "D" HLMP-3914

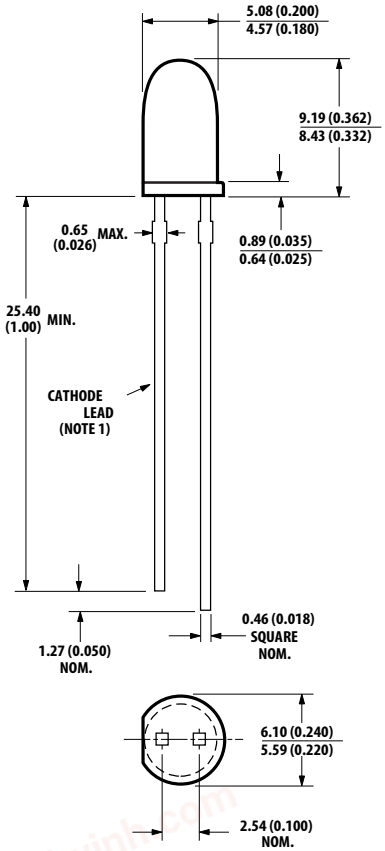

Figure 5: Package Outline "E" HLMP-3960

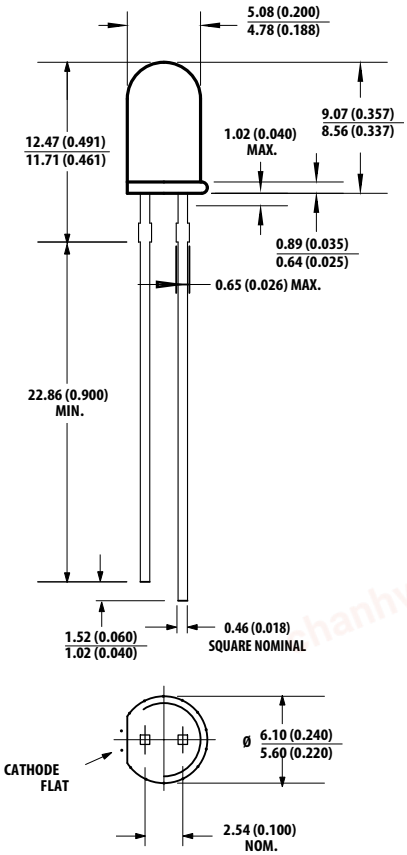

Figure 6: Package Outline "F" HLMP-3707/3907

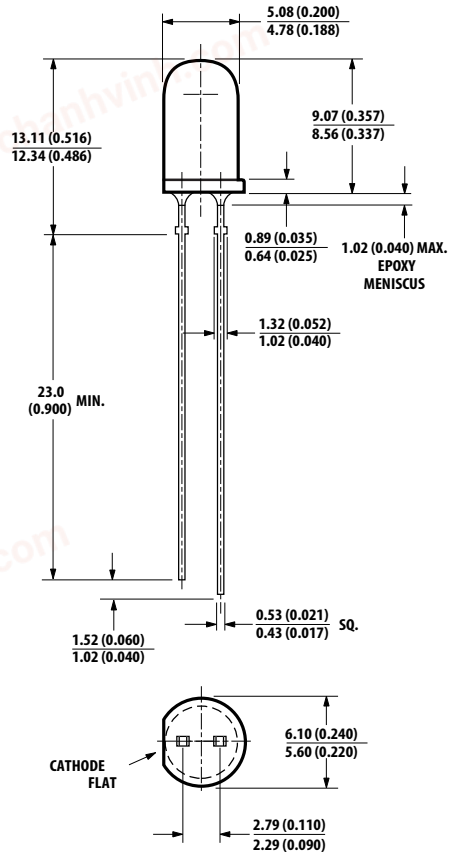

NOTE:

1. All dimensions are in millimeters (inches).
2. An epoxy meniscus may extend about 1 mm (0.40 in.) down the leads.
3. For PCB hole recommendations, see Precautions.

chanhvinh.com

Selection Guide

Package Description	Color	Device HLMP-	Luminous Intensity Iv (mcd) @ 20 mA			$2\theta_{1/2}$ Degree	Package Outline
			Min.	Typ.	Max.		
T-1 3/4	Red	3707-L00xx	90.2	—	—	24	F
		3750	90.2	125.0	—	24	A
		3750-L00xx	90.2	125.0	—	24	A
	Yellow	3850	96.2	140.0	—	24	A
		3850-K00xx	96.2	140.0	—	24	A
	Green	3907-K00xx	111.7	—	—	24	F
		3914	111.7	—	—	24	D
		3950	111.7	265.0	—	24	A
		3950-K00xx	111.7	265.0	—	24	A
		3950-LM000	170.0	300.0	490.0	24	A
		3960-K0xxx	111.7	265.0	—	24	E
		3950-MNC00	245.0	490.0	760.0	24	A
T-1 3/4 Low Profile	Red	3390	35.2	55.0	—	32	B
	Yellow	3490	37.6	55.0	—	32	B
	Green	3590	43.6	55.0	—	32	B
T-1	Red	1340	35.2	55.0	—	45	C
		1340-J00xx	35.2	55.0	—	45	C
	Yellow	1440	23.5	45.0	—	45	C
		1440-H00xx	23.5	45.0	—	45	C
		1440-HJ000	23.5	45.0	120.2	45	C
		1440-IJB00	37.6	75.0	120.2	45	C
	Green	1540	27.3	45.0	—	45	C
		1540-H00xx	27.3	45.0	—	45	C
		1540-IJ000	43.6	60.0	139.6	45	C
	Emerald Green	K640	4.2	21.0	—	45	C

Absolute Maximum Ratings at T_A = 25°C

Parameter	Red	Yellow	Green/Emerald Green	Units
Peak Forward Current	90	60	90	mA
Average Forward Current[a]	25	20	25	mA
DC Current[b]	30	20	30	mA
Transient Forward Current[c] (10-µs Pulse)	500	500	500	mA
Reverse Voltage (I_R = 100 µA)	5	5	5	V
LED Junction Temperature	110	110	110	°C
Operating Temperature Range	–40 to +100	–40 to +100	–20 to +100	°C
Storage Temperature Range	–40 to +100	–40 to +100	–40 to +100	°C

a. See Figure 8 to establish pulsed operating conditions.

b. For Red and Green series derate linearly from 50°C at 0.5 mA/°C. For Yellow series derate linearly from 50°C at 0.2 mA/°C.

c. The transient peak current is the maximum non-recurring peak current the devices can withstand without damaging the LED die and wire bonds. It is not recommended that the device be operated at peak currents beyond the Absolute Maximum Peak Forward Current.

chanhvinh.com

Electrical/Optical Characteristics at T_A = 25°C

Parameter	Symbol	T-1 3/4	T-1 -3/4 Low Dome	T-1	Min.	Typ.	Max.	Units	Test Conditions
Peak Wavelength	λ_{PEAK}	37xx	3390	1340	—	635	—	nm	Measurement at Peak
		38xx	3490	1440	—	583	—		
		39xx	3590	1540	—	565	—		
				K640	—	558	—		
Dominant Wavelength	λ_d	37xx	3390	1340	—	626	—	nm	Note [a]
		38xx	3490	1440	—	585	—		
		39xx	3590	1540	—	569	—		
				K640	—	560	—		
Spectral Line Halfwidth	$\Delta\lambda^3/_4$	37xx	3390	1340	—	40	—	nm	
		38xx	3490	1440	—	36	—		
		39xx	3590	1540	—	28	—		
				K640	—	24	—		
Speed of Respond	τ_s	37xx	3390	1340	—	90	—	ns	
		38xx	3490	1440	—	90	—		
		39xx	3590	1540	—	500	—		
				K640	—	3100	—		
Capacitance	C	37xx	3390	1340	—	11	—	pF	V_F = 0, f = 1 MHz
		38xx	3490	1440	—	15	—		
		39xx	3590	1540	—	18	—		
				K640	—	35	—		
Thermal Resistance	$R\theta_{J\text{-}PIN}$	37xx	3390		—	210	—	°C/W	Junction to Cathode Lead
		38xx	3490		—	210	—		
		39xx	3590		—	210	—		
					—	510	—		
				1340	—	290	—		
				1440	—	290	—		
				1540	—	290	—		
				K640	—	290	—		
Forward Voltage	V_F	37xx	3390	1340	1.5	1.9	2.6	V	I_F = 20 mA
		38xx	3490	1440	1.5	2.1	2.6		
		39xx	3590	1540	1.5	2.2	3.0		
				K640	—	2.2	3.0		
Reverse Breakdown Voltage	V_R	37xx	3390	1340	5.0	—	—	V	I_R = 100 µA
		38xx	3490	1440	—	—	—		
		39xx	3590	1540	—	—	—		
				K640	—	—	—		
Luminous Efficacy	η_v	37xx	3390	1340	—	145	—	lumens/watt	Note [b]
		38xx	3490	1440	—	500	—		
		39xx	3590	1540	—	595	—		
				K640	—	655	—		

a. The dominant wavelength, λ_d, is derived from the CIE chromaticity diagram and represents the single wavelength which defines the color of the device.

b. The radiant intensity, Ie, in watts per steradian, may be found from the equation Ie = IV/η_V , where IV is the luminous intensity in candelas and η_V is the luminous efficacy in lumens/watt.

chanhvinh.com

Part Numbering System

H L M P - x_1 x_2 x_3 x_4 - x_5 x_6 x_7 x_8 x_9

Code	Description	Option	
x_1	Package Type	1	T-1 (3 mm)
		K	T-1 (3 mm)
		3	T-1 3/4 (5 mm)
x_2	**Color**	3, 7	Gap HER
		4, 8	GaP Yellow (except K4xx series)
		5, 9	Gap Green
		6	GaP Emerald Green
x_3x_4	Product Specific Designation	—	
x_5	Minimum Intensity Bin	See Intensity Bin Limits	
x_6	Maximum Intensity Bin		
	Maximum Iv Bin	0	Open (no maximum limit)
		Others	Refer to the Iv Bin Table
x_7	Color Bin Selection	0	Full range
		B	Color bin 2 and 3 only
		C	Color bin 3 and 4 only
x_8x_9	Packaging Option	00	Bulk packaging
		01	Tape and reel, crimped leads
		02	Tape and reel, straight leads
		A1	Right angle housing, uneven leads
		A2, B2	Right angle housing, even leads

chanhvinh.com

Intensity Bin Limits

Color	Bin	Intensity Range (mcd)	
		Min.	Max.
Red	G	9.7	15.5
	H	15.5	24.8
	I	24.8	39.6
	J	39.6	63.4
	K	63.4	101.5
	L	101.5	162.4
	M	162.4	234.6
	N	234.6	340.0
	O	340.0	540.0
	P	540.0	850.0
	Q	850.0	1200.0
	R	1200.0	1700.0
	S	1700.0	2400.0
	T	2400.0	3400.0
	U	3400.0	4900.0
	V	4900.0	7100.0
	W	7100.0	10200.0
	X	10200.0	14800.0
	Y	14800.0	21400.0
	Z	21400.0	30900.0
Yellow	F	10.3	16.6
	G	16.6	26.5
	H	26.5	42.3
	I	42.3	67.7
	J	67.7	108.2
	K	108.2	173.2
	L	173.2	250.0
	M	250.0	360.0
	N	360.0	510.0
	O	510.0	800.0
	P	800.0	1250.0
	Q	1250.0	1800.0
	R	1800.0	2900.0
	S	2900.0	4700.0
	T	4700.0	7200.0
	U	7200.0	11700.0
	V	11700.0	18000.0
	W	18000.0	27000.0

Color	Bin	Intensity Range (mcd)	
		Min.	Max.
Green/ Emerald Green	A	1.1	1.8
	B	1.8	2.9
	C	2.9	4.7
	D	4.7	7.6
	E	7.6	12.0
	F	12.0	19.1
	G	19.1	30.7
	H	30.7	49.1
	I	49.1	78.5
	J	78.5	125.7
	K	125.7	201.1
	L	201.1	289.0
	M	289.0	417.0
	N	417.0	680.0
	O	680.0	1100.0
	P	1100.0	1800.0
	Q	1800.0	2700.0
	R	2700.0	4300.0
	S	4300.0	6800.0
	T	6800.0	10800.0
	U	10800.0	16000.0
	V	16000.0	25000.0
	W	25000.0	40000.0

Maximum tolerance for each bin limit is ± 18%.

chanhvinh.com

Color Categories

Color	Cat #	Lambda (nm)	
		Min.	Max.
Emerald Green	9	552.5	555.5
	8	555.5	558.5
	7	558.5	561.5
	6	561.5	564.5
Green	6	561.5	564.5
	5	564.5	567.5
	4	567.5	570.5
	3	570.5	573.5
	2	573.5	576.5
Yellow	1	582.0	584.5
	3	584.5	587.0
	2	587.0	589.5
	4	589.5	592.0
	5	592.0	593.0

Color	Cat #	Lambda (nm)	
		Min.	Max.
Orange	1	597.0	599.5
	2	599.5	602.0
	3	602.0	604.5
	4	604.5	607.5
	5	607.5	610.5
	6	610.5	613.5
	7	613.5	616.5
	8	616.5	619.5

Packaging Option Matrix

Packaging Option Code	Definition
00	Bulk Packaging, minimum increment 500 pcs/bag
01	Tape and Reel, crimped leads, min. increment 1300 pcs/bag for T-1 3/4, 1800 pcs/bag for T-1
02	Tape and Reel, straight leads, min. increment 1300 pcs/bag for T-1 3/4, 1800 pcs/bag for T-1
A1	T-1, Right Angle Housing, uneven leads, minimum increment 500 pcs/bag
A2	T-1, Right Angle Housing, even leads, minimum increment 500 psc/bag
B2	T-1 3/4, Right Angle Housing, even leads, minimum increment 500 psc/bag

NOTE: All categories are established for classification of products. Products may not be available in all categories. Please contact your local Broadcom representative for further clarification and information.

chanhvinh.com

Red, Yellow, and Green

Figure 7: Relative Intensity vs. Wavelength

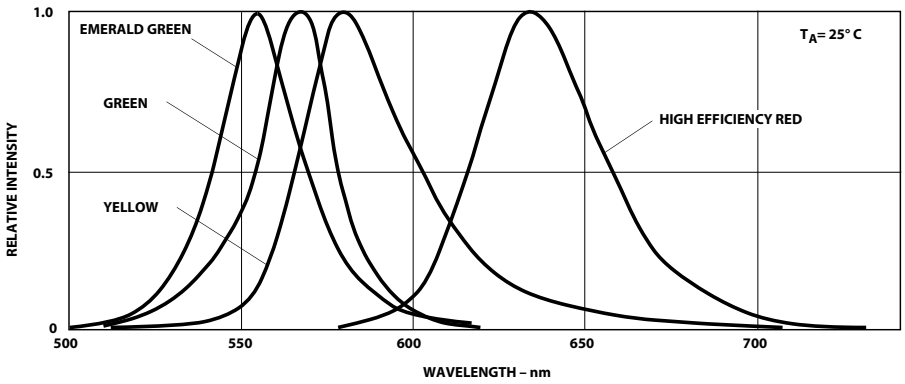

Figure 8: Maximum Tolerable Peak Current vs. Pulse Duration (I_{DC} MAX as per MAX Ratings)

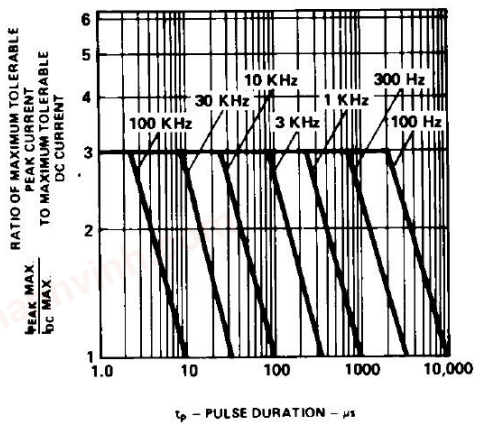

Figure 9: Forward Current vs. Forward Voltage

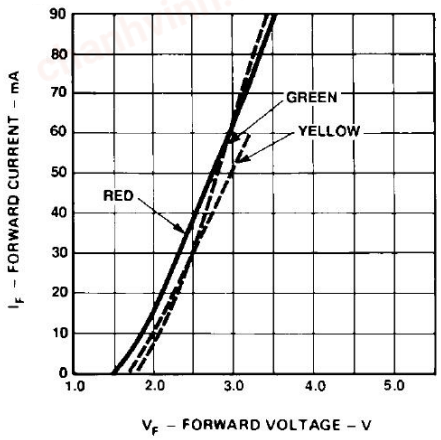

Figure 10: Relative Luminous Intensity vs. Forward Current

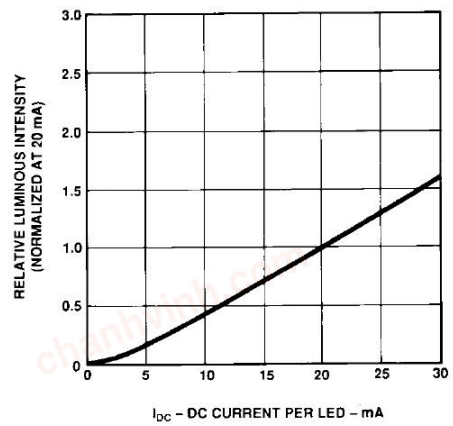

Figure 11: Relative Efficiency (Luminous Intensity per Unit Current) vs. Peak Current

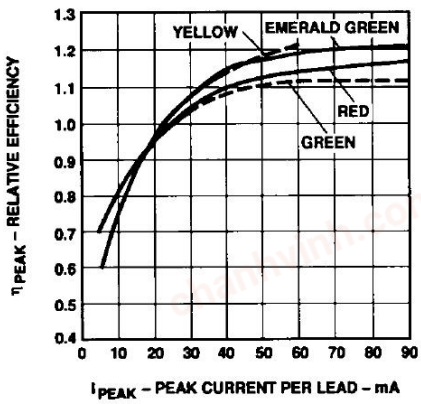

chanhvinh.com

Figure 12: Relative Luminous Intensity vs. Angular Displacement, T-1 3/4 Lamp

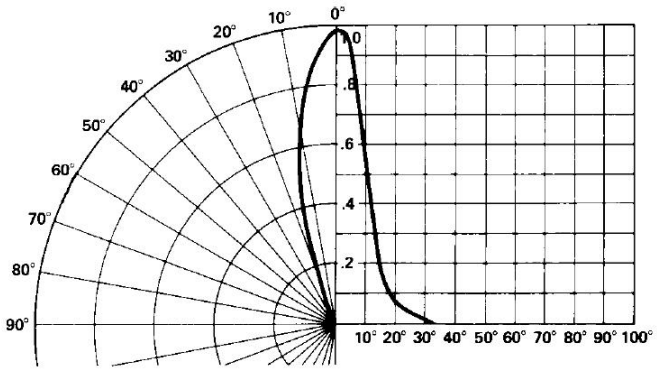

Figure 13: Relative Luminous Intensity vs. Angular Displacement, T-1 3/4 Low Profile Lamp

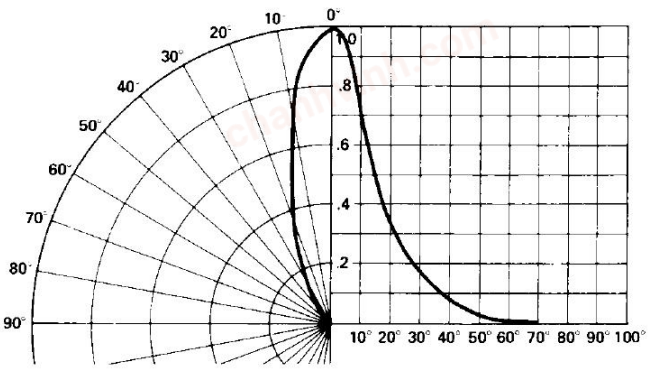

Figure 14: Relative Luminous Intensity vs. Angular Displacement, T-1 Lamp

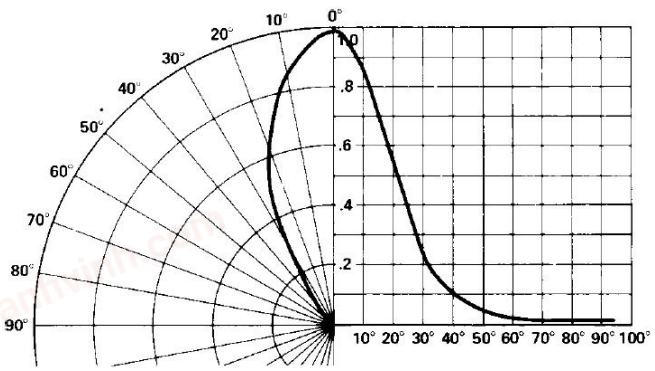

chanhvinh.com

Packaging Label

Broadcom Mother Label

Available on packaging box of ammo pack and shipping box.



chanhvinh.com

Broadcom Baby Label

Only available on bulk packaging.

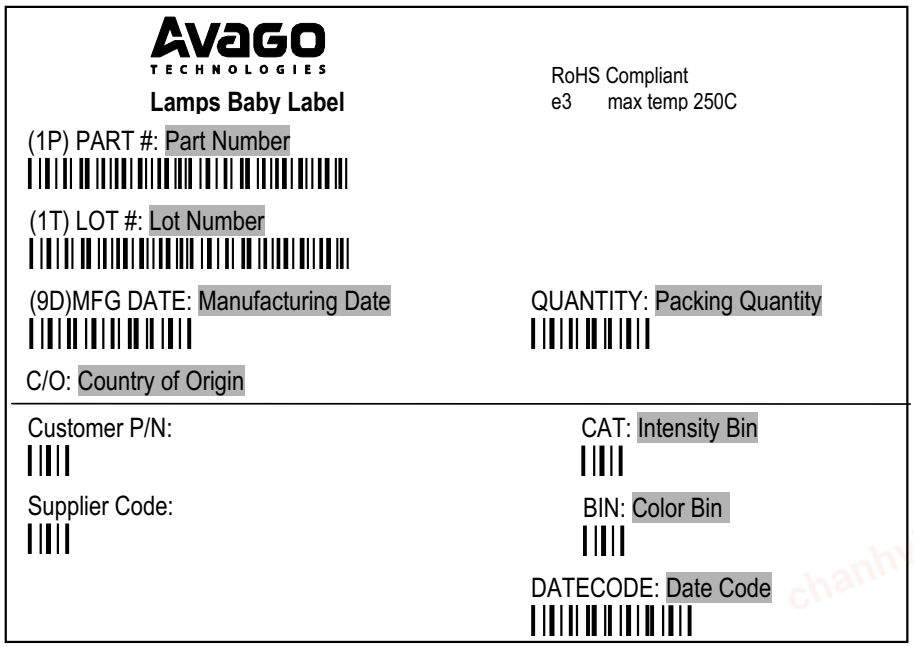

chanhvinh.com

Precautions

Lead Forming

- Preform or cut the leads of an LED lamp to length prior to insertion and soldering on PC board.
- For better control, use proper tool to precisely form and cut the leads to applicable length rather than doing it manually.
- If manual lead cutting is necessary, cut the leads after the soldering process. The solder connection forms a mechanical ground that prevents mechanical stress due to lead cutting from traveling into LED package. This is highly recommended for hand solder operation, as the excess lead length also acts as small heat sink.

Soldering and Handling

- Take care during PCB assembly and soldering process to prevent damage to the LED component.
- The LED component may be effectively hand soldered to PCB. However, it is only recommended under unavoidable circumstances, such as rework. The closest manual soldering distance of the soldering heat source (soldering iron's tip) to the body is 1.59 mm. Soldering the LED using soldering iron tip closer than 1.59 mm might damage the LED.

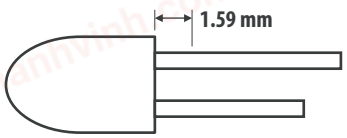

- Apply proper ESD precaution on the soldering station and by personnel to prevent ESD damage to the LED component that is ESD sensitive. For details, refer to Broadcom application note AN 1142. The soldering iron used should have a grounded tip to ensure electrostatic charge is properly grounded.
- Recommended soldering conditions follow.

	Wave Soldering[a, b]	Manual Solder Dipping
Pre-heat Temperature	105°C Max.	—
Pre-heat Time	60 sec Max.	—
Peak Temperature	250°C Max.	260°C Max.
Dwell Time	3 sec Max.	5 sec Max.

a. These conditions refer to measurement with a thermocouple mounted at the bottom of PCB.

b. To reduce thermal stress experienced by the LED, it is recommended that you use only the bottom preheaters.

- Set and maintain wave soldering parameters according to the recommended temperature and dwell time. Perform daily checks on the soldering profile to ensure that it is always conforming to recommended soldering conditions.

NOTE:

- PCBs with different size and design (component density) will have different heat mass (heat capacity). This might cause a change in temperature experienced by the board if same wave soldering setting is used. So, you should recalibrate the soldering profile again before loading a new type of PCB.
- Take extra precautions during wave soldering to ensure that the maximum wave temperature does not exceed 250°C and the solder contact time does not exceeding 3s. Over-stressing the LED during soldering process might cause premature failure to the LED due to delamination.

- Any alignment fixture that is being applied during wave soldering should be loosely fitted and should not apply weight or force on the LED. Nonmetal material is recommended as it will absorb less heat during wave soldering process.
- At elevated temperature, the LED is more susceptible to mechanical stress. Therefore, PCB must allowed to cool down to room temperature prior to handling, which includes removal of alignment fixture or pallet.
- If PCB board contains both through hole (TH) LED and other surface mount components, solder surface-mount components on the top side of the PCB. If surface-mount must be on the bottom side, solder these components using reflow soldering prior to insertion the TH LED.
- Recommended PC board plated through holes (PTH) size for LED component leads:

	LED Component Lead Size	Diagonal	Plated Through-Hole Diameter
Lead size (typ.)	0.45 × 0.45 mm (0.018 × 0.018 in.)	0.636 mm (0.025 in.)	0.98 to 1.08 mm (0.039 to 0.043 in.)
Dambar shear-off area (max.)	0.65 mm (0.026 in.)	0.919 mm (0.036 in.)	
Lead size (typ.)	0.50 × 0.50 mm (0.020 × 0.020 in.)	0.707 mm (0.028 in.)	1.05 to 1.15 mm (0.041 to 0.045 in.)
Dambar shear-off area (max.)	0.70 mm (0.028 in.)	0.99 mm (0.039 in.)	

- Over-sizing the PTH can lead to a twisted LED after it is clinched. On the other hand, undersizing the PTH can make inserting the TH LED difficult.

For more information about soldering and handling of TH LED lamps, refer to application note AN5334.

chanhvinh.com

Example of Wave Soldering Temperature Profile for TH LED

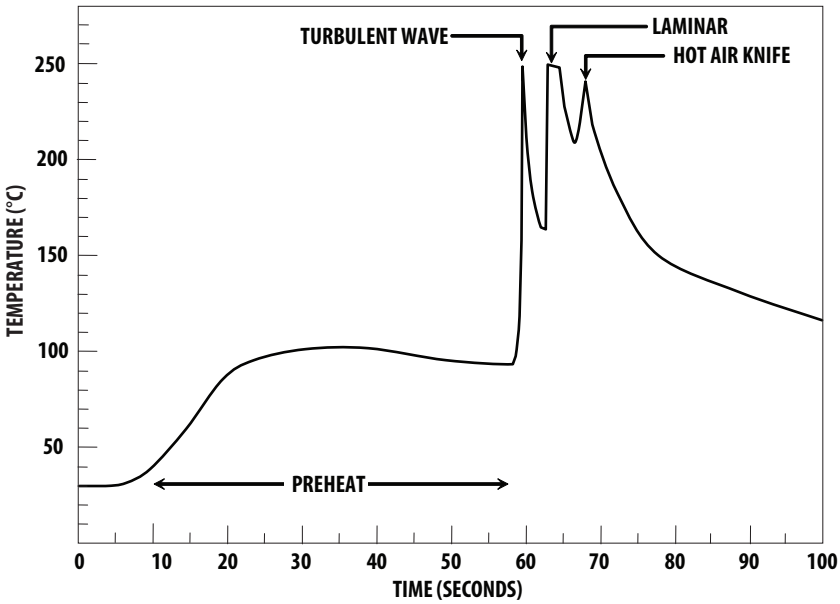

Recommended solder:
Sn63 (Leaded solder alloy)
SAC305 (Lead free solder alloy)

Flux: Rosin flux

Solder bath temperature:
245°C± 5°C (maximum peak temperature = 250°C)

Dwell time: 1.5 sec – 3.0 sec (maximum = 3 sec)

Note: Allow for board to be sufficiently cooled to room temperature before exerting mechanical force.

Recommended solder:
Sn63 (Leaded solder alloy)
SAC305 (Lead free solder alloy)

Flux: Rosin flux

Solder bath temperature:
245°C± 5°C (maximum peak temperature = 250°C)

Dwell time: 1.5 sec – 3.0 sec (maximum = 3 sec)

Note: Allow for board to be sufficiently cooled to room temperature before exerting mechanical force.

chanhvinh.com

Broadcom, the pulse logo, Connecting everything, Avago Technologies, Avago, and the A logo are among the trademarks of Broadcom and/or its affiliates in the United States, certain other countries and/or the EU.

Copyright © 2015–2017 by Broadcom. All Rights Reserved.

The term “Broadcom” refers to Broadcom Limited and/or its subsidiaries. For more information, please visit www.broadcom.com.

Broadcom reserves the right to make changes without further notice to any products or data herein to improve reliability, function, or design. Information furnished by Broadcom is believed to be accurate and reliable. However, Broadcom does not assume any liability arising out of the application or use of this information, nor the application or use of any product or circuit described herein, neither does it convey any license under its patent rights nor the rights of others.

BROADCOM®

Lead (Pb) Free
RoHS 6 fully
compliant