chanhvinh.com

# HLMP-0103

T-1 3/4 (5 mm) Panel Mount Clip and Retaining Ring

## Product Overview

### Description

The HLMP-0103 is a black plastic mounting clip and retaining ring. It is designed to panel mount Agilent Solid State high profile T-13/4 size lamps. This clip and ring combination is intended for installation in instrument panels from 1.52 mm (0.060") to 2.67 mm (0.105") thick. For panels greater than 2.67 mm (0.105"), counterboring may be needed to the required thickness.

### Mounting Instructions

Drill a 6.45/6.63 (0.254/0.261in.) dia. hole in the panel. Deburr but do not chamfer the edges of the hole.

Press the panel clip into the hole from the front of the panel.

Press the LED into the clip from the back. Use blunt long nose pliers to push on the LED. Do not use force on the LED leads. A tool such as a nut driver may be used to press on the clip.

Slip a plastic retaining ring onto the back of the clip and press tight using tools such as two nut drivers.

Note: Clip and retaining ring are also available for T-1 package, from a non-Agilent source. Please contact Interconsal Association, 2584 Wyandotte Way, Mountain View, CA for additional information. Telephone: (408) 745-0161.

See Diagram that follows.

### Package Dimensions

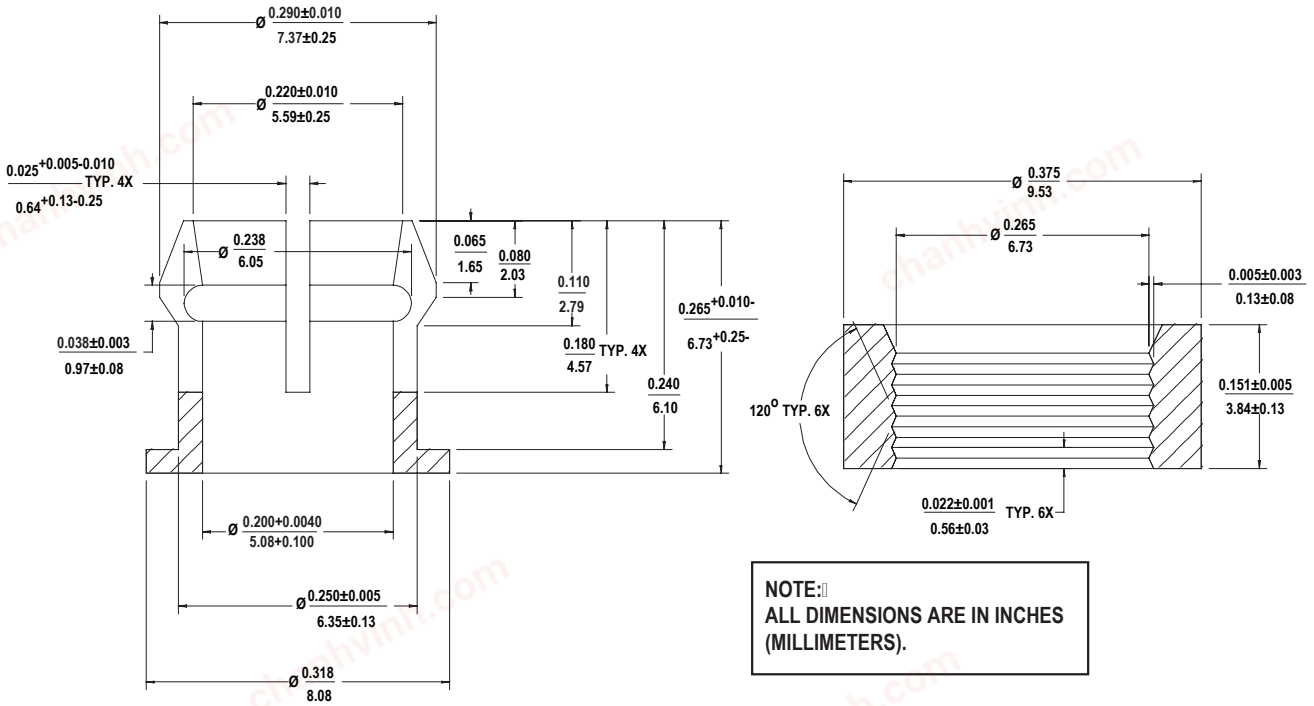

chanhvinh.com

## Mounting Instructions

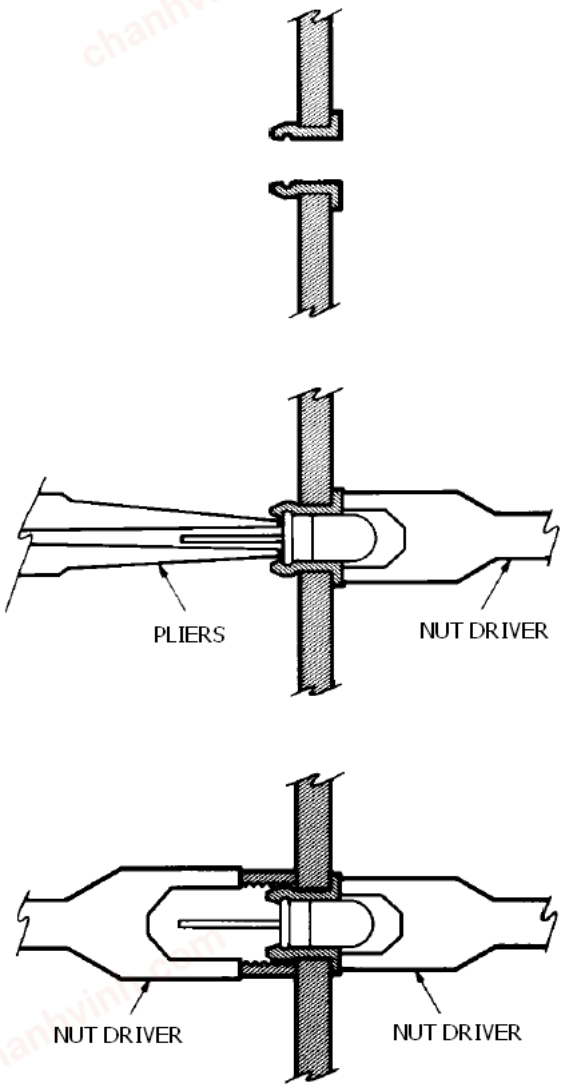


For product information and a complete list of distributors, please go to our web site: **www.avagotech.com**

Avago, Avago Technologies, and the A logo are trademarks of Avago Technologies, Limited in the United States and other countries.
Data subject to change. Copyright © 2007 Avago Technologies Limited. All rights reserved.
5989-0046EN - May 14, 2007