chanhvinh.com

BROADCOM®

Data Sheet

HFBR-14xxZ and HFBR-24xxZ Series

Low-Cost, 820-nm Miniature Link Fiber-Optic Components with ST, SMA, SC, and FC Ports



Description

The Broadcom® 820-nm Miniature Link Series of components are designed to provide cost-effective, high-performance fiber-optic communication links for information systems and industrial applications with link distances of several kilometers. With the HFBR-24x6Z, the 125-MHz analog receiver, data rates of up to 160 Mbaud can be attained.

Transmitters and receivers are directly compatible with popular “industry-standard” connectors: ST, SMA, SC, and FC. They are completely specified with multiple fiber sizes, including 50/125 µm, 62.5/125 µm, 100/140 µm, and 200 µm.

Products are available in various options. For example, transmitters with the improved protection option P show an increased ESD resistance to the pins. This HFBR-141xPxZ integrated solution is realized by including a Zener diode parallel to the LED.

The HFBR-14x4Z high-power transmitter and the HFBR-24x6Z 125-MHz receiver pair up to provide a duplex solution optimized for 100BASE-SX. 100BASE-SX is a Fast Ethernet Standard (100 Mb/s) at 850 nm on multimode fiber.

Evaluation kits are available for ST products, including transmitter, receiver, eval board, and technical literature.

Features

- RoHS compliant
- Low-cost transmitters and receivers
- Choice of ST, SMA, SC, or FC ports
- 820-nm wavelength technology
- Signal rates up to 160 Mbaud
- Link distances up to several kilometers
- Compatible with 50/125-µm, 62.5/125-µm, 100/140-µm, and 200-µm plastic-clad silica (PCS) fiber
- Repeatable ST connections within 0.2 dB typical
- Unique optical port design for efficient coupling
- Pick and place, and wave solderable
- No board-mounting hardware required
- Wide operating temperature range –40°C to +85°C
- Conductive port option

Applications

- 100BASE-SX Fast Ethernet on 850 nm
- Media/fiber conversion, switches, routers, hubs, and NICs on 100BASE-SX
- Local area networks
- Computer-to-peripheral links and computer monitor links
- Digital cross connect links
- Central office switch/PBX links
- Video links
- Modems and multiplexers
- Suitable for Tempest systems
- Industrial control links

chanhvinh.com

Part Number Guide

A/HFBR - x 4 x x aa Z — RoHS Compliant

1	Transmitter
2	Receiver

4	820 nm Transmitter and Receiver products

0	SMA, housed
1	ST, housed
2	FC, housed
E	SC, housed

P	Protection improved option
T	Threaded port option
C	Conductive port receiver option
M	Metal port option

2	TX, standard power
4	TX, high power
2	RX, 5 MBaud, TTL output
5	TX, high light output power
6	RX, 125 MHz, Analog Output
8	RX, DC to 50 MBaud, Digital Output
9	RX, 100 KBaud to 50 MBaud, Digital Output

Available Options

HFBR-1402Z	HFBR-1414Z	HFBR-1415PMZ	HFBR-2412Z	HFBR-2416TCZ	AFBR-2418TZ
HFBR-1404Z	HFBR-1414MZ	HFBR-1415PTZ	HFBR-2412MZ	HFBR-2422Z	AFBR-2409Z
HFBR-1412Z	HFBR-1414PZ	HFBR-1415TZ	HFBR-2412TZ	HFBR-24E2Z	AFBR-2419Z
HFBR-1412PZ	HFBR-1414PMZ	HFBR-1424Z	HFBR-2412TCZ	HFBR-24E6Z	AFBR-2419MZ
HFBR-1412PTZ	HFBR-1414PTZ	HFBR-14E4Z	HFBR-2416Z	AFBR-2408Z	AFBR-2419TZ
HFBR-1412TZ	HFBR-1414TZ	HFBR-2402Z	HFBR-2416MZ	AFBR-2418Z	
HFBR-1412TMZ	HFBR-1415Z	HFBR-2406Z	HFBR-2416TZ	AFBR-2418MZ	

NOTE:

- For better readability of the electrical and optical specifications, all available options (P, T, C, and M) are covered by the HFBR-x4xxZ product name; exceptions are explicitly noted.
- AFBR-24x8xZ receivers are designed for data rates from DC up to 50 Mbaud. AFBR-24x9xZ supports transmissions from 100 Kbaud up to 50 Mbaud. Refer to the separate data sheets for details about these digital optical receivers providing CMOS/TTL output logic.

chanhvinh.com

Link Selection Guide

For additional information about specific links, see the individual link descriptions. The HFBR-1415Z can be used for increased power budget or for lower driving current for the same data rates and link distances.

Data Rate (Mbaud)[a]	Distance (m)	Transmitter	Receiver	Fiber Size (µm)	Evaluation Kit
DC to 5	1500	HFBR-14x2Z	HFBR-24x2Z	62.5/125	HFBR-0410Z
DC to 50	2000	HFBR-14x4Z/14x5Z	AFBR-24x8xZ	62.5/125	AFBR-0549Z
0.1 to 50	1000	HFBR-14x4Z/14x5Z	AFBR-24x9xZ	62.5/125	AFBR-0550Z

a. The data rate range in the table refers to the evaluation kit documentation. For an analog receiver, such as the HFBR-24x6Z, the data rate range depends on the receiver circuit used.

chanhvinh.com

Options

In addition to the various port styles available for the HFBR-0400Z series products, there are also several extra options that can be ordered. To order an option, simply place the corresponding option number at the end of the part number. See Available Options for available options.

Option P (Protection Improved Option)

- Designed to withstand higher electrostatic discharge (ESD) to the pins (Class 1C, HBM)

Option T (Threaded Port Option)

- Allows ST style port components to be panel mounted
- Compatible with all current makes of ST multimode connectors
- Mechanical dimensions are compliant with MIL-STD-83522/13
- Maximum wall thickness when using nuts and washers from the HFBR-4411Z hardware kit is 2.8 mm (0.11 in.)
- Available on all ST ports

Option C (Conductive Port Receiver Option)

- Designed to withstand electrostatic discharge (ESD) of 25 kV to the optical port
- Significantly reduces the effect of electromagnetic interference (EMI) on receiver sensitivity
- Allows the designer to separate the signal and conductive port grounds
- Recommended for use in noisy environments
- Available on threaded ST port style receivers only
- The conductive port is connected to Pins 1, 4, 5, and 8 through the Port Grounding Path Insert

Option M (Metal Port Option)

- Nickel-plated aluminum connector receptacle
- Designed to withstand electrostatic discharge (ESD) of 15 kV to the optical port
- Significantly reduces the effect of electromagnetic interference (EMI) on receiver sensitivity
- Allows the designer to separate the signal and metal port grounds
- Recommended for use in very noisy environments
- Available on ST and threaded ST ports
- The metal port is connected to Pins 1, 4, 5, and 8 through the Port Grounding Path Insert

chanhvinh.com

Applications Support Guide

This section gives the designer information necessary to use the 820-nm Miniature Link Series components to make a functional optical transmission link.

Broadcom offers evaluation kits for hands-on experience with fiber-optic products as well as a wide range of application notes complete with circuit diagrams and board layouts.

Furthermore, the Broadcom application support group is always ready to assist with any design consideration.

Application Literature

Title	Description
Application Note 1065	Complete Solutions for IEEE 802.5J Fiberoptic Token Ring
Application Note 1121	DC to 32 Mbaud Fiberoptic Solutions
Application Note 1122	2 to 70 Mbaud Fiberoptic Solutions
Application Note 1123	20 to 160 Mbaud Fiberoptic Solutions
Application Note 1137	Generic Printed Circuit Layout Rules

Evaluation Kits

Broadcom offers fiber-optic kits that facilitate a simple means to evaluate and experience our products. These fiber-optic kits contain all the components and tools required for customers to quickly evaluate and access the value of our products within their respective applications.

HFBR-0410Z ST Evaluation Kit: DC to 5-Mbaud 820-nm Fiber-Optic Eval Kit

Contains the following:

- One HFBR-1412Z transmitter
- One HFBR-2412Z receiver
- Evaluation board
- Related literature

AFBR-0549Z Evaluation Kit: DC to 50-Mbaud 820-nm Fiber-Optic Eval Kit

Contains the following:

- One HFBR-1414PTZ transmitter
- One AFBR-2418TZ receiver
- Evaluation board
- Related literature

AFBR-0550Z Evaluation Kit: Up to 50-Mbaud 820-nm Fiber-Optic Eval Kit

Contains the following:

- One HFBR-1414PTZ transmitter
- One AFBR-2419TZ receiver
- Evaluation board
- Related literature

chanhvinh.com

Package and Handling Information

Package Information

All transmitters and receivers of the 820-nm Miniature Link Series are housed in a low-cost, dual-inline package that is made of high strength, heat resistant, chemically resistant, and UL 94V-O flame retardant plastic (UL File #E121562). The transmitters are easily identified by the light gray color connector port. The receivers are easily identified by the dark gray color connector port (black color for the conductive port). The package is designed for pick and place and wave soldering, so it is ideal for high volume production applications.

Handling and Design Information

Each part comes with a protective port cap or plug covering the optics.

NOTE: This plastic or rubber port cap is made to protect the optical path during assembly. It is not meant to remain on the part for a long period. These caps/plugs will vary by port style. When soldering, it is advisable to leave the protective cap on the unit to keep the optics clean. Good system performance requires clean port optics and cable ferrules to avoid obstructing the optical path.

Clean compressed air often is sufficient to remove particles of dirt; methanol on a cotton swab also works well.

Recommended Chemicals for Cleaning and Degreasing 820-nm Miniature Link Products

- Alcohols: methyl, isopropyl, isobutyl
- Aliphatics: hexane, heptane
- Other: soap solution, naphtha

Do not use partially halogenated hydrocarbons (such as 1.1.1 trichloroethane), ketones (such as MEK), acetone, chloroform, ethyl acetate, methylene dichloride, phenol, methylene chloride, or N-methylpyrolldone. Broadcom does not recommend the use of cleaners that use halogenated hydrocarbons because of their potential environmental harm.

chanhvinh.com

Mechanical Dimensions – SMA Port (HFBR-x40xZ)

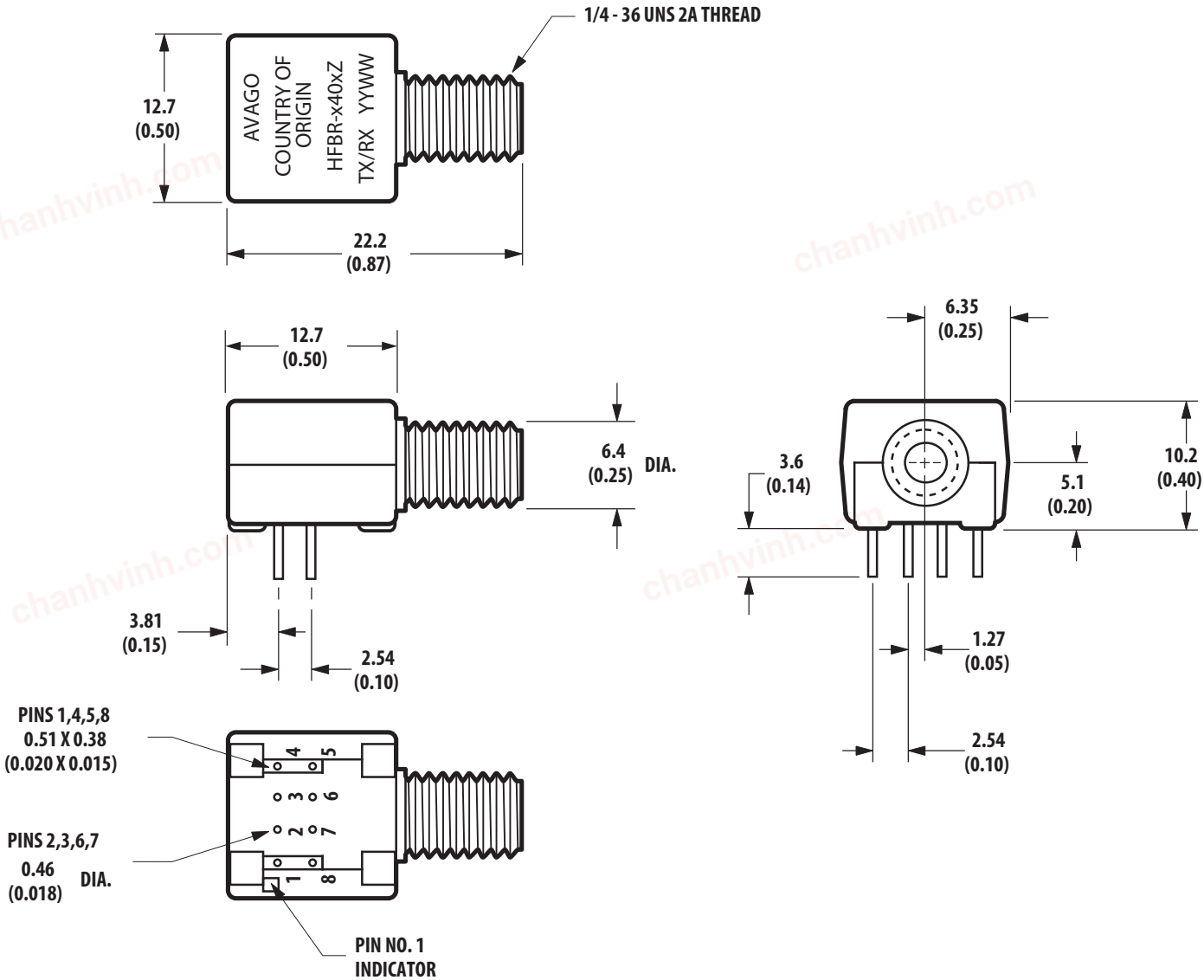

NOTE:

- Dimensions are in mm (inches).
- A finished hole diameter of at least 1.02 mm (0.04 in.) is recommended for all eight pins to ensure smooth mounting on the PCB.

chanhvinh.com

Mechanical Dimensions – ST Port (HFBR-x41xZ)

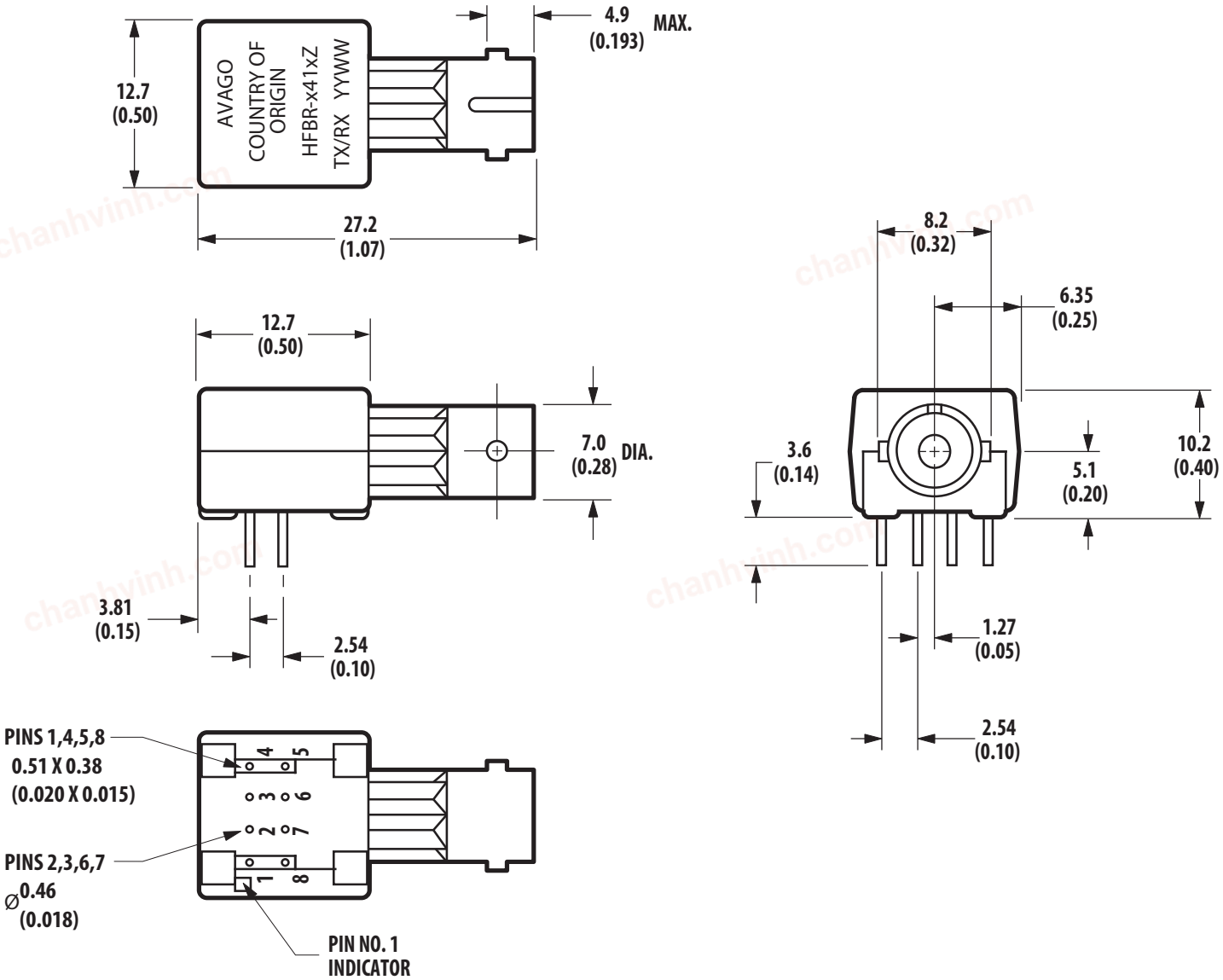

NOTE:

- Dimensions are in mm (inches).
- A finished hole diameter of at least 1.02 mm (0.04 in.) is recommended for all eight pins to ensure smooth mounting on the PCB.

chanhvinh.com

Mechanical Dimensions – Metal ST Port (HFBR-x41xMZ)

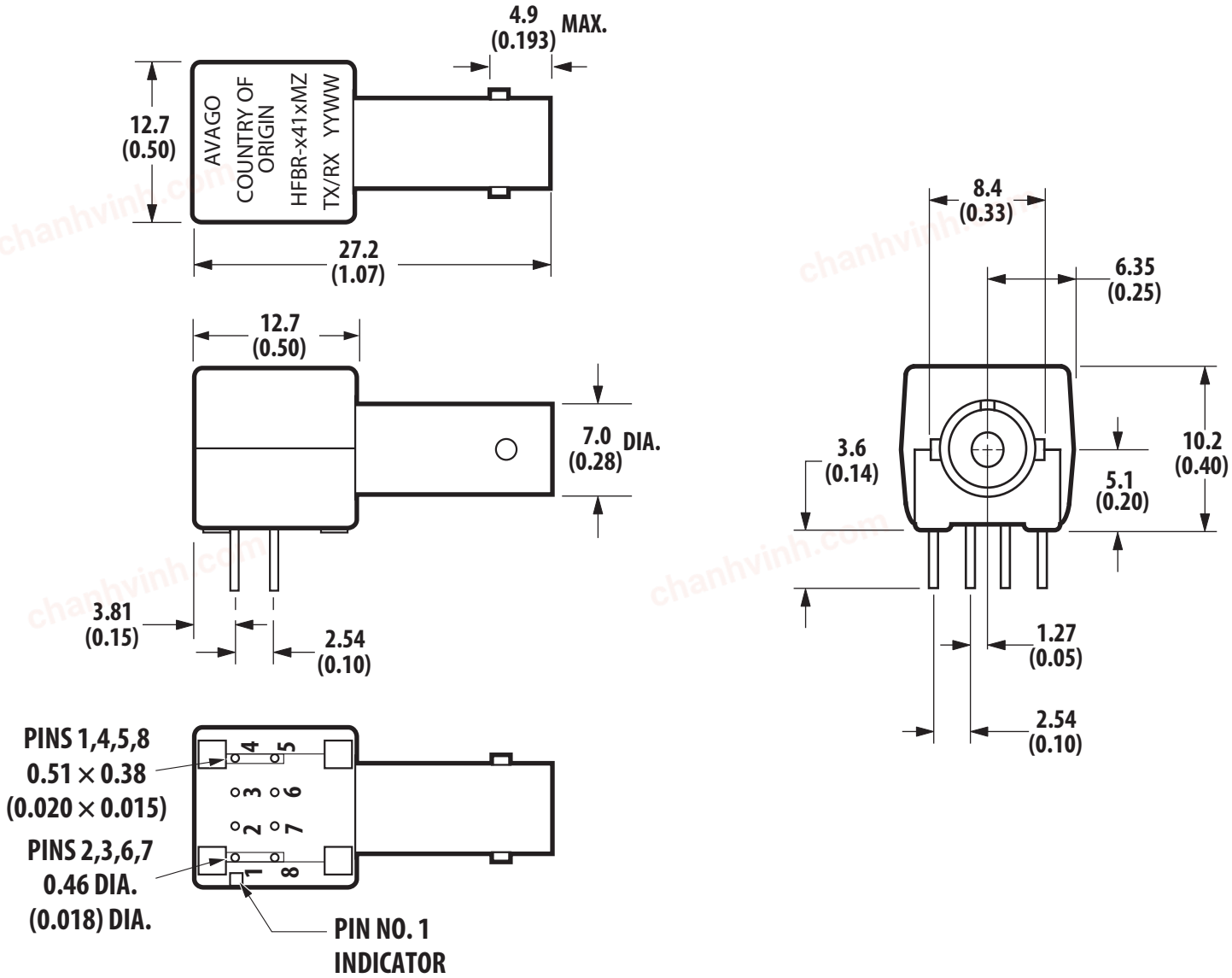

NOTE:

- Dimensions are in mm (inches).
- A finished hole diameter of at least 1.02 mm (0.04 in.) is recommended for all eight pins to ensure smooth mounting on the PCB.

chanhvinh.com

Mechanical Dimensions – Threaded ST Port (HFBR-x41xTZ)

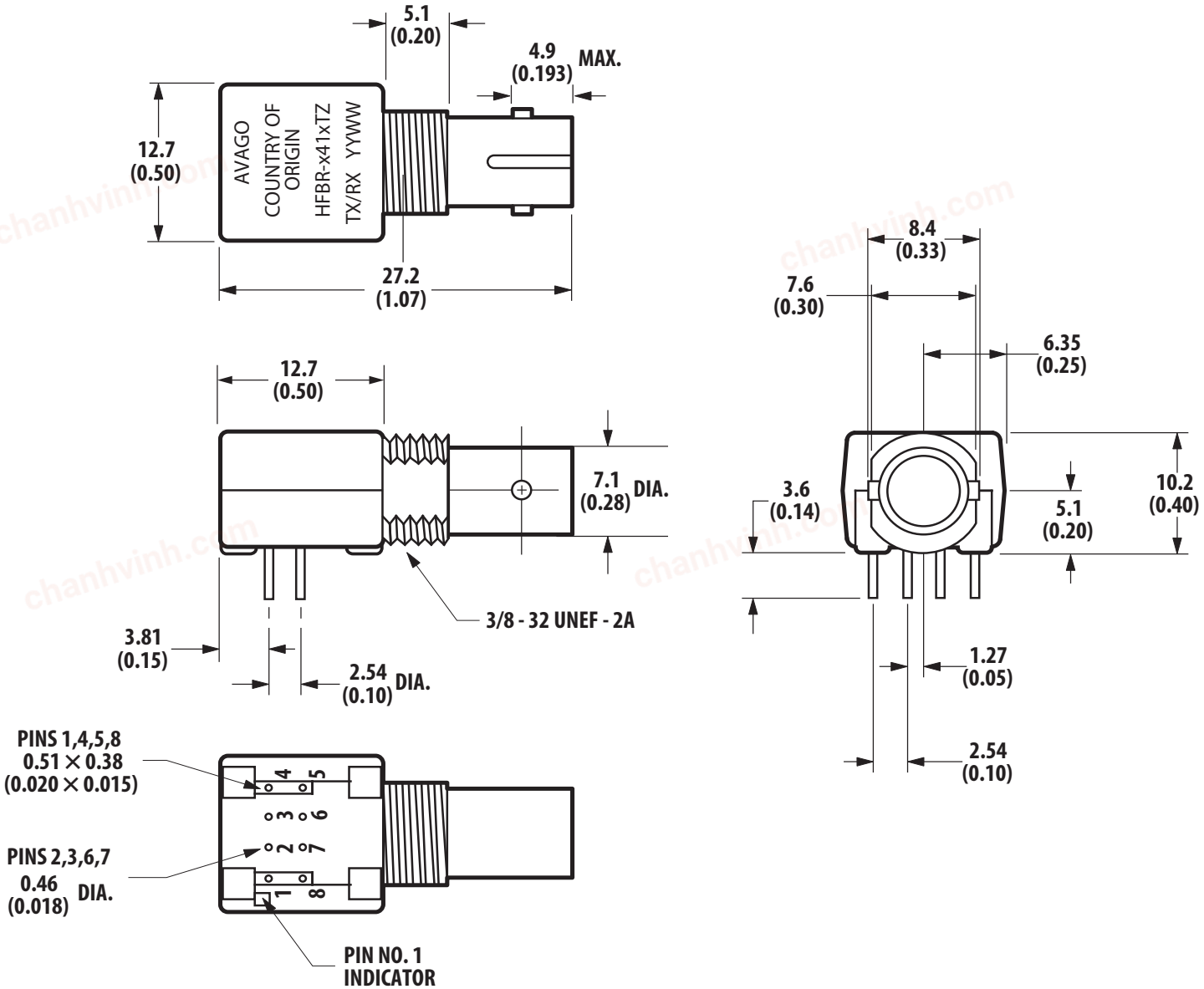

NOTE:

- Dimensions are in mm (inches).
- A finished hole diameter of at least 1.02 mm (0.04 in.) is recommended for all eight pins to ensure smooth mounting on the PCB.

chanhvinh.com

Mechanical Dimensions – FC Port (HFBR-x42xZ)

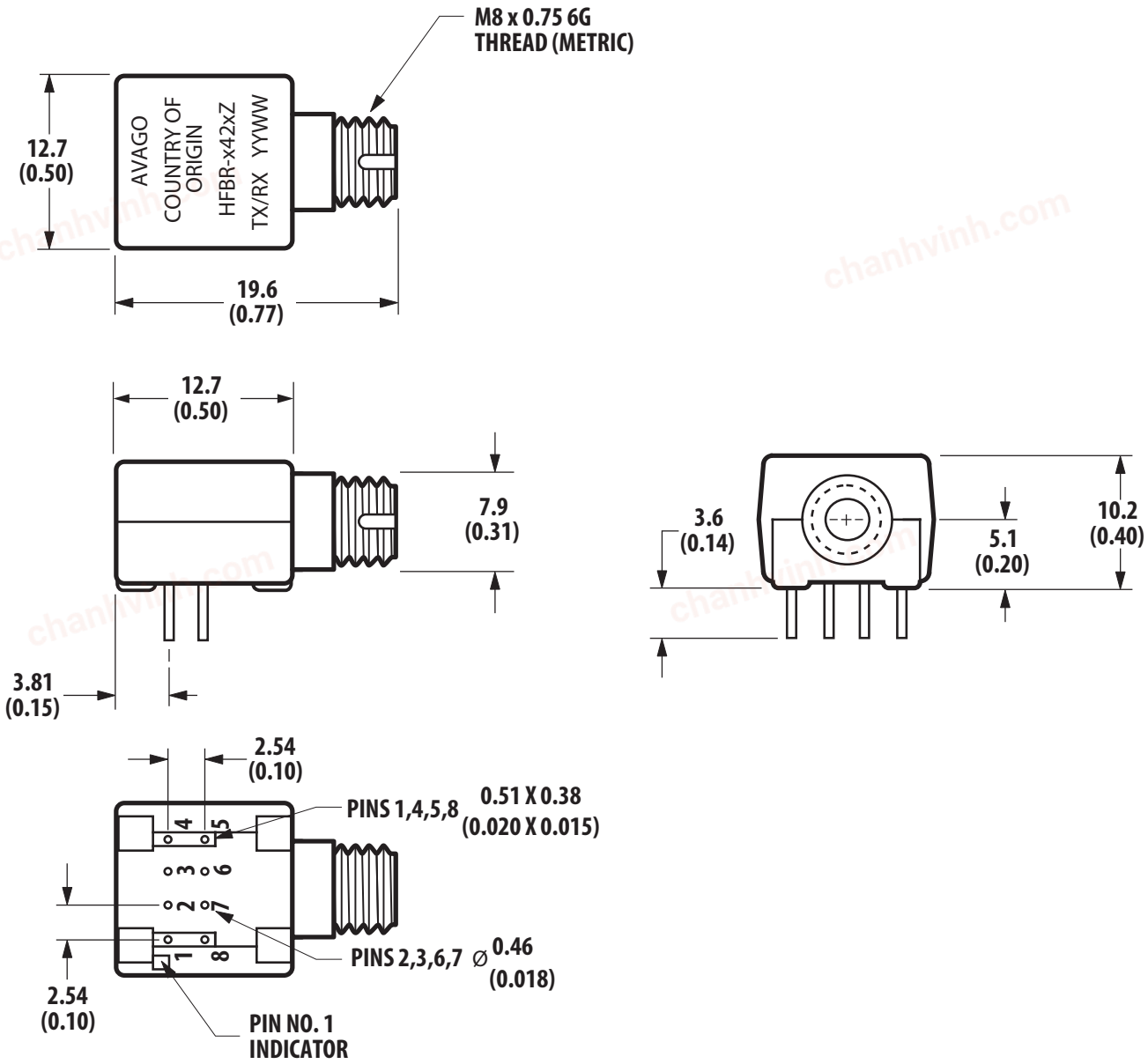

NOTE:

- Dimensions are in mm (inches).
- A finished hole diameter of at least 1.02 mm (0.04 in.) is recommended for all eight pins to ensure smooth mounting on the PCB.

chanhvinh.com

Mechanical Dimensions – SC Port (HFBR-x4ExZ)

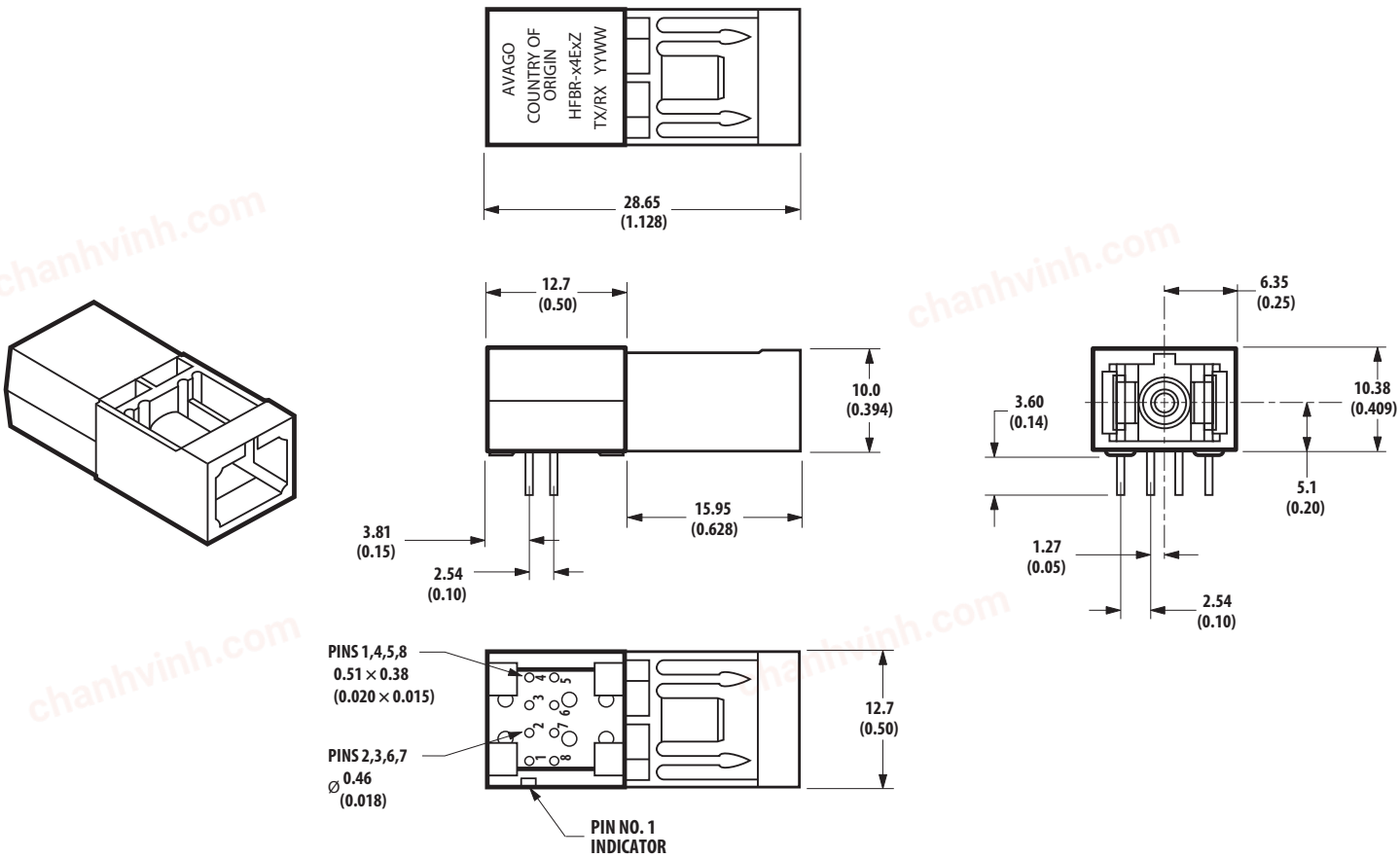

NOTE:

- Dimensions are in mm (inches).
- A finished hole diameter of at least 1.02 mm (0.04 in.) is recommended for all eight pins to ensure smooth mounting on the PCB.

chanhvinh.com

Cross-Sectional View

Figure 1: HFBR-x41xTZ ST Series Cross-Sectional View

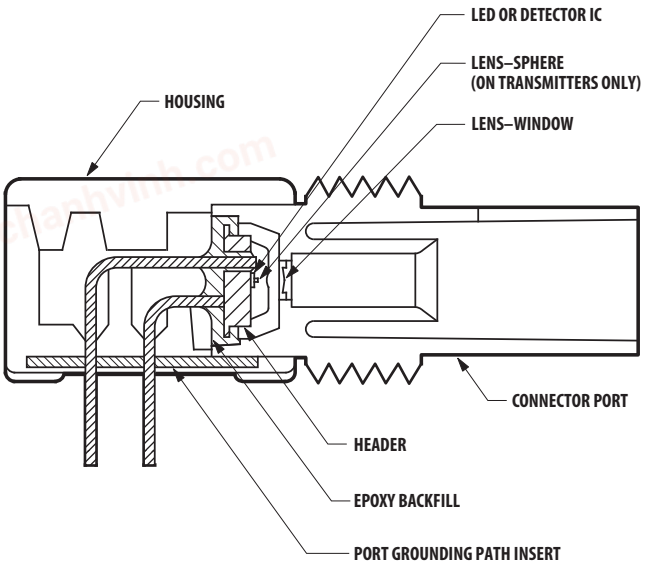

Panel Mount Hardware

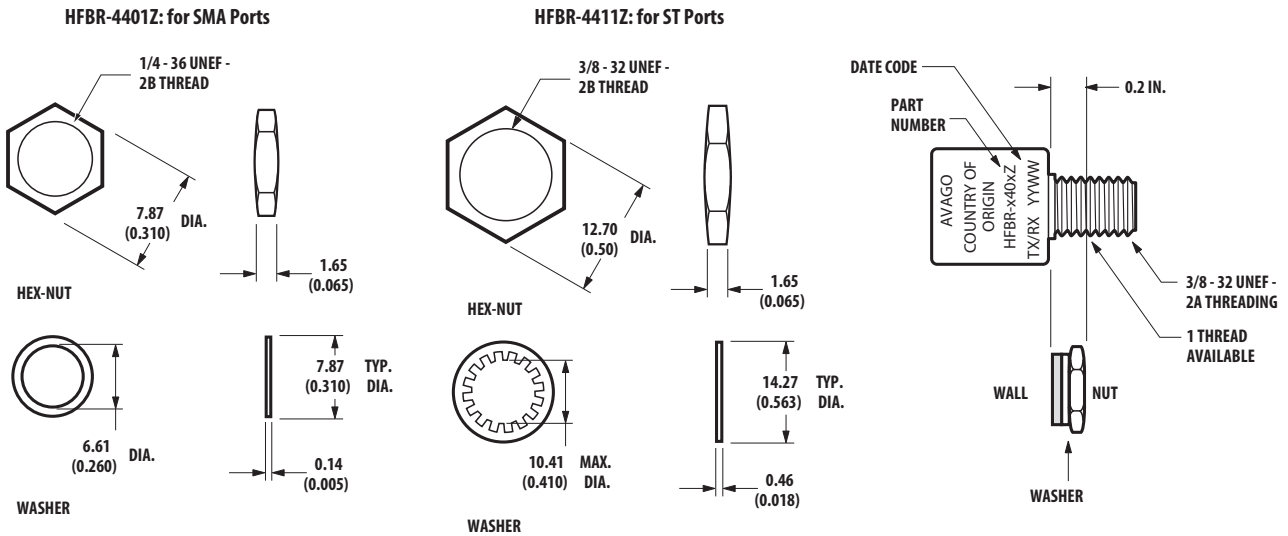

(Each HFBR-4401Z and HFBR-4411Z kit consists of 100 nuts and 100 washers).

Dimensions are in mm (inches).

Port Cap Hardware

- HFBR-4402Z: 500 SMA Port Caps
- HFBR-4120Z: 500 ST Port Plugs

chanhvinh.com

Typical Link Data

The following technical data is taken from a 5-Mbaud and 155-Mbaud link using the 820-nm Miniature Link Series. This data is meant to be regarded as an example of typical link performance for a given design and does not call out any link limitations.

5-Mbaud Link (HFBR-14xxZ/24x2Z)

Link performance: –40°C to +85°C unless otherwise specified.

Parameter	Symbol	Min.	Typ.	Max.	Units	Conditions	Reference
Optical Power Budget with 50/125-µm Fiber	OPB_{50}	4.2	9.6	—	dB	HFBR-14x4Z/24x2Z NA = 0.2	Note [a]
Optical Power Budget with 62.5/125-µm Fiber	$OPB_{62.5}$	8.0	15	—	dB	HFBR-14x4Z/24x2Z NA = 0.27	Note [a]
Optical Power Budget with 100/140-µm Fiber	OPB_{100}	8.0	15	—	dB	HFBR-14x2Z/24x2Z NA = 0.30	Note [a]
Optical Power Budget with 200-µm Fiber	OPB_{200}	13.0	20	—	dB	HFBR-14x2Z/24x2Z NA = 0.37	Note [a]
Data Rate	—	DC	—	5	Mbaud	—	Note [b]
Propagation Delay LOW to HIGH	t_{PLH}	—	72	—	ns	T_A = +25°C, P_R = –21 dBm peak, Fiber cable length = 1m	Figures 6, 7, 8
Propagation Delay HIGH to LOW	t_{PHL}	—	46	—	ns		
System Pulse Width Distortion	$t_{PLH} - t_{PHL}$	—	26	—	ns		
Bit Error Rate	BER	—	—	10^{-9}	—	Data rate < 5 Mbaud, P_R > –24 dBm peak	

a. Optical power board at T_A = –40°C to +85°C, V_{CC} = 5.0V_{dc}, I_F ON = 60 mA. P_R = –24 dBm peak.

b. Data rate limit is based on these assumptions:
- 50% duty factor modulation; for example, Manchester I or BiPhase Manchester II
- Continuous data
- PLL phase lock Loop demodulation
- TTL threshold

chanhvinh.com

5-Mbaud Logic Link Design

The resistor R_1 is the only significant element in the drive circuit (see Figure 2) that limits the current through the LED, apart from the gate's output port. Depending on the actual gate used, the voltage drop on the output port V_{port} could be neglected. The forward voltage value, V_F, of the LED depends on the desired LED current and on the temperature (see Figure 9). Make sure you take this behavior into account for the calculations.

The curves in Figure 3, Figure 4, and Figure 5 are constructed assuming no inline splice or any additional system loss. Besides fiber attenuation, for correct power budget calculation, make sure you take into account the effect of bending, humidity, ambient temperature, aging and other relevant influences. All these additional losses reduce the achievable link distance accordingly.

For calculating the LED's aging effect, an additional loss of about 1.5 dB is recognized.

The following example illustrates the technique for selecting the appropriate value of I_F and R_1:

$$R_1 = \frac{V_{CC} - V_F}{I_F}$$

Maximum distance required = 2000 meters by using HFBR-14x4Z/24x2Z logic link with 62.5/125-µm fiber.

Figure 4 shows the "worst-case" drive current of about 43 mA for reaching a distance of about 2000 meters.

Figure 9 shows the transmitter forward voltage of about V_F = 1.62V. If the typical circuit configuration (Figure 2) is used at V_{cc} = 5.0V, the resistor value R_1 should be chosen to 78.6Ω (3.38V / 43 mA) for reaching driver current of about 43 mA.

HFBR-14x4Z Output Power Measured Out of 1 Meter of Cable shows the guaranteed HFBR-14x4Z's optical output power limit of –16.0 dBm (for driver current of 60 mA) over the entire temperature range.

Figure 10 shows the normalized typical output power. When the transmitter is driven with 43 mA, the optical output power is about 0.70 or –1.55 dB lower than at 60 mA.

With an assumed fiber attenuation of 3.2 dB/km and the reduced driver current of 43 mA, the minimum optical output power at the fiber end is about –24 dBm, which is equal to the receiver sensitivity over the entire temperature range.

For balancing the individual additional system losses, the driver current must be increased accordingly.

Figure 2: Typical Circuit Configuration

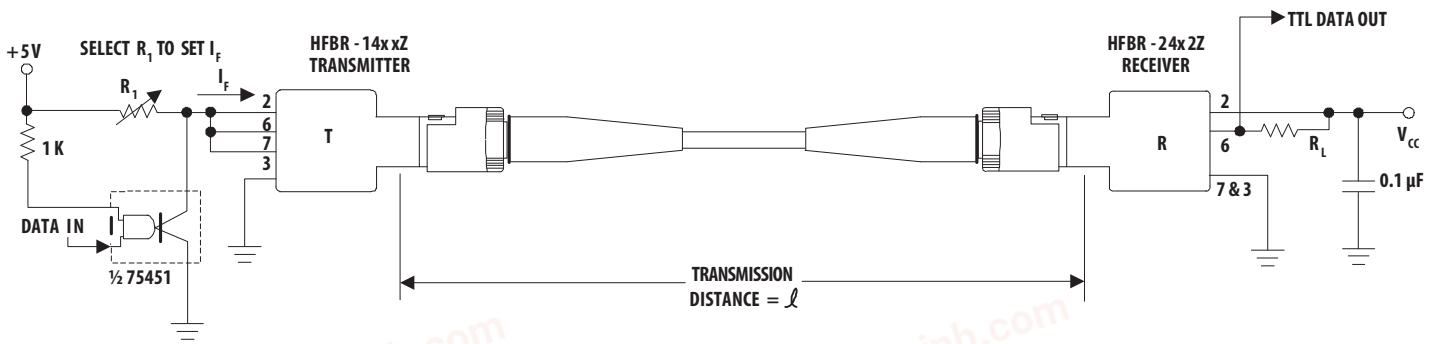

NOTE: A bypass capacitor (0.01-µF to 0.1-µm ceramic) must be connected from pin 2 to pin 7 of the receiver. The total lead length between both ends of the capacitor and the pins should not exceed 20 mm.

chanhvinh.com

The following diagrams (Figure 3 to Figure 5) serve as an aid in link design and are based on theoretical calculations. For broad use, no additional effects, such as aging, were taken into account. The additional losses and the individual safety buffer values should be added separately. These diagrams reflect the pure viewing of power budget and do not allows conclusions about the actual link quality.

Overdrive: Maximum optical output power of Tx combined with receiver sensitivity of –10 dBm over the entire temperature range.

Typical 25°C: Typical optical output power of Tx combined with receiver sensitivity of –25.4 dBm at T_A = 25°C.

Worst Case: Minimum optical output power of Tx combined with receiver sensitivity of –24 dBm over the entire temperature range.

chanhvinh.com

Figure 3: Typical HFBR-14x4xZ/HFBR-24x2xZ Link with 100/140-µm Fiber

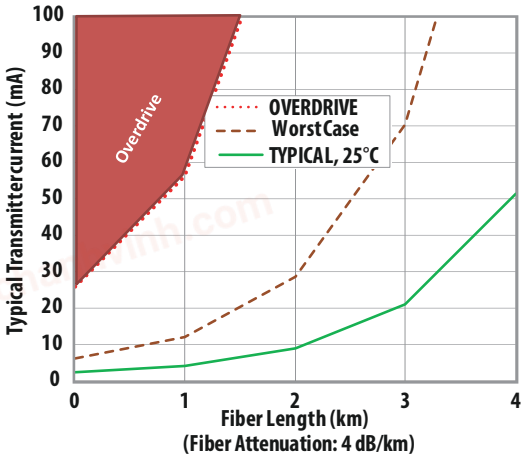

Figure 4: Typical HFBR-14x4xZ/HFBR-24x2xZ Link with 62.5/125-µm Fiber

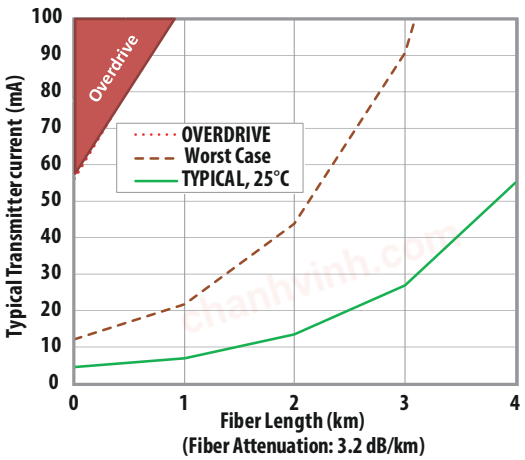

Figure 5: Typical HFBR-14x4xZ/HFBR-24x2xZ Link with 50/125-µm Fiber

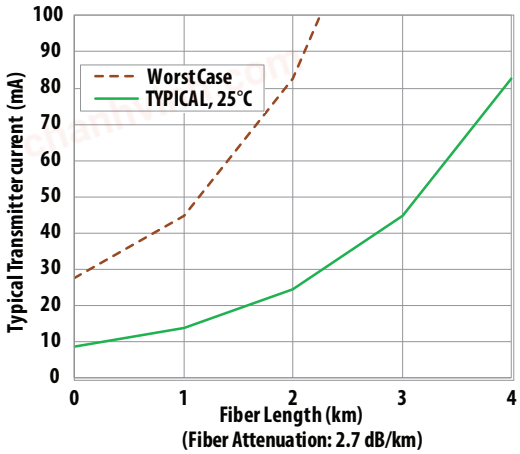

Figure 6: Typical Propagation Delay Times of Link (HFBR-14x4Z/ HFBR-24x2Z) Measured at T_A = 25°C, 5 Mbaud, and with 1m of Cable

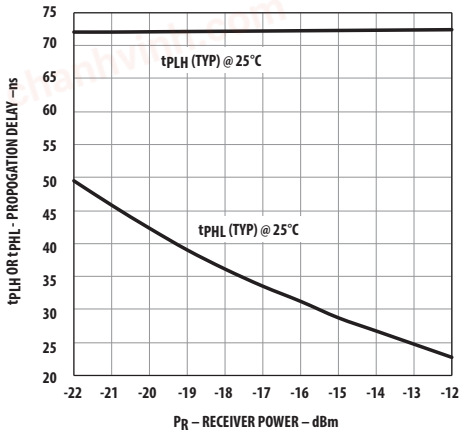

Figure 7: Typical Pulse Width Distortion of Link (HFBR-14x4Z/ HFBR-24x2Z) Measured at T_A = 25°C, 5 Mbaud, and with 1m of Cable

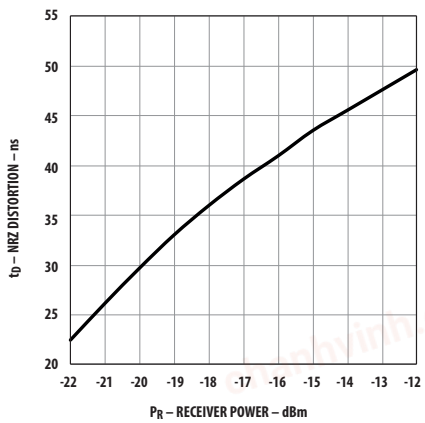

chanhvinh.com

Figure 8: System Propagation Delay Test Circuit and Waveform Timing Definitions

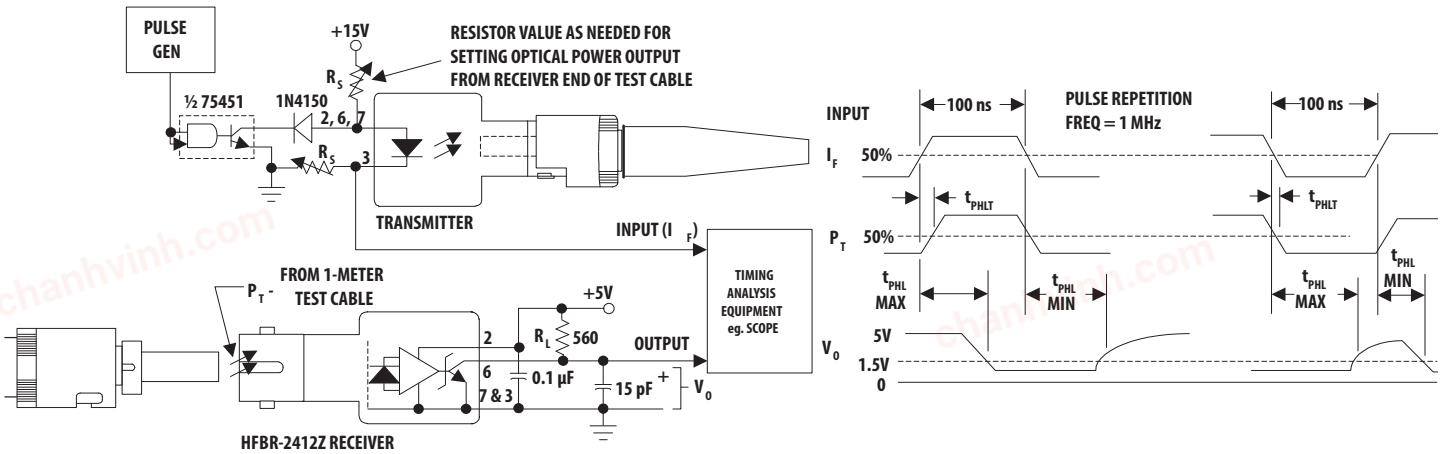

155-Mbaud Link (HFBR-14x4Z/24x6Z)

Typical Link Performance

Parameter	Symbol	Min.	Typ.[a, b]	Max.	Units	Conditions	Reference
Optical Power Budget with 50/125-µm Fiber	OPB_{50}	—	13.9	—	dB	NA = 0.2	Note [b]
Optical Power Budget with 62.5/125-µm Fiber	OPB_{62}	—	17.7	—	dB	NA = 0.27	
Optical Power Budget with 100/140-µm Fiber	OPB_{100}	—	17.7	—	dB	NA = 0.30	
Optical Power Budget with 200-µm PCS Fiber	OPB_{200}	—	22.0	—	dB	NA = 0.35	
Data Format 20% to 80% Duty Factor	—	20	—	160	Mbaud	—	
System Pulse Width Distortion	$\lvert t_{PLH} - t_{PHL} \rvert$	—	1	—	ns	P_R = –7 dBm peak 1m, 62.5/125-µm fiber	
Bit Error Rate	BER	—	10^{-9}	—	—	Data rate < 100 Mbaud, P_R > –31 dBm peak	Note [b]

a. Typical data at T_A = +25°C, V_{CC} = 5.0V_{dc}, PECL serial interface.

b. Typical OPB was determined at a probability of error (BER) of 10^{-9}. Lower probabilities of error can be achieved with short fibers that have less optical loss.

chanhvinh.com

HFBR-14x2Z/14x4Z/14x5Z Low-Cost High-Speed Transmitters

Description

The HFBR-14xxZ fiber-optic transmitter contains an 820-nm AlGaAs emitter capable of efficiently launching optical power into four different optical fiber sizes: 50/125-µm, 62.5/125-µm, 100/140-µm, and 200-µm plastic-clad silica (PCS). This allows the designer flexibility in choosing the fiber size. The HFBR-14xxZ is designed to operate with the Broadcom HFBR-24xxZ fiber-optic receivers.

The HFBR-14xxZ transmitter's high coupling efficiency allows the emitter to be driven at low current levels resulting in low power consumption and increased reliability of the transmitter. The HFBR-14x4Z high power transmitter is optimized for small size fiber and typically can launch –15.8 dBm of optical power at 60 mA into 50/125-µm fiber and –12 dBm into 62.5/125-µm fiber. The HFBR-14x2Z standard transmitter typically can launch –12 dBm of optical power at 60 mA into 100/140-µm fiber cable. It is ideal for large size fiber, such as 100/140 µm. The high launched optical power level is useful for systems where star couplers, taps, or inline connectors create large fixed losses.

For 820-nm Miniature Link transmitters with protection improved option "P", a Zener diode parallel to the LED was implemented. Therefore, a higher ESD capability could be attained.

NOTE: Parameters "reverse input voltage" and "diode capacitance" for "HFBR-141xPxZ" transmitters deviate from the non-P-parts.

Consistent coupling efficiency is ensured by the double-lens optical system (Figure 1). Power coupled into any of the three fiber types varies less than 5 dB from part to part at a given drive current and temperature. Consistent coupling efficiency reduces receiver dynamic range requirements, which allows for longer link lengths.

Housed Product

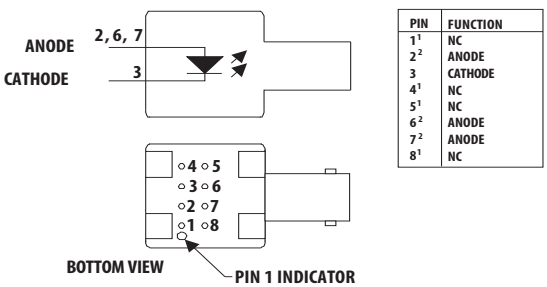

PIN	FUNCTION
1[1]	NC
2[2]	ANODE
3	CATHODE
4[1]	NC
5[1]	NC
6[2]	ANODE
7[2]	ANODE
8[1]	NC

NOTES:
1. PINS 1, 4, 5, AND 8 ARE ELECTRICALLY CONNECTED.
2. PINS 2, 6, AND 7 ARE ELECTRICALLY CONNECTED TO THE HEADER.
   To minimize the thermal resistance, the anode trace should be made as large as is consistent with good RF circuit design.

Regulatory Compliance – Targeted Specifications

Feature	Performance	Reference
Electrostatic Discharge (ESD)	Class 1C (>1000V, <2000V) – Human Body Model	Notes [a, b]
	Class 1B (>500V, <1000V) – Human Body Model	Notes [a, c]

a. ESD capability for all pins HBM (Human Body Model) according JEDEC JESD22-A114.

b. Only valid for HFBR-141xPxZ (protection improved option).

c. Valid for non protection improved transmitter option.

chanhvinh.com

Absolute Maximum Ratings

Parameter	Symbol	Min.	Max.	Units	Reference
Storage Temperature	T_S	–55	+85	°C	
Operating Temperature	T_A	–40	+85	°C	
Lead Soldering Cycle					
Temperature	—	—	+260	°C	
Time	—	—	10	seconds	
Forward Input Current					
Peak	I_{FPK}	—	200	mA	Note [a]
dc	I_{Fdc}	—	100	mA	
Reverse Input Voltage	VBR	—	1.8	V	
		—	0.3	V	Note [b]

a. For I_{FPK} > 100 mA, the time duration should not exceed 2 ns.

b. Only valid for HFBR-141xPxZ (protection improved option).

Electrical/Optical Specifications

–40°C to +85°C unless otherwise specified.

Parameter	Symbol	Min.	Typ[a]	Max.	Units	Conditions	Reference
Forward Voltage	V_F	1.48	1.70	2.09	V	I_F = 60 mA dc	Figure 9
		—	1.84	—		I_F = 100 mA dc	
Forward Voltage Temperature Coefficient	$\Delta V_F/\Delta T$	—	–0.22	—	mV/K	I_F = 60 mA dc	Figure 9
		—	–0.18	—		I_F = 100 mA dc	
Reverse Input Voltage	V_{BR}	1.8	3.8	—	V	I_F = –100 µA dc	
		0.3	0.7	—	V	I_F = –100 µA dc	Note [b]
Peak Emission Wavelength	I_P	792	820	865	nm	—	
Diode Capacitance	C_T	—	55	—	pF	V = 0V, f = 1 MHz	
		—	70	—	pF	V = 0V, f = 1 MHz	Note [b]
Optical Power Temperature Coefficient	$\Delta P_T/\Delta T$	—	–0.006	—	dB/K	I = 60 mA dc	
		—	–0.010	—		I = 100 mA dc	
14x2Z Numerical Aperture	NA	—	0.49	—	—	—	
14x4Z Numerical Aperture	NA	—	0.31	—	—	—	
14x2Z Optical Port Diameter	D	—	290	—	µm	—	Note [c]
14x4Z Optical Port Diameter	D	—	150	—	µm	—	Note [c]

a. Typical data at T_A = +25°C.

b. Only valid for HFBR-141xPxZ (protection improved option).

c. D is measured at the plane of the fiber face and defines a diameter where the optical power density is within 10 dB of the maximum.

chanhvinh.com

HFBR-14x2Z Output Power Measured Out of 1 Meter of Cable

Parameter	Symbol	Min.	Typ.	Max.	Units	Conditions	Reference
50/125-µm Fiber Cable	PT_{50}	–21.8	–18.8	–16.8	dBm peak	T_A = +25°C, I_F = 60 mA	Notes a, b, c Figure 10
		–22.8	—	–15.8	dBm peak	T_A = –40°C to +85°C, I_F = 60 mA	
		–20.3	–16.8	–14.4	dBm peak	T_A = +25°C, I_F = 100 mA	
		–21.9	—	–13.8	dBm peak	T_A = –40°C to +85°C, I_F = 100 mA	
62.5/125-µm Fiber Cable	PT_{62}	–19.0	–16.0	–14.0	dBm peak	T_A = +25°C, I_F = 60 mA	
		–20.0	—	–13.0	dBm peak	T_A = –40°C to +85°C, I_F = 60 mA	
		–17.5	–14.0	–11.6	dBm peak	T_A = +25°C, I_F = 100 mA	
		–19.1	—	–11.0	dBm peak	T_A = –40°C to +85°C, I_F = 100 mA	
100/140-µm Fiber Cable	PT_{100}	–15.0	–12.0	–10	dBm peak	T_A = +25°C, I_F = 60 mA	
		–16.0	—	–9.0	dBm peak	T_A = –40°C to +85°C, I_F = 60 mA	
		–13.5	–10.0	–7.6	dBm peak	T_A = +25°C, I_F = 100 mA	
		–15.1	—	–7.0	dBm peak	T_A = –40°C to +85°C, I_F = 100 mA	
200-µm PCS Fiber Cable	P_{T200}	–10.0	–7.0	–5.0	dBm peak	T_A = +25°C, I_F = 60 mA	
		–11.0	—	–4.0	dBm peak	T_A = –40°C to +85°C, I_F = 60 mA	
		–8.5	–5.0	–2.6	dBm peak	T_A = +25°C, I_F = 100 mA	
		–10.1	—	–2.0	dBm peak	T_A = –40°C to +85°C, I_F = 100 mA	

a. P_T is measured with a large area detector at the end of 1 meter of mode stripped cable, with an ST precision ceramic ferrule (MILSTD-83522/13) for HFBR-141xZ, and with an SMA 905 precision ceramic ferrule for HFBR-140xZ.

b. When changing mW to dBm, the optical power is referenced to 1 mW. Optical Power P(dBm) = 10log (P(mW) / 1 mW).

c. Fiber NA is measured at the end of 2 meters of mode stripped fiber, using the far-field pattern. NA is defined as the sine of the half angle, determined at 5% of the peak intensity point. When using other manufacturer's fiber cable, results will vary due to differing NA values and specification methods.

CAUTION! The small junction sizes inherent to the design of these components increase the components' susceptibility to damage from electrostatic discharge (ESD). It is advised that normal static precautions be taken in handling and assembly of these components to prevent damage and/or degradation which may be induced by ESD.

chanhvinh.com

HFBR-14x4Z Output Power Measured Out of 1 Meter of Cable

Parameter	Symbol	Min.	Typ.[a]	Max.	Units	Conditions	Reference
50/125-µm Fiber Cable NA = 0.2	PT_{50}	–18.8	–15.8	–13.8	dBm peak	T_A = +25°C, I_F = 60 mA	Notes [b, c, d] Figure 10
		–19.8	—	–12.8	dBm peak	T_A = –40°C to +85°C, I_F = 60 mA	
		–17.3	–13.8	–11.4	dBm peak	T_A = +25°C, I_F = 100 mA	
		–18.9	—	–10.8	dBm peak	T_A = –40°C to +85°C, I_F = 100 mA	
62.5/125-µm Fiber Cable NA = 0.275	PT_{62}	–15.0	–12.0	–10.0	dBm peak	T_A = +25°C, I_F = 60 mA	
		–16.0	—	–9.0	dBm peak	T_A = –40°C to +85°C, I_F = 60 mA	
		–13.5	–10.0	–7.6	dBm peak	T_A = +25°C, I_F = 100 mA	
		–15.1	—	–7.0	dBm peak	T_A = –40°C to +85°C, I_F = 100 mA	
100/140-µm Fiber Cable NA = 0.3	PT_{100}	–11.5	–8.5	–6.5	dBm peak	T_A = +25°C, I_F = 60 mA	
		–12.5	—	–5.5	dBm peak	T_A = –40°C to +85°C, I_F = 60 mA	
		–10.0	–6.5	–4.1	dBm peak	T_A = +25°C, I_F = 100 mA	
		–11.6	—	–3.5	dBm peak	T_A = –40°C to +85°C, I_F = 100 mA	
200-µm PCS Fiber Cable NA = 0.37	PT_{200}	–7.5	–4.5	–2.5	dBm peak	T_A = +25°C, I_F = 60 mA	
		–8.5	—	–1.5	dBm peak	T_A = –40°C to +85°C, I_F = 60 mA	
		–6.0	–2.5	–0.1	dBm peak	T_A = +25°C, I_F = 100 mA	
		–7.6	—	0.5	dBm peak	T_A = –40°C to +85°C, I_F = 100 mA	

a. Typical data at T_A = +25°C.

b. PT is measured with a large area detector at the end of 1 meter of mode stripped cable, with an ST precision ceramic ferrule (MILSTD-83522/13) for HFBR-141xZ, and with an SMA 905 precision ceramic ferrule for HFBR-140xZ.

c. When changing mW to dBm, the optical power is referenced to 1 mW. Optical Power P(dBm) = 10log (P(mW) / 1 mW).

d. Fiber NA is measured at the end of 2 meters of mode stripped fiber, using the far-field pattern. NA is defined as the sine of the half angle, determined at 5% of the peak intensity point. When using other manufacturer's fiber cable, results will vary due to differing NA values and specification methods.

CAUTION! The small junction sizes inherent to the design of these components increase the components' susceptibility to damage from electrostatic discharge (ESD). It is advised that normal static precautions be taken in handling and assembly of these components to prevent damage and/or degradation which may be induced by ESD.

chanhvinh.com

HFBR-14x5Z Output Power Measured Out of 1 Meter of Cable

Parameter	Symbol	Min.	Typ.	Max.	Units	Conditions	Reference
50/125-µm Fiber Cable NA = 0.2	PT_{50}	–16.5	–14.3	–11.5	dBm peak	T_A = +25°C, I_F = 60 mA	Notes a, b, c Figure 10
		–17.5	—	–10.5	dBm peak	T_A = –40°C to 85°C, I_F = 60 mA	
62.5/125-µm Fiber Cable NA = 0.275	PT_{62}	–12.0	–10.5	–8.0	dBm peak	T_A = +25°C, I_F = 60 mA	
		–13.0	—	–7.0	dBm peak	T_A = –40°C to 85°C, I_F = 60 mA	
200-µm Fiber Cable NA = 0.37	PT_{200}	–6.0	–3.6	0.0	dBm peak	T_A = +25°C, I_F = 60 mA	
		–7.0	—	1.0	dBm peak	T_A = –40°C to 85°C, I_F = 60 mA	

a. PT is measured with a large area detector at the end of 1 meter of mode stripped cable, with an ST precision ceramic ferrule (MILSTD-83522/13) for HFBR-141xZ, and with an SMA 905 precision ceramic ferrule for HFBR-140xZ.

b. When changing mW to dBm, the optical power is referenced to 1 mW. Optical Power P(dBm) = 10log (P(mW) / 1 mW).

c. Fiber NA is measured at the end of 2 meters of mode stripped fiber, using the far-field pattern. NA is defined as the sine of the half angle, determined at 5% of the peak intensity point. When using other manufacturer's fiber cable, results will vary due to differing NA values and specification methods.

CAUTION! The small junction sizes inherent to the design of these components increase the components' susceptibility to damage from electrostatic discharge (ESD). It is advised that normal static precautions be taken in handling and assembly of these components to prevent damage and/or degradation which may be induced by ESD.

14x2Z/14x4Z/14x5Z Dynamic Characteristics

Parameter	Symbol	Min.	Typ.[a]	Max.	Units	Conditions	Reference
Rise Time, Fall Time (10% to 90%)	t_r, t_f	—	4.0	6.5	ns No pre-bias	I_F = 60 mA	Note b Figure 11
Rise Time, Fall Time (10% to 90%)	t_r, t_f	—	3.0	—	ns	I_F = 10 mA to 100 mA	Figure 12
Pulse Width Distortion	PWD	—	0.5	—	ns	—	Figure 12

a. Typical data at T_A = +25°C.

b. Pre-bias is recommended if the signal rate >10 Mbaud; see the recommended drive circuit in Figure 11.

All HFBR-14XXZ LED transmitters are classified as IEC 825-1 Accessible Emission Limit (AEL) Class 1 based upon the current proposed draft scheduled to go in to effect on January 1, 1997. AEL Class 1 LED devices are considered eye safe. Contact your Broadcom sales representative for more information.

CAUTION! The small junction sizes inherent to the design of these components increase the components' susceptibility to damage from electrostatic discharge (ESD). It is advised that normal static precautions be taken in handling and assembly of these components to prevent damage and/or degradation which may be induced by ESD.

chanhvinh.com

Figure 9: Typical Forward Voltage and Current Characteristics

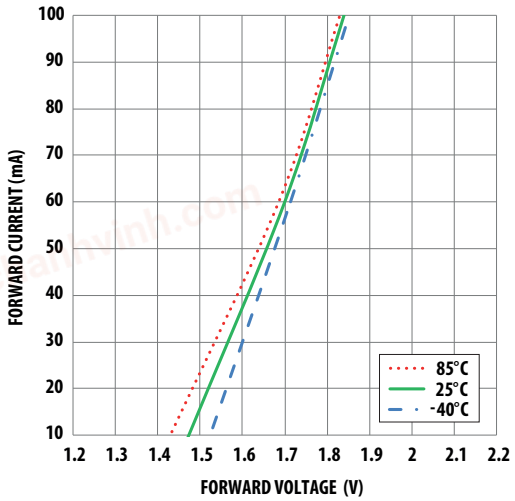

Figure 10: Normalized Typical Transmitter Output vs. Forward Current

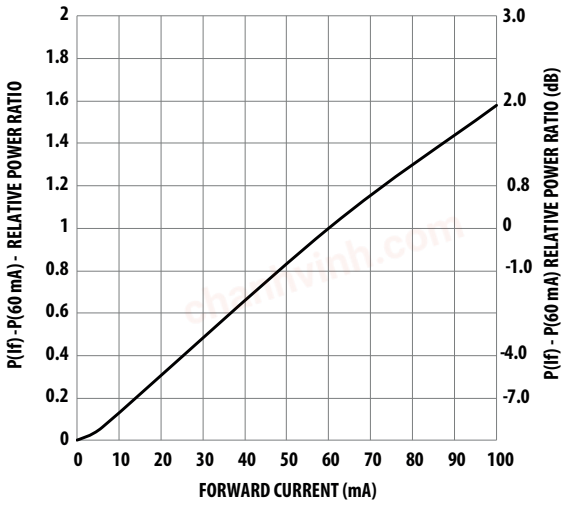

Recommended Transmitter Driver Circuitry

Transmitter	R1	R2	R3	C3
HFBR-14x2Z/x4Z/x5Z	33Ω	33Ω	270Ω	75 pF

Figure 11: Recommended Drive Circuit

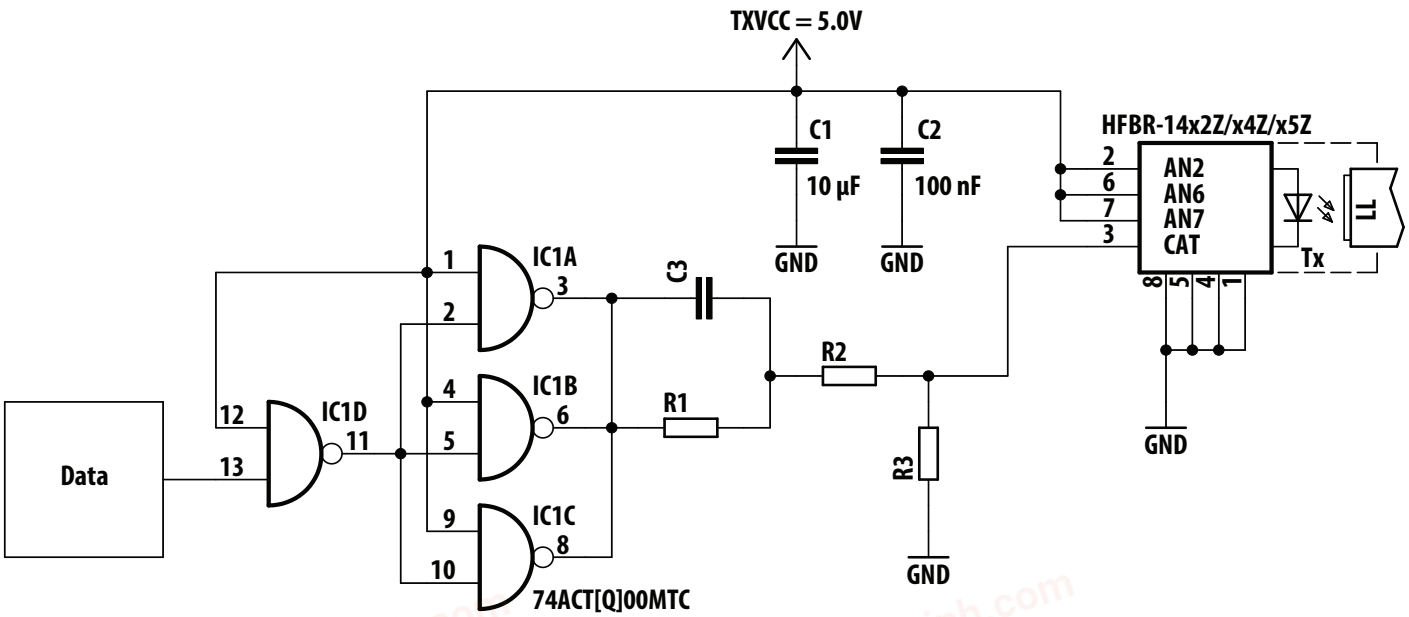

NOTE: The component values shown in the table create a typical driver current of 60 mA (peak). An individual check of the optical output signal quality of the used optic transmitter is recommended during the circuit design.

chanhvinh.com

Figure 12: Test Circuit for Measuring t_r, t_f

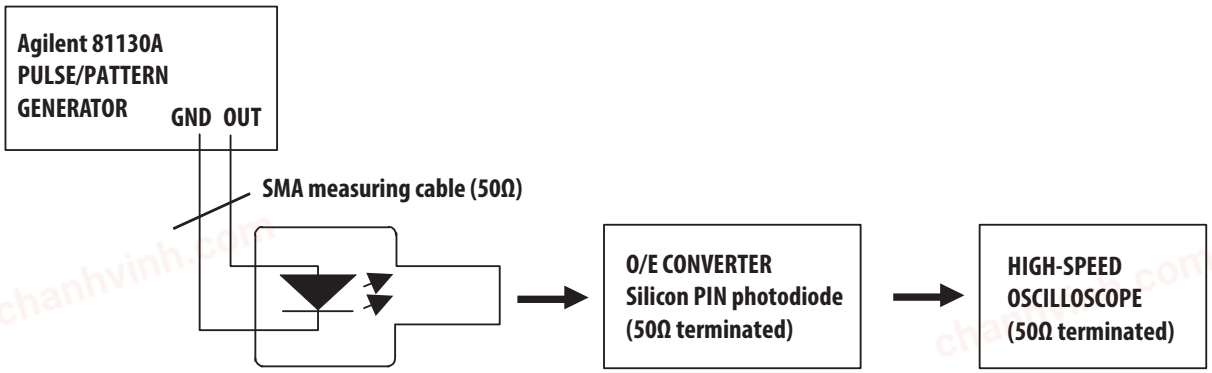

HFBR-24x2Z Low-Cost 5-Mbaud Receiver

Description

The HFBR-24x2Z fiber-optic receiver is designed to operate with the Broadcom HFBR-14xxZ fiber-optic transmitter and 50/125-µm, 62.5/125-µm, 100/140-µm, and 200-µm plastic-clad silica (PCS) fiber-optic cable. Consistent coupling into the receiver is ensured by the lensed optical system (Figure 1). The response does not vary with fiber size ≤ 0.100 µm.

The HFBR-24x2Z receiver incorporates an integrated photo IC containing a photodetector and dc amplifier driving an open-collector Schottky output transistor. The HFBR-24x2Z is designed for direct interfacing to popular logic families. The absence of an internal pull-up resistor allows the open-collector output to be used with logic families such as CMOS requiring voltage excursions much higher than V_{CC}.

Both the open-collector Data output Pin 6 and V_{CC} Pin 2 are referenced to Com Pins 3 and 7. The Data output allows busing, strobing and wired OR circuit configurations. The transmitter is designed to operate from a single +5V supply. It is essential that a bypass capacitor (100 nF ceramic) be connected from Pin 2 (V_{CC}) to Pin 3 (circuit common) of the receiver.

Housed Product

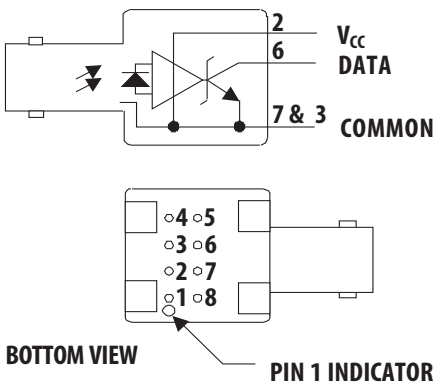

PIN	FUNCTION
1[1]	NC
2	V_{CC} (5V)
3[2]	COMMON
4[1]	NC
5[1]	NC
6	DATA
7[2]	COMMON
8[1]	NC

NOTES:
1. PINS 1, 4, 5, AND 8 ARE ELECTRICALLY CONNECTED.
2. PINS 3 AND 7 ARE ELECTRICALLY CONNECTED TO THE HEADER.

chanhvinh.com

Absolute Maximum Ratings

Parameter	Symbol	Min.	Max.	Units	Reference
Storage Temperature	T_S	–55	+85	°C	
Operating Temperature	T_A	–40	+85	°C	
Lead Soldering Cycle					Note [a]
Temperature	—	—	+260	°C	
Time	—	—	10	seconds	
Supply Voltage	V_{CC}	–0.5	+7.0	V	
Output Current	I_O	—	25	mA	
Output Voltage	V_O	–0.5	+18.0	V	
Output Collector Power Dissipation	PO_{AV}	—	40	mW	
Fan Out (TTL)	N	—	5	—	Note [b]

a. 2.0 mm from where leads enter case.

b. 8-mA load (5 × 1.6 mA), RL = 560Ω.

Electrical/Optical Characteristics

–40°C to + 85°C unless otherwise specified. Fiber sizes with core diameter ≤ 100 µm and N/A ≤ 0.35, 4.75V ≤ V_{CC} ≤ 5.25V.

Parameter	Symbol	Min.	Typ.[a]	Max.	Units	Conditions	Reference
High Level Output Current	I_{OH}	—	5	250	µA	V_O = 18V, P_R < –40 dBm	
Low Level Output Voltage	V_{OL}	—	0.4	0.5	V	I_O = 8 mA, P_R > –24 dBm	
High Level Supply Current	I_{CCH}	—	3.5	6.3	mA	V_{CC} = 5.25V, P_R < –40 dBm	
Low Level Supply Current	I_{CCL}	—	6.2	10	mA	V_{CC} = 5.25V, P_R > –24 dBm	
Equivalent NA	NA	—	0.50	—	—	—	
Optical Port Diameter	D	—	400	—	µm	—	Note [b]

a. Typical data at T_A = +25°C, V_{CC} = 5.0VDC.

b. D is the effective diameter of the detector image on the plane of the fiber face. The numerical value is the product of the actual detector diameter and the lens magnification.

chanhvinh.com

Dynamic Characteristics

–40°C to + 85°C unless otherwise specified; 4.75V ≤ V_{CC} ≤ 5.25V; BER ≤ 10^{-9}.

Parameter	Symbol	Min.	Typ.[a]	Max.	Units	Conditions	Reference
Peak Optical Input Power Logic Level HIGH	P_{RH}	—	—	–40 0.1	dBm peak µW peak	λ_P = 820 nm	Note [b]
Peak Optical Input Power Logic Level LOW	P_{RL}	–25.4 2.9	—	–9.2 120	dBm peak µW peak	T_A = +25°C, I_{OL} = 8 mA	Note [b]
		–24.0 4.0	—	–10.0 100	dBm peak µW peak	T_A = –40°C to +85°C, I_{OL} = 8 mA	
Propagation Delay LOW to HIGH	t_{PLHR}	—	65	—	ns	T_A = +25°C, P_R = –21 dBm, Data Rate = 5 Mbaud	Note [c]
Propagation Delay HIGH to LOW	t_{PHLR}	—	49	—	ns		

a. Typical data at T_A = +25°C, V_{CC} = 5.0VDC.

b. Measured at the end of 100/140-µm fiber-optic cable with large area detector.

c. Propagation delay through the system is the result of several sequentially occurring phenomena. Consequently, it is a combination of data-rate-limiting effects and of transmission-time effects. Because of this, the data-rate limit of the system must be described in terms of time differentials between delays imposed on falling and rising edges. As the cable length is increased, the propagation delays increase at 5 ns per meter of length. Data rate, as limited by pulse width distortion, is not affected by increasing cable length if the optical power level at the receiver is maintained.

CAUTION! The small junction sizes inherent to the design of these components increase the components' susceptibility to damage from electrostatic discharge (ESD). It is advised that normal static precautions be taken in handling and assembly of these components to prevent damage and/or degradation which may be induced by ESD.

chanhvinh.com

HFBR-24x6Z Low-Cost 125-MHz Receiver

Description

The HFBR-24x6Z fiber-optic receiver is designed to operate with the Broadcom HFBR-14xxZ fiber-optic transmitters and 50/125-µm, 62.5/125-µm, 100/140-µm, and 200-µm plastic-clad silica (PCS) fiber-optic cable. Consistent coupling into the receiver is ensured by the lensed optical system (Figure 1). The response does not vary with fiber size for core diameters of 100 µm or less.

The receiver output is an analog signal which allows follow-on circuitry to be optimized for a variety of distance/data rate requirements. Low-cost external components can be used to convert the analog output to logic compatible signal levels for various data formats and data rates up to 175 Mbaud. This distance/data rate trade-off results in increased optical power budget at lower data rates, which can be used for additional distance or splices.

The HFBR-24x6Z receiver contains a PIN photodiode and low noise transimpedance preamplifier integrated circuit. The HFBR-24x6Z receives an optical signal and converts it to an analog voltage. The output is a buffered emitter follower. Because the signal amplitude from the HFBR-24x6Z receiver is much larger than from a simple PIN photodiode, it is less susceptible to EMI, especially at high signaling rates. For very noisy environments, the conductive or metal port option is recommended. A receiver dynamic range of 23 dB over temperature is achievable, assuming a bit error rate (BER) of 10^{-9}.

The frequency response is typically DC to 125 MHz. Although the HFBR-24x6Z is an analog receiver, it is compatible with digital systems.

Figure 14 shows the recommended AC-coupled receiver circuit. A 10Ω resistor must be connected between pin 6 and the power supply, and a 100-nF ceramic bypass capacitor must be connected between the power supply and ground. In addition, pin 6 should be filtered to protect the receiver from noisy host systems. Refer to Application Note 1065 for details.

Figure 13: Simplified Schematic Diagram

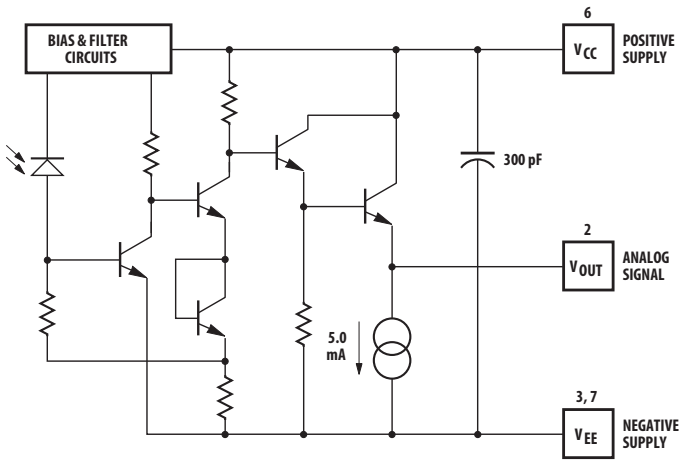

Housed Product

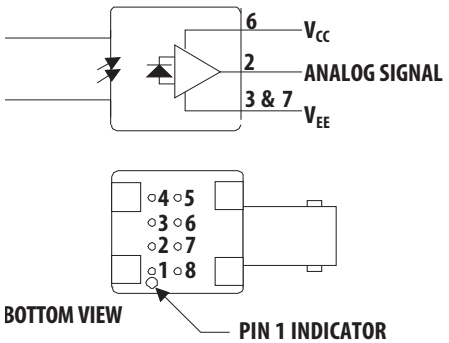

PIN	FUNCTION
1[1]	NC
2	SIGNAL
3[2]	V_{EE}
4[1]	NC
5[1]	NC
6	V_{CC}
7[2]	V_{EE}
8[1]	NC

NOTES:
1. PINS 1, 4, 5, AND 8 ARE ISOLATED FROM THE INTERNAL CIRCUITRY, BUT ARE CONNECTED TO EACH OTHER.
2. PINS 3 AND 7 ARE ELECTRICALLY CONNECTED TO THE HEADER.

chanhvinh.com

Absolute Maximum Ratings

Parameter	Symbol	Min.	Max.	Units	Reference
Storage Temperature	T_S	–55	+85	°C	
Operating Temperature	T_A	–40	+85	°C	
Lead Soldering Cycle Temperature Time	 — —	 — —	 +260 10	 °C seconds	Note [a]
Supply Voltage	V_{CC}	–0.5	+6.0	V	
Output Current	I_O	—	25	mA	
Signal Pin Voltage	V_{SIG}	–0.5	V_{CC}	V	

a. 2.0 mm from where leads enter case.

Electrical/Optical Characteristics

–40°C to +85°C; 4.75V ≤ Supply Voltage ≤ 5.25V, R_{LOAD} = 511Ω, fiber sizes with core diameter ≤ 100 µm, and NA ≤ 0.35, unless otherwise specified.

Parameter	Symbol	Min.	Typ.[a]	Max.	Units	Conditions	Reference
Responsivity	R_P	5.3	7	9.6	mV/µW	T_A = +25°C at 820 nm, 50 MHz	Notes [b, c] Figure 18
		4.5	—	11.5	mV/µW	T_A = –40°C to +85°C at 820 nm, 50 MHz	
RMS Output Noise Voltage	V_{NO}	—	0.40	0.59	mV	Bandwidth filtered at 75 MHz, P_R = 0 µW	Note [d] Figure 15
				0.70	mV	Unfiltered bandwidth P_R = 0 µW	
Equivalent Input Optical Noise Power (RMS)	P_N	—	–43.00 0.050	–41.4 0.065	dBm µW	Bandwidth filtered at 75 MHz	
Optical Input Power (Overdrive)	P_R	—	—	–7.6 175	dBm peak µW peak	T_A = +25°C	Note [e] Figure 16
				–8.2 150	dBm peak µW peak	T_A = –40°C to +85°C	
Output Impedance	Z_O	—	30	—	Ω	Test Frequency = 50 MHz	
dc Output Voltage	$V_{O\ dc}$	V_{cc} – 4.2	V_{cc} – 3.1	V_{cc} – 2.4	V	P_R = 0 µW	
Power Supply Current	I_{EE}	—	9	15	mA	R_{LOAD} = 510Ω	
Equivalent NA	NA	—	0.35	—	—	—	
Equivalent Diameter	D	—	324	—	µm	—	Note [f]

a. Typical specifications are for operation at T_A = +25°C and V_{CC} = +5V DC.

b. For 200-µm PCS fibers, typical responsivity will be 6 mV/mW. Other parameters will change as well.

c. Pin #2 should be AC-coupled to a load 510Ω. Load capacitance must be less than 5 pF.

d. Measured with a 3-pole Bessel filter with a 75-MHz, –3-dB bandwidth.

e. Overdrive is defined at PWD = 2.5 ns.

f. D is the effective diameter of the detector image on the plane of the fiber face. The numerical value is the product of the actual detector diameter and the lens magnification.

chanhvinh.com

Dynamic Characteristics

–40°C to +85°C; 4.75V ≤ Supply Voltage ≤ 5.25V; R_{LOAD} = 511Ω, C_{LOAD} = 5 pF, unless otherwise specified.

Parameter	Symbol	Min.	Typ.[a]	Max.	Units	Conditions	Reference
Rise/Fall Time 10% to 90%	t_r, t_f	—	3.3	6.3	ns	P_R = 100 µW peak	Figure 17
Pulse Width Distortion	PWD	—	0.4	2.5	ns	P_R = 150 µW peak	Note [b] Figure 16
Overshoot	—	—	2	—	%	P_R = 5 µW peak, t_r = 1.5 ns	Note [c]
Bandwidth (Electrical)	BW	—	125	—	MHz	–3 dB Electrical	
Bandwidth – Rise Time Product	—	—	0.41	—	Hz × s	—	Note [d]

a. Typical specifications are for operation at T_A = +25°C and V_{CC} = +5V DC.

b. Measured with a 10-ns pulse width, 50% duty cycle, at the 50% amplitude point of the waveform.

c. Percent overshoot is defined as shown in the following equation:

$$\left(\frac{V_{PK} - V_{100\%}}{V_{100\%}}\right) \times 100\%$$

d. The conversion factor for the rise time to bandwidth is 0.41 because the HFBR-24x6Z has a second order bandwidth limiting characteristic.

Figure 14: Recommended AC-Coupled Receiver Circuit

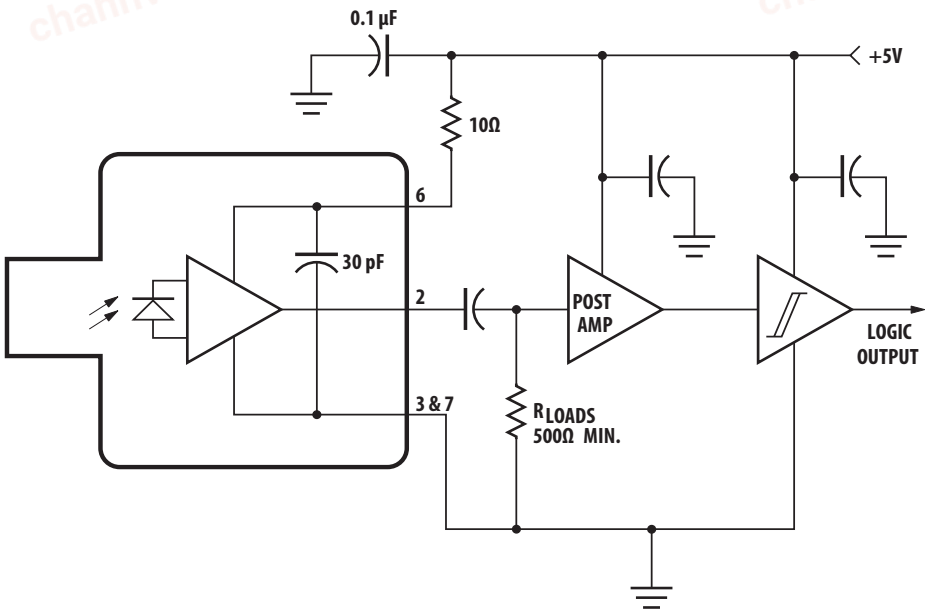

CAUTION! The small junction sizes inherent to the design of these components increase the components' susceptibility to damage from electrostatic discharge (ESD). It is advised that normal static precautions be taken in handling and assembly of these components to prevent damage and/or degradation which may be induced by ESD.

chanhvinh.com

Figure 15: Typical Spectral Noise Density vs. Frequency

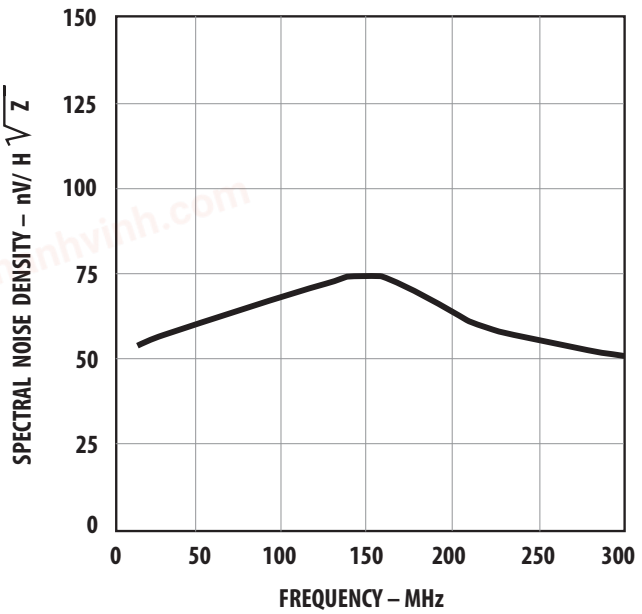

Figure 16: Typical Pulse Width Distortion vs. Peak Input Power

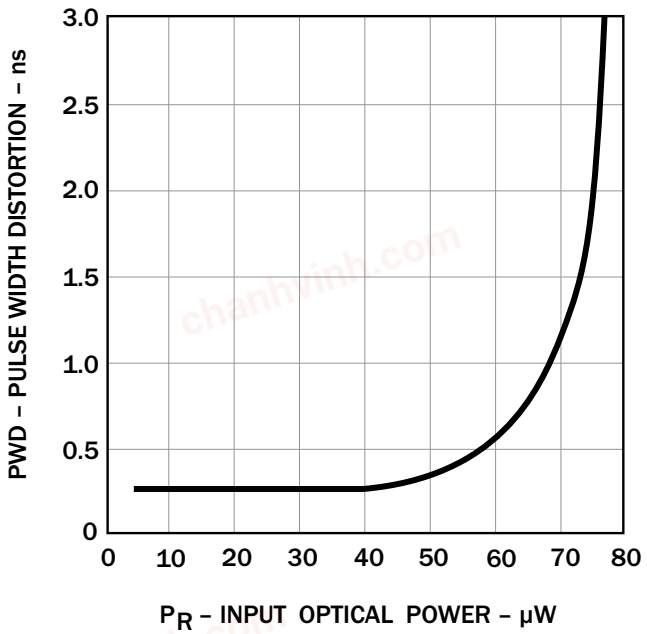

Figure 17: Typical Rise and Fall Times vs. Temperature

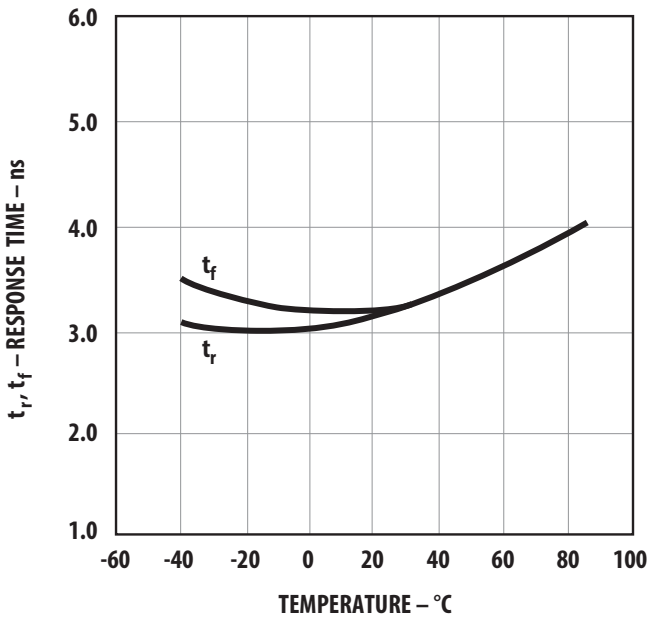

Figure 18: Typical Receiver Spectral Response Normalized to 820 nm

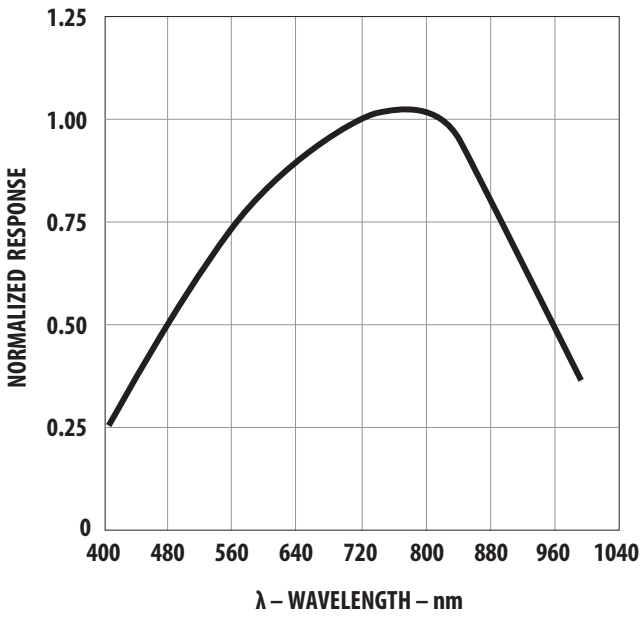

chanhvinh.com

Copyright © 2017–2025 Broadcom. All Rights Reserved. The term “Broadcom” refers to Broadcom Inc. and/or its subsidiaries. For more information, go to www.broadcom.com. All trademarks, trade names, service marks, and logos referenced herein belong to their respective companies.

Broadcom reserves the right to make changes without further notice to any products or data herein to improve reliability, function, or design. Information furnished by Broadcom is believed to be accurate and reliable. However, Broadcom does not assume any liability arising out of the application or use of this information, nor the application or use of any product or circuit described herein, neither does it convey any license under its patent rights nor the rights of others.

BROADCOM®