chanhvinh.com

BROADCOM®

Data Sheet

HFBR-0500Z Series

Versatile Link Fiber-Optic Connection

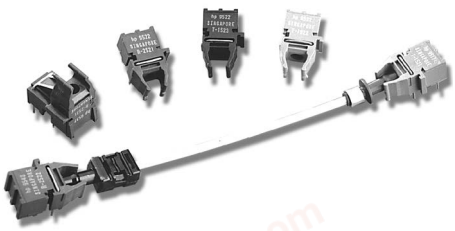

Description

The Versatile Link series is a complete family of fiber-optic link components for applications that require a low-cost solution. The HFBR-0500Z series includes transmitters, receivers, connectors, and cables specified for easy design. This series of components is ideal for solving problems with voltage isolation/insulation, EMI/RFI immunity, or data security. The optical link design is simplified by the logic-compatible receivers and complete specifications for each component. The key optical and electrical parameters of links configured with the HFBR-0500Z family are fully guaranteed from 0° to 70°C.

A wide variety of package configurations and connectors provide the designer with numerous mechanical solutions to meet application requirements. The transmitter and receiver components have been designed for use in high-volume/ low-cost assembly processes such as auto-insertion and wave soldering.

Transmitters incorporate a 660-nm LED. Receivers include a monolithic DC-coupled, digital IC receiver with an open collector Schottky output transistor. An internal pull-up resistor is available for use in the HFBR-25X1Z/2Z/4Z receivers. A shield has been integrated into the receiver IC to provide additional, localized noise immunity.

Internal optics have been optimized for use with 1-mm diameter polymer optical fiber. Versatile Link specifications incorporate all connector interface losses. Therefore, optical calculations for common link applications are simplified.

Features

- RoHS compliant
- Low-cost fiber-optic components
- Enhanced digital links: DC to 5 Mbaud
- Extended distance links up to 120m at 40 Kbaud
- Low-current link: 6-mA peak supply current
- Horizontal and vertical mounting
- Interlocking feature
- High noise immunity
- Easy connectoring: simplex, duplex, and latching connectors
- Flame retardant
- Transmitters with a 660-nm red LED for easy visibility
- Compatible with standard TTL circuitry

Applications

- Reduction of lightning/voltage transient susceptibility
- Motor controller triggering
- Data communications and local area networks
- Electromagnetic compatibility (EMC) for regulated systems such as FCC, VDE, and CSA
- Tempest-secure data processing equipment
- Isolation in test and measurement instruments
- Error-free signaling for industrial and manufacturing equipment
- Automotive communications and control networks
- Noise-immune communication in audio and video equipment

chanhvinh.com

HFBR-0500Z Series Part Number Guide

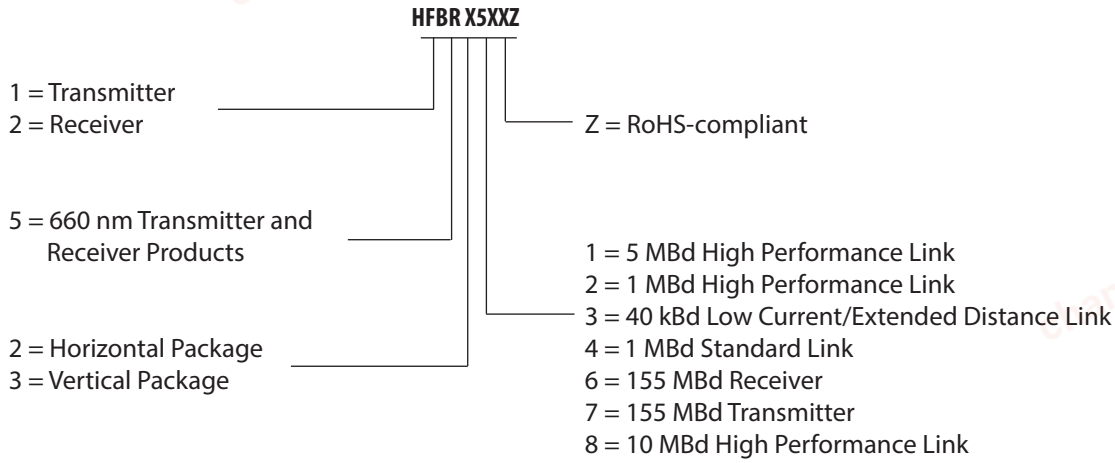

Link Selection Guide

(Links specified from 0°C to 70°C, for polymer optical fiber unless specified.)

Signal Rate	Distance (m) 25°C	Distance (m)	Transmitter	Receiver
40 Kbaud	120	110	HFBR-1523Z	HFBR-2523Z
1 Mbaud	20	10	HFBR-1524Z	HFBR-2524Z
1 Mbaud	55	45	HFBR-1522Z	HFBR-2522Z
5 Mbaud	30	20	HFBR-1521Z	HFBR-2521Z

chanhvinh.com

Application Literature

Versatile Link Family: Application Note 1035 (AV02-0730EN).

Package and Handling Information

The compact Versatile Link package is made of a flame-retardant VALOX UL 94 V-0 material (UL file # E121562) and uses the same pad layout as a standard, 8-pin dual-inline package. Vertical and horizontal mountable parts are available. These low-profile Versatile Link packages are stackable and are enclosed to provide a dust-resistant seal. Snap action simplex, simplex latching, duplex, and duplex latching connectors are offered with simplex or duplex cables.

Package Orientation

Performance and pinouts for the vertical and horizontal packages are identical. To provide additional attachment support for the vertical Versatile Link housing, the designer has the option of using a self-tapping screw through a printed circuit board into a mounting hole at the bottom of the package. For most applications, this option is not necessary.

Package Housing Color

Versatile Link components and simplex connectors are color coded to eliminate confusion when making connections. Receivers are blue, and transmitters are gray, except for the HFBR-15X3Z transmitter, which is black.

Handling

Versatile Link components are auto-insertable. When wave soldering is performed with Versatile Link components, the optical port plug should be left in to prevent contamination of the port. Do not use reflow solder processes (for example, infrared reflow or vapor-phase reflow). Nonhalogenated water-soluble fluxes (for example, 0% chloride), not rosin-based fluxes, are recommended for use with Versatile Link components.

Versatile Link components are moisture sensitive devices and are shipped in a moisture sealed bag. If the components are exposed to air for an extended period of time, they may require a baking step before the soldering process. Refer to the special labeling on the shipping tube for details.

Recommended Chemicals for Cleaning and Degreasing

- Alcohols: methyl, isopropyl, isobutyl
- Aliphatics: hexane, heptane
- Other: soap solution, naphtha

Do not use partially halogenated hydrocarbons, such as 1,1,1 trichloroethane, or ketones, such as MEK, acetone, chloroform, ethyl acetate, methylene dichloride, phenol, methylene chloride, or N-methylpyrolldone. Also, Broadcom does not recommend the use of cleaners that use halogenated hydrocarbons because of their potential environmental harm.

chanhvinh.com

Mechanical Dimensions

Horizontal Modules

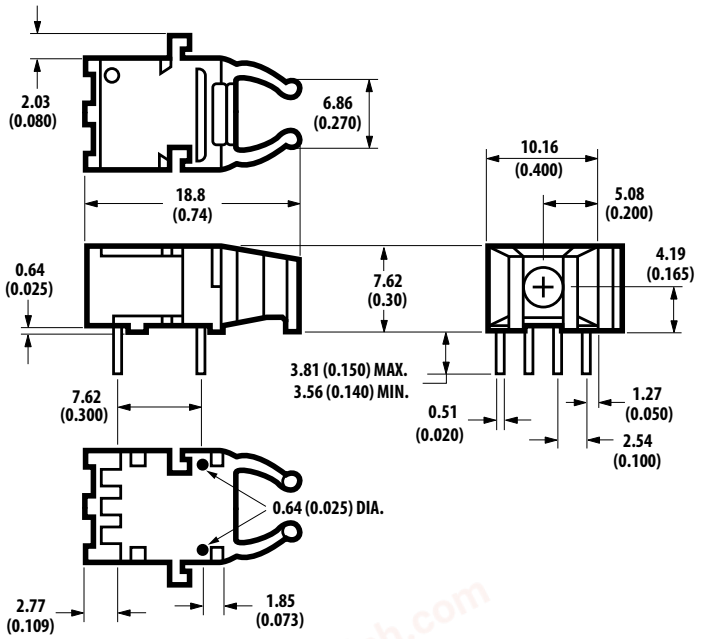

Vertical Modules

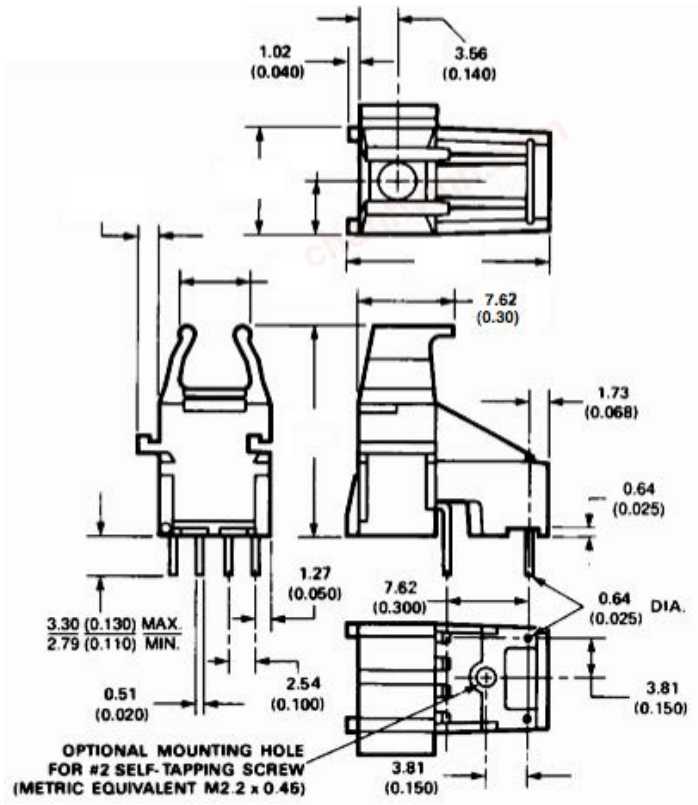

chanhvinh.com

Versatile Link Printed Board Layout Dimensions

Horizontal Module

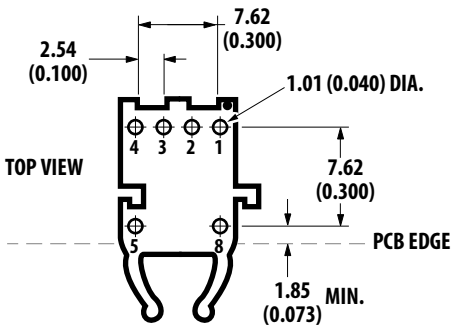

DIMENSIONS IN MILLIMETERS (INCHES).

Vertical Module

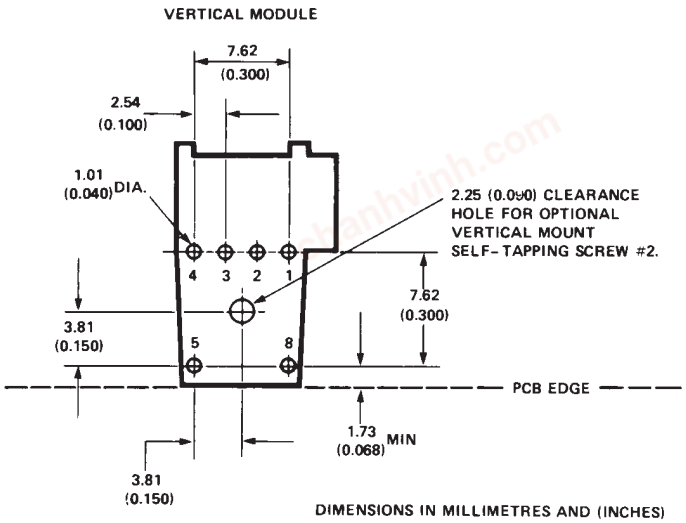

DIMENSIONS IN MILLIMETRES AND (INCHES)

chanhvinh.com

Interlocked (Stacked) Assemblies

Horizontal packages may be stacked by placing units with pins facing upward. Initially engage the interlocking mechanism by sliding the L bracket body from above into the L slot body of the lower package. Use a straight edge, such as a ruler, to bring all stacked units into uniform alignment. This technique prevents potential harm that could occur to fingers and hands of assemblers from the package pins. Stacked horizontal packages can be disengaged if necessary. Repeated stacking and unstacking causes no damage to individual units.

To stack vertical packages, hold one unit in each hand, with the pins facing away and the optical ports on the bottom. Slide the L bracket unit into the L slot unit. The straight edge used for horizontal package alignment is not needed.

It is recommended to interlock (stack) no more than four compatible housings together.

Figure 1: Interlocked (Stacked) Horizontal or Vertical Packages

Stacking Horizontal Modules

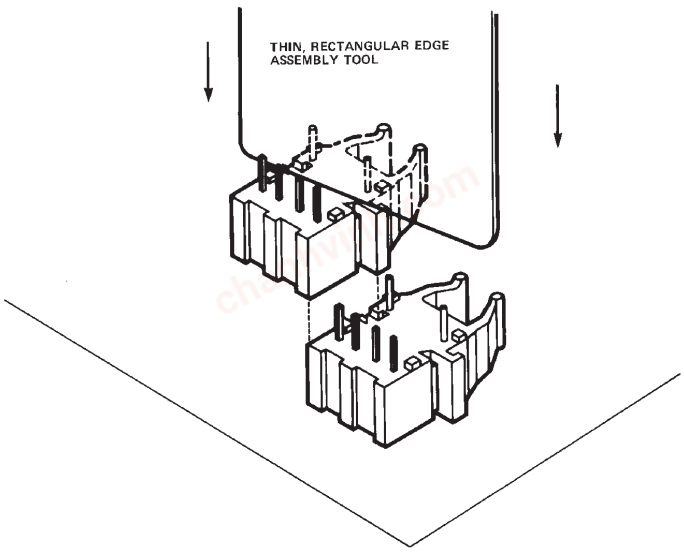

Stacking Vertical Modules

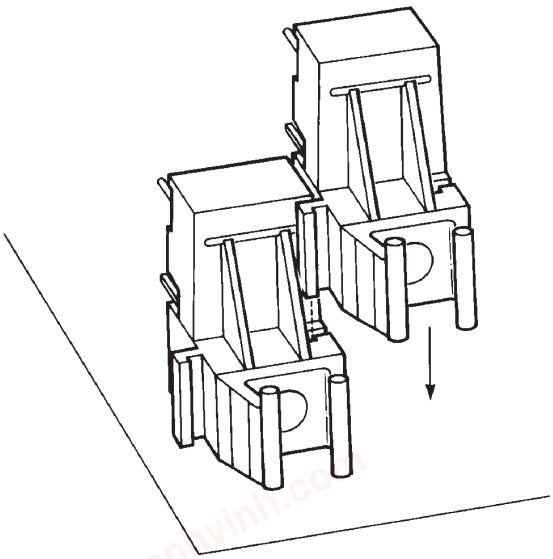

chanhvinh.com

5-Mbaud Link (HFBR-15X1Z/25X1Z)

System performance 0°C to 70°C, unless otherwise specified.

	Parameter	Symbol	Min.	Typ.	Max.	Units	Conditions	Reference
High-Performance 5 Mbaud	Data Rate	—	dc	—	5	Mbaud	BER ≤ 10^{-9}, PRBS: 2^7–1	—
	Link Distance (Standard Cable)	d	19 27	 48	—	m m	I_{Fdc} = 60 mA I_{Fdc} = 60 mA, 25°C	Figure 3 Notes a, b
	Link Distance (Improved Cable)	d	22 27	 53	—	m m	I_{Fdc} = 60 mA I_{Fdc} = 60 mA, 25°C	Figure 4 Notes a, b
	Propagation Delay	t_{PLH} t_{PHL}	—	80 50	140 140	ns ns	R_L = 560Ω, C_L = 30 pF Fiber length = 0.5m –21.6 ≤ P_R ≤ –9.5 dBm	Figures 5, 8 Notes b, c, d
	Pulse Width Distortion t_{PLH}-t_{PHL}	t_D	—	30	—	ns	P_R = –15 dBm R_L = 560Ω, C_L = 30 pF	Figures 5, 7 Note b

a. The estimated typical link life expectancy at 40°C exceeds 10 years at 60 mA.

b. Optical link performance is guaranteed only with the HFBR-15x1Z transmitter and the HFBR-25x1Z receiver.

c. The propagation delay for one meter of cable is typically 5 ns.

d. Typical propagation delay is measured at P_R = –15 dBm.

Figure 2: Typical 5-Mbaud Interface Circuit

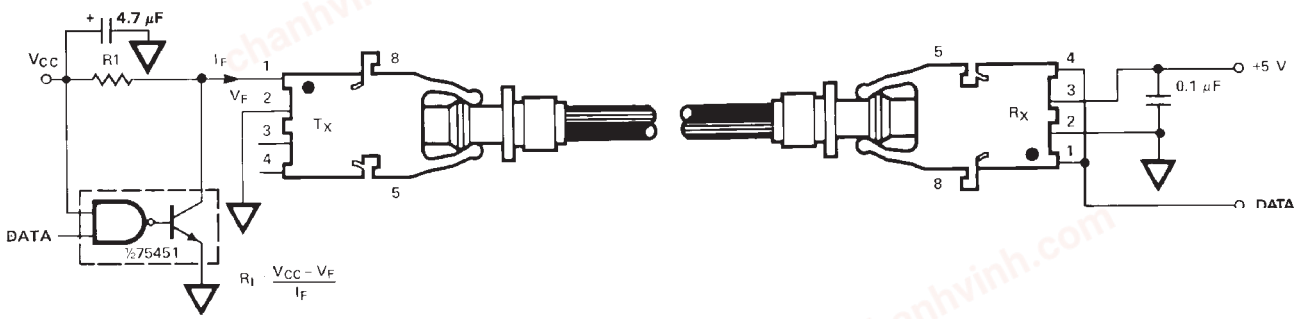

Figure 3: Guaranteed System Performance with Standard Cable (HFBR-15X1Z/25X1Z)

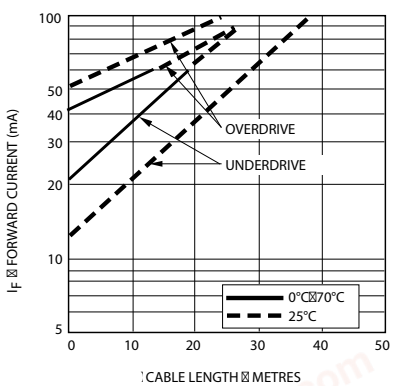

Figure 4: Guaranteed System Performance with Improved Cable (HFBR-15X1Z/25X1Z)

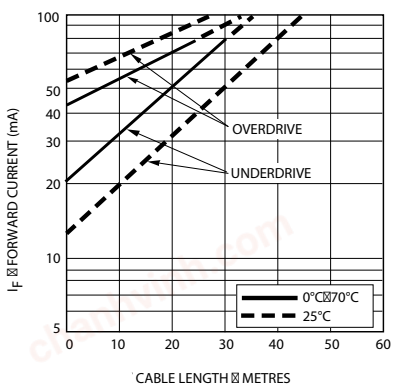

chanhvinh.com

Figure 5: 5-Mbaud Propagation Delay Test Circuit

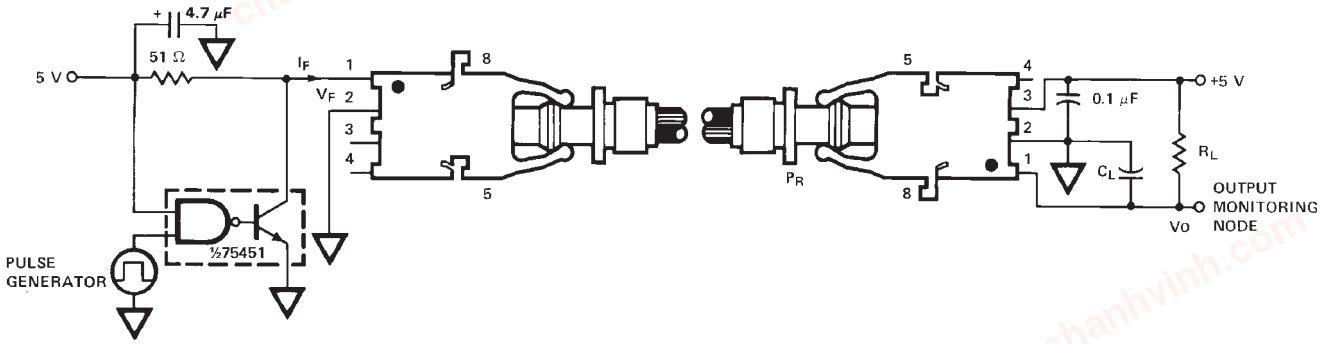

Figure 6: Propagation Delay Test Waveforms

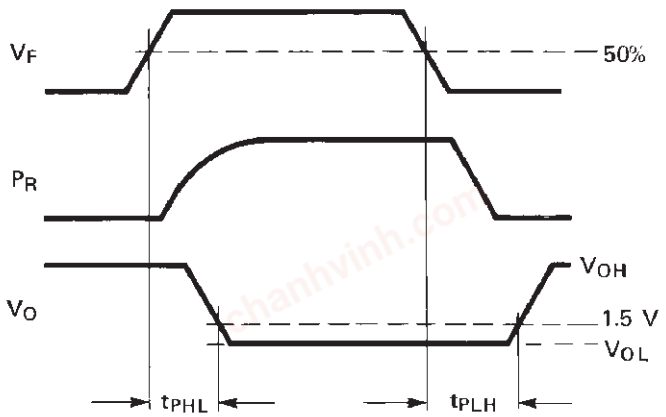

Figure 7: Typical Link Pulse Width Distortion vs. Optical Power

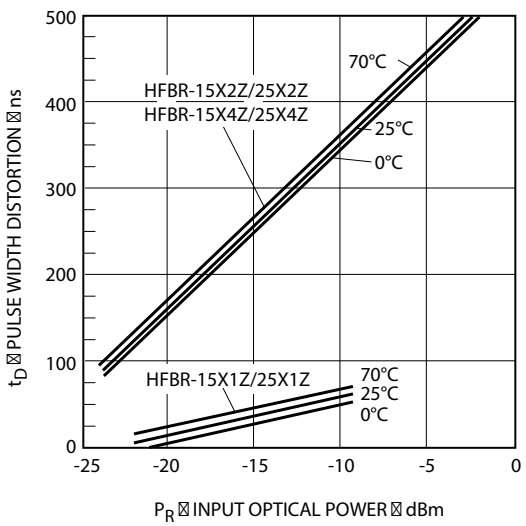

Figure 8: Typical Link Propagation Delay vs. Optical Power

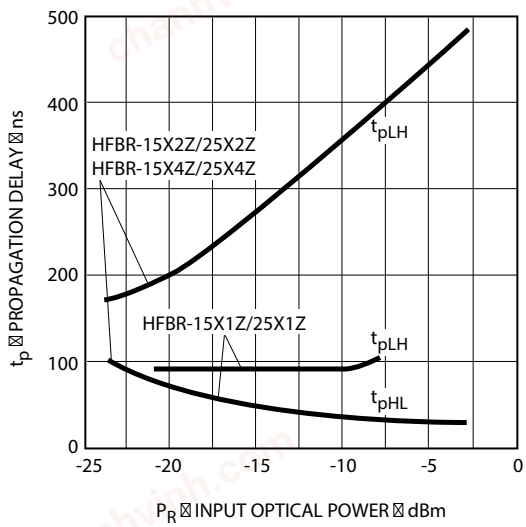

chanhvinh.com

HFBR-15X1Z Transmitter

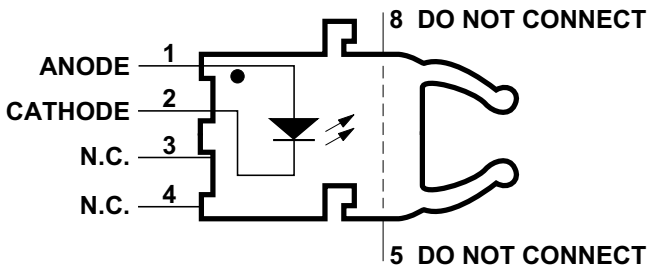

Pin No.	Function
1	Anode
2	Cathode
3	Open
4	Open
5	Do not connect
8	Do not connect

NOTE: Pins 5 and 8 are for mounting and retaining purposes only. Do not electrically connect these pins.

Absolute Maximum Ratings

Parameter		Symbol	Min.	Max.	Units	Reference
Storage Temperature		T_S	–40	+85	°C	—
Operating Temperature		T_A	–40	+85	°C	—
Lead Soldering Cycle	Temperature	—	—	260	°C	Notes [a, b]
	Time	—	—	10	sec	
Forward Input Current		I_{FPK}	—	1000	mA	Notes [c, d]
		I_{Fdc}	—	80		—
Reverse Input Voltage		V_{BR}	—	5	V	—

a. 1.6 mm below the seating plane. To guard against solder process fluctuations, the recommended nominal soldering time is 5 seconds.

b. The moisture sensitivity level (MSL) is 3.

c. The recommended operating range is between 10 mA and 750 mA.

d. 1-µs pulse, 20-µs period.

NOTE: All HFBR-15XXZ LED transmitters are classified as IEC 825-1 Accessible Emission Limit (AEL) Class 1 based upon the proposed draft that went into effect on January 1, 1997. AEL Class 1 LED devices are considered eye safe. Contact your local Broadcom sales representative for more information.

chanhvinh.com

Transmitter Electrical/Optical Characteristics

0°C to 70°C, unless otherwise specified.

Parameter	Symbol	Min.	Typ.	Max.	Units	Conditions	Reference
Transmitter Output Optical Power	P_T	–16.5	—	–7.6	dBm	I_{Fdc} = 60 mA	Notes a, b
		–14.3	—	–8.0	dBm	I_{Fdc} = 60 mA, 25°C	
Output Optical Power Temperature Coefficient	$\Delta P_T/\Delta T$	—	–0.85	—	%/°C	—	—
Peak Emission Wavelength	λ_{PK}	—	660	—	nm	—	—
Forward Voltage	V_F	1.45	1.67	2.02	V	I_{Fdc} = 60 mA	—
Forward Voltage Temperature Coefficient	$\Delta V_F/\Delta T$	—	–1.37	—	mV/°C	—	Figure 9
Effective Diameter	D	—	1	—	mm	—	—
Numerical Aperture	NA	—	0.5	—		—	—
Reverse Input Breakdown Voltage	V_{BR}	5.0	11.0	—	V	I_{Fdc} = 10 µA, T_A = 25°C	—
Diode Capacitance	C_O	—	86	—	pF	V_F = 0V, f = 1 MHz	—
Rise Time	t_r	—	80	—	ns	10% to 90%, I_F = 60 mA	Note c
Fall Time	t_f	—	40	—	ns		

a. Measured at the end of 0.5m standard fiber-optic cable with a large area detector.

b. Optical power, P (dBm) = 10 Log [P(µW)/1000 µW].

c. Rise and fall times are measured with a voltage pulse driving the transmitter and a series connected 50Ω load. A wide-bandwidth optical-to-electrical waveform analyzer, terminated to a 50Ω input of a wide-bandwidth oscilloscope, is used for this response time measurement.

Figure 9: Typical Forward Voltage vs. Drive Current

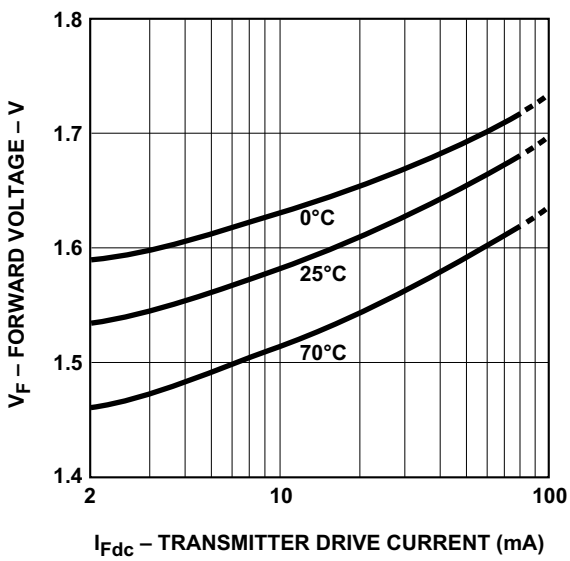

Figure 10: Normalized Typical Output Power vs. Drive Current

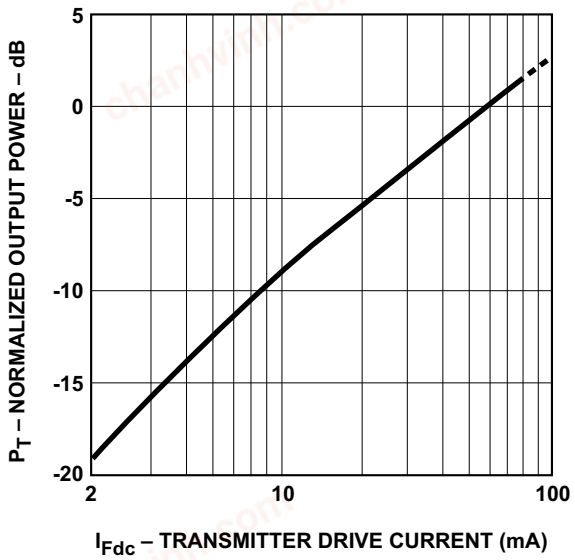

chanhvinh.com

HFBR-25X1Z Receiver

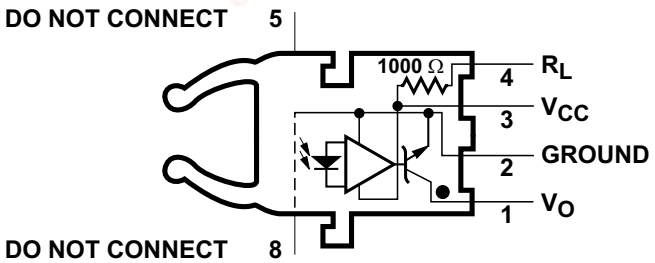

Pin No.	Function
1	V_O
2	Ground
3	V_{CC}
4	R_L
5	Do not connect
8	Do not connect

NOTE: Pins 5 and 8 are for mounting and retaining purposes only. Do not electrically connect these pins.

Absolute Maximum Ratings

Parameter		Symbol	Min.	Max.	Units	Reference
Storage Temperature		T_S	–40	+85	°C	—
Operating Temperature		T_A	–40	+85	°C	—
Lead Soldering Cycle	Temperature	—	—	260	°C	Notes a, b
	Time	—	—	10	sec	
Supply Voltage		V_{CC}	–0.5	7	V	Note c
Output Collector Current		I_{OAV}	—	25	mA	—
Output Collector Power Dissipation		P_{OD}	—	40	mW	—
Output Voltage		V_O	–0.5	18	V	—
Pull-Up Voltage		V_P	–5	V_{CC}	V	—
Fan-Out (TTL)		N	—	5	—	—

a. 1.6 mm below the seating plane. To guard against solder process fluctuations, the recommended nominal soldering time is 5 seconds.

b. The moisture sensitivity level (MSL) is 3.

c. It is essential that a 0.1-µF bypass capacitor be connected from pin 2 to pin 3 of the receiver. Total lead length between both ends of the capacitor and the pins should not exceed 20 mm.

chanhvinh.com

Receiver Electrical/Optical Characteristics

0°C to 70°C, 4.75V ≤ V_{CC} ≤ 5.25V, unless otherwise specified.

Parameter	Symbol	Min.	Typ.	Max.	Units	Conditions	Reference
Input Optical Power Level for Logic "0"	$P_{R(L)}$	–21.6	—	–9.5	dBm	V_{OL} = 0.5V I_{OL} = 8 mA	Notes a, b, c, d
		–21.6	—	–8.7		V_{OL} = 0.5V I_{OL} = 8 mA, 25°C	
Input Optical Power Level for Logic "1"	$P_{R(H)}$	—	—	–43	dBm	V_{OL} = 5.25V I_{OH} ≤ 250 µA	Notes a, d
High Level Output Current	I_{OH}	—	5	250	µA	V_O = 18V, P_R = 0	Notes d, e
Low Level Output Voltage	V_{OL}	—	0.4	0.5	V	I_{OL} = 8 mA, P_R = $P_{R(L)MIN}$	Notes d, e
High Level Supply Current	I_{CCH}	—	3.5	6.3	mA	V_{CC} = 5.25V, P_R = 0	Notes d, e
Low Level Supply Current	I_{CCL}	—	6.2	10	mA	V_{CC} = 5.25V, P_R = –12.5 dBm	Notes d, e
Effective Diameter	D	—	1	—	mm	—	—
Numerical Aperture	NA	—	0.5	—	—	—	—
Internal Pull-Up Resistor	R_L	680	1000	1700	Ω	—	—

a. Optical flux, P (dBm) = 10 Log [P(µW)/1000 µW].

b. Measured at the end of the fiber-optic cable with a large area detector.

c. Pulsed LED operation at I_F > 80 mA will cause increased link t_{PLH} propagation delay time. This extended t_{PLH} time contributes to increased pulse width distortion of the receiver output signal.

d. Guaranteed only if the optical input signal to the receiver is generated by HFBR-15x1Z, with ideal alignment to the photodiode using 1-mm POF (NA = 0.5).

e. R_L is open.

chanhvinh.com

1-Mbaud Link (High-Performance HFBR-15X2Z/25X2Z, Standard HFBR-15X4Z/25X4Z)

System performance under the recommended operating conditions, unless otherwise specified.

	Parameter	Symbol	Min.	Typ.	Max.	Units	Conditions	Reference
High-Performance 1 Mbaud	Data Rate	—	dc	—	1	Mbaud	BER ≤10^{-9}, PRBS: 2^7–1	—
	Link Distance (Standard Cable)	d	39 47	70	—	m m	I_{Fdc} = 60 mA I_{Fdc} = 60 mA, 25°C	Figure 14 Notes a, b, c, d
	Link Distance (Improved Cable)	d	45 56	78	—	m m	I_{Fdc} = 60 mA I_{Fdc} = 60 mA, 25°C	Figure 15 Notes a, b, c, d
	Propagation Delay	t_{PLH} t_{PHL}	—	180 100	250 140	ns ns	R_L = 560Ω, C_L = 30 pF l = 0.5m P_R = –24 dBm	Figures 16, 18 Notes c, d, e
	Pulse Width Distortion t_{PLH}-t_{PHL}	t_D	—	80	—	ns	P_R = –24 dBm R_L = 560Ω, C_L = 30 pF	Figures 16, 17 Notes c, d
Standard 1 Mbaud	Data Rate	—	dc	—	1	Mbaud	BER ≤10^{-9}, PRBS: 2^7–1	—
	Link Distance (Standard Cable)	d	8 17	43	—	m m	I_{Fdc} = 60 mA I_{Fdc} = 60 mA, 25°C	Figure 12 Notes a, b, c, d
	Link Distance (Improved Cable)	d	10 19	48	—	m m	I_{Fdc} = 60 mA I_{Fdc} = 60 mA, 25°C	Figure 13 Notes a, b, c, d
	Propagation Delay	t_{PLH} t_{PHL}	—	180 100	250 140	ns ns	R_L = 560Ω, C_L = 30 pF l = 0.5m P_R = –20 dBm	Figures 16, 18 Notes c, d, e
	Pulse Width Distortion t_{PLH}-t_{PHL}	t_D	—	80	—	ns	P_R = –20 dBm R_L = 560Ω, C_L = 30 pF	Figures 16, 17 Notes c, d

a. For I_{FPK} > 80 mA, the duty factor must be such as to keep I_{Fdc} ≤80 mA. In addition, for I_{FPK} > 80 mA, the following rules for pulse width apply:
I_{FPK} ≤ 160 mA: Pulse width ≤ 1 ms
I_{FPK} > 160 mA: Pulse width ≤ 1 µs, period ≥ 20 µs

b. The estimated typical link life expectancy at 40°C exceeds 10 years at 60 mA.

c. Pulsed LED operation at I_{FPK} > 80 mA will cause increased link t_{PLH} propagation delay time. This extended t_{PLH} time contributes to increased pulse width distortion of the receiver output signal.

d. Optical link performance is guaranteed only with the HFBR-15x2Z/4Z transmitter and the HFBR-25x2Z/4Z receiver.

e. The propagation delay for one meter of cable is typically 5 ns.

chanhvinh.com

Figure 11: Required 1-Mbaud Interface Circuit

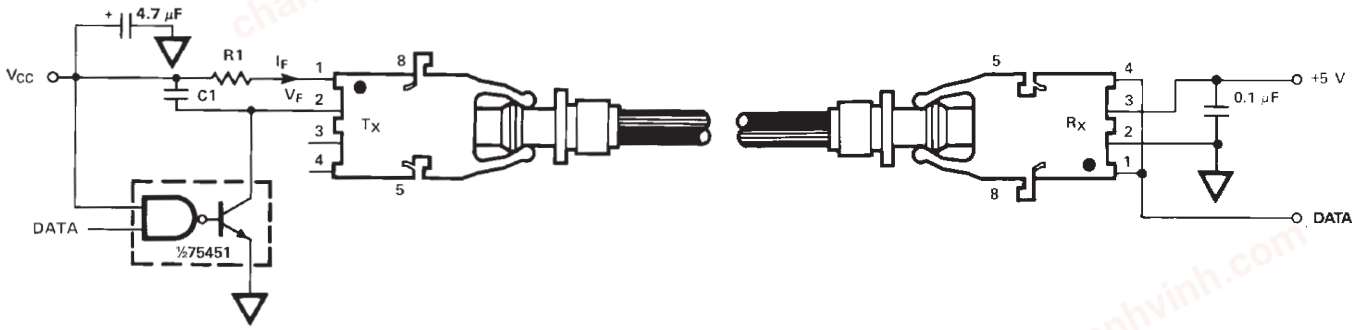

NOTE: The HFBR-25X2Z receiver cannot be overdriven when using the required interface circuit shown in Figure 11.

Figure 12: Guaranteed System Performance for the HFBR-15X4Z/25X4Z Link with Standard Cable

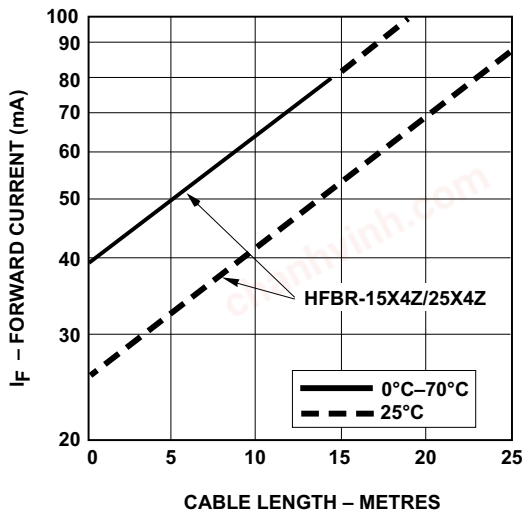

Figure 13: Guaranteed System Performance for the HFBR-15X4Z/25X4Z Link with Improved Cable

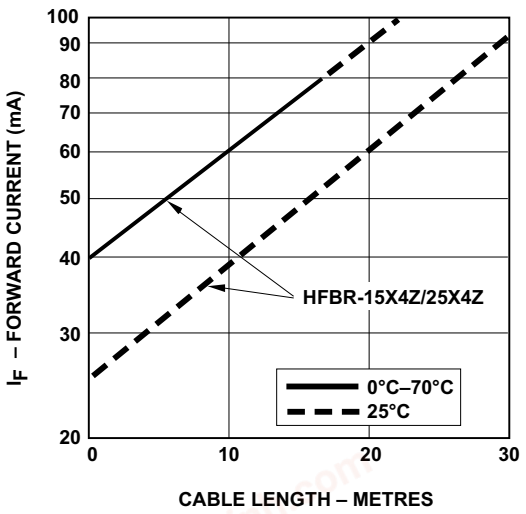

Figure 14: Guaranteed System Performance for the HFBR-15X2Z/25X2Z Link with Standard Cable

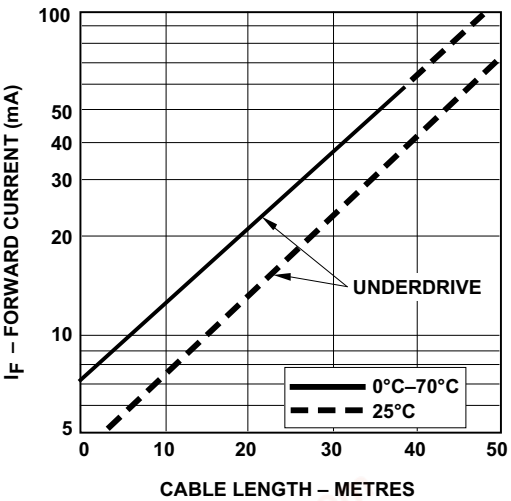

Figure 15: Guaranteed System Performance for the HFBR-15X2Z/25X2Z Link with Improved Cable

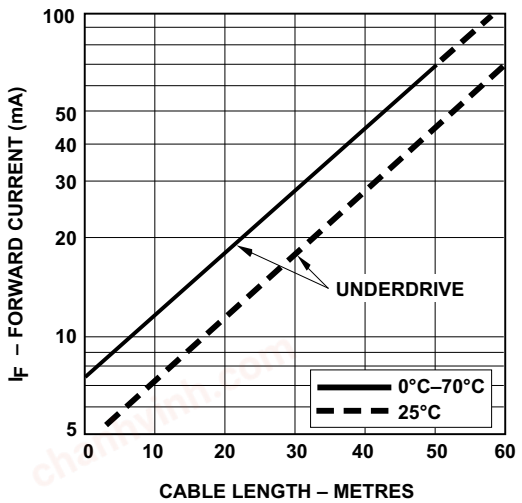

chanhvinh.com

Figure 16: 1-Mbaud Propagation Delay Test Circuit

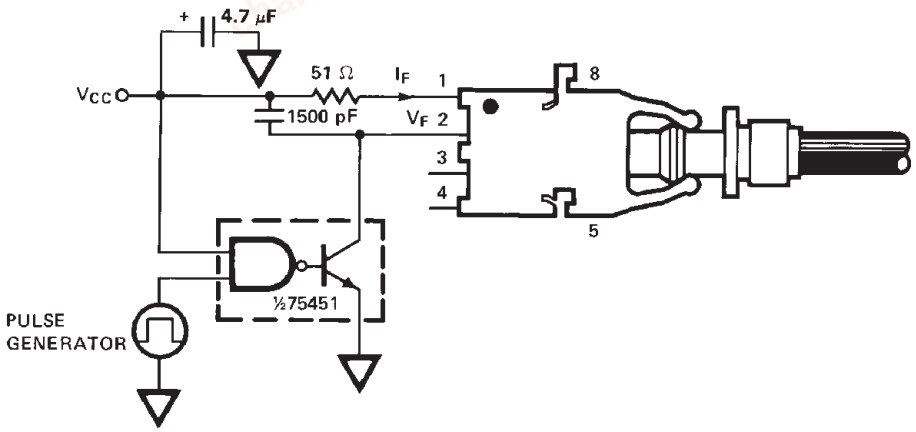

Figure 17: Pulse Width Distortion vs. Optical Power

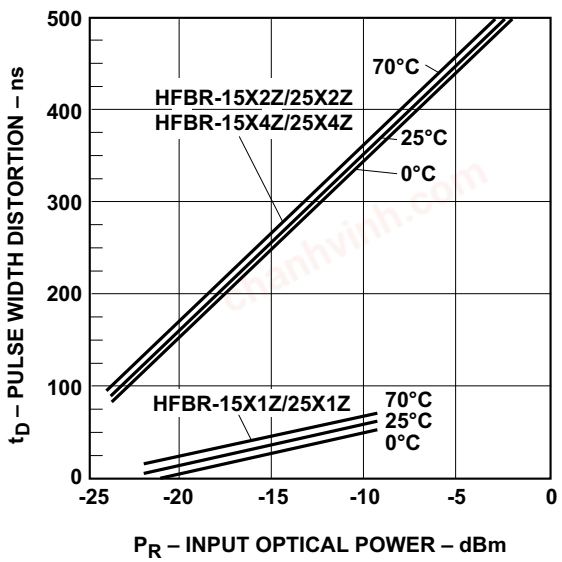

Figure 18: Typical Link Propagation Delay vs. Optical Power

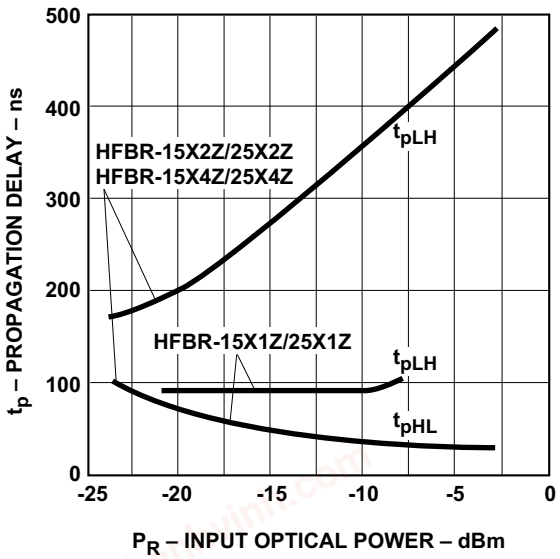

Figure 19: Propagation Delay Test Waveforms

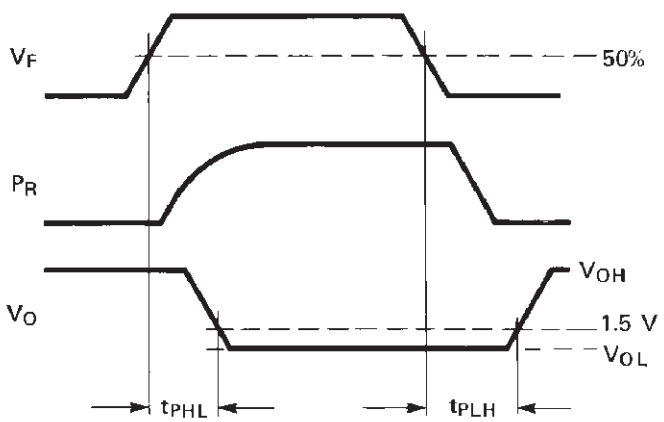

chanhvinh.com

HFBR-15X2Z/15X4Z Transmitters

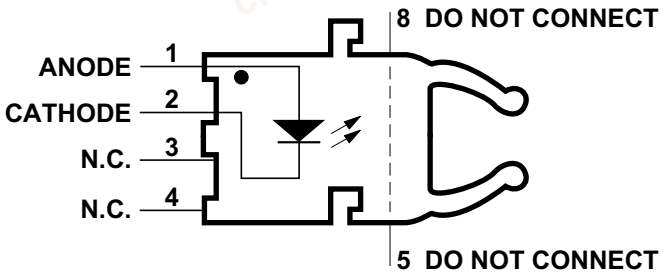

Pin No.	Function
1	Anode
2	Cathode
3	Open
4	Open
5	Do not connect
8	Do not connect

NOTE: Pins 5 and 8 are for mounting and retaining purposes only. Do not electrically connect these pins.

Absolute Maximum Ratings

Parameter		Symbol	Min.	Max.	Units	Reference
Storage Temperature		T_S	–40	+85	°C	—
Operating Temperature		T_A	–40	+85	°C	—
Lead Soldering Cycle	Temperature	—	—	260	°C	Notes a, b
	Time	—	—	10	sec	
Forward Input Current		I_{FPK}	—	1000	mA	Notes c, d
		I_{Fdc}	—	80	—	—
Reverse Input Voltage		V_{BR}	—	5	V	—

a. 1.6 mm the below seating plane. To guard against solder process fluctuations, the recommended nominal soldering time is 5 seconds.

b. The moisture sensitivity level (MSL) is 3.

c. The recommended operating range is between 10 mA and 750 mA.

d. 1-µs pulse, 20-µs period.

NOTE: All HFBR-15XXZ LED transmitters are classified as IEC 825-1 Accessible Emission Limit (AEL) Class 1 based upon the proposed draft that went into effect on January 1, 1997. AEL Class 1 LED devices are considered eye safe. Contact your Broadcom sales representative for more information.

chanhvinh.com

Transmitter Electrical/Optical Characteristics

0°C to 70°C, unless otherwise specified.

For forward voltage and output power vs. drive current graphs.

Parameter		Symbol	Min.	Typ.	Max.	Units	Conditions	Reference
Transmitter Output Optical Power	HFBR-15X2Z	P_T	–13.6 –11.2	—	–4.5 –5.1	dBm	I_{Fdc} = 60 mA I_{Fdc} = 60 mA, 25°C	Notes [a, b]
	HFBR-15X4Z	P_T	–17.8 –15.5	—	–4.5 –5.1	dBm	I_{Fdc} = 60 mA I_{Fdc} = 60 mA, 25°C	
Output Optical Power Temperature Coefficient		$\Delta P_T/\Delta T$	—	–0.85	—	%/°C	—	—
Peak Emission Wavelength		λ_{PK}	—	660	—	nm	—	—
Forward Voltage		V_F	1.45	1.67	2.02	V	I_{Fdc} = 60 mA	—
Forward Voltage Temperature Coefficient		$\Delta V_F/\Delta T$	—	–1.37	—	mV/°C	—	Figure 11
Effective Diameter		D_T	—	1	—	mm	—	—
Numerical Aperture		NA	—	0.5	—	—	—	—
Reverse Input Breakdown Voltage		V_{BR}	5.0	11.0	—	V	I_{Fdc} = 10 µA, T_A = 25°C	—
Diode Capacitance		C_O	—	86	—	pF	V_F = 0V, f = 1 MHz	—
Rise Time		t_r	—	80	—	ns	10% to 90%,	Note [c]
Fall Time		t_f	—	40	—	ns	I_F = 60 mA	

a. Measured at the end of 0.5m standard fiber-optic cable with a large area detector.

b. Optical power, P (dBm) = 10 Log [P(µW)/1000 µW].

c. Rise and fall times are measured with a voltage pulse driving the transmitter and a series connected 50Ω load. A wide-bandwidth optical-to-electrical waveform analyzer, terminated to a 50Ω input of a wide-bandwidth oscilloscope, is used for this response time measurement.

chanhvinh.com

HFBR-25X2Z/25X4Z Receivers

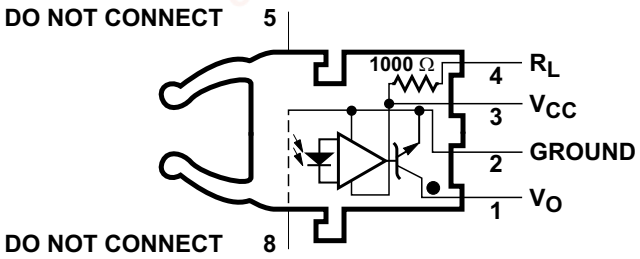

Pin No.	Function
1	V_O
2	Ground
3	V_{CC}
4	R_L
5	Do not connect
8	Do not connect

NOTE: Pins 5 and 8 are for mounting and retaining purposes only. Do not electrically connect these pins.

Absolute Maximum Ratings

Parameter		Symbol	Min.	Max.	Units	Reference
Storage Temperature		T_S	–40	+85	°C	—
Operating Temperature		T_A	–40	+85	°C	—
Lead Soldering Cycle	Temperature	—	—	260	°C	Notes [a, b]
	Time	—	—	10	sec	
Supply Voltage		V_{CC}	–0.5	7	V	Note [c]
Output Collector Current		I_{OAV}	—	25	mA	—
Output Collector Power Dissipation		P_{OD}	—	40	mW	—
Output Voltage		V_O	–0.5	18	V	—
Pull-Up Voltage		V_P	–5	V_{CC}	V	—
Fan-Out (TTL)		N	—	5	—	—

a. 1.6 mm below the seating plane. To guard against solder process fluctuations, the recommended nominal soldering time is 5 seconds.

b. The moisture sensitivity level (MSL) is 3.

c. It is essential that a 0.1-µF bypass capacitor be connected from pin 2 to pin 3 of the receiver. The total lead length between both ends of the capacitor and the pins should not exceed 20 mm.

chanhvinh.com

Receiver Electrical/Optical Characteristics

0°C to 70°C, 4.75V ≤ V_{CC} ≤ 5.25V, unless otherwise specified.

Parameter		Symbol	Min.	Typ.	Max.	Units	Conditions	Reference
Receiver Optical Input Power Level Logic 0	HFBR-2522Z	$P_{R(L)}$	–24	—	—	dBm	V_{OL} = 0V I_{OL} = 8 mA	Notes a, b, c, d, e
	HFBR-2524Z		–20	—	—			
Optical Input Power Level Logic 1		$P_{R(H)}$	—	—	–43	dBm	V_{OH} = 5.25V I_{OH} ≤ 250 µA	
High Level Output Current		I_{OH}	—	5	250	µA	V_O = 18V, P_R = 0	Notes e, f
Low Level Output Voltage		V_{OL}	—	0.4	0.5	V	I_{OL} = 8 mA, P_R = $P_{R(L)MIN}$	Notes e, f
High Level Supply Current		I_{CCH}	—	3.5	6.3	mA	V_{CC} = 5.25V, P_R = 0	Notes e, f
Low Level Supply Current		I_{CCL}	—	6.2	10	mA	V_{CC} = 5.25V, P_R = –12.5 dBm	Notes e, f
Effective Diameter		D	—	1	—	mm	—	—
Numerical Aperture		NA	—	0.5	—	—	—	—
Internal Pull-Up Resistor		R_L	680	1000	1700	Ω	—	—

a. Measured at the end of the fiber-optic cable with a large area detector.

b. Pulsed LED operation at I_F > 80 mA will cause increased link t_{PLH} propagation delay time. This extended t_{PLH} time contributes to increased pulse width distortion of the receiver output signal.

c. The LED drive circuit of Figure 11 is required for 1-Mbaud operation of the HFBR-25X2Z/25X4Z.

d. Optical flux, P (dBm) = 10 Log [P(µW)/1000 µW].

e. Guaranteed only if the optical input signal to the receiver is generated by HFBR-15x2Z/4Z, with ideal alignment to photodiode using 1-mm POF (NA = 0.5).

f. R_L is open.

chanhvinh.com

40-Kbaud Link

System performance under recommended operating conditions, unless otherwise specified.

Parameter	Symbol	Min.	Typ.	Max.	Units	Conditions	Reference
Data Rate	—	dc		40	Kbaud	BER ≤10^{-9}, PRBS: 2^7–1	—
Link Distance (Standard Cable)	d	13 94	41 138	—	m m	I_{Fdc} = 2 mA I_{Fdc} = 60 mA	Figure 21 Note [a]
Link Distance (Improved Cable)	d	15 111	45 154	—	m m	I_{Fdc} = 2 mA I_{Fdc} = 60 mA	Figure 22 Note [a]
Propagation Delay	t_{PLH} t_{PHL}	—	4 25	—	µs µs	R_L = 3.3 kΩ, C_L = 30 pF P_R = –25 dBm, 1m fiber	Figures 22, 25 Note [b]
Pulse Width Distortion t_{PLH}-t_{PHL}	t_D	—	—	7	µs	–39 ≤P_R ≤ –14 dBm R_L = 3.3 kΩ, C_L = 30 pF	Figures 23, 24

a. The estimated typical link life expectancy at 40°C exceeds 10 years at 60 mA.

b. The propagation delay for one meter of cable is typically 5 ns.

Figure 20: Typical 40-Kbaud Interface Circuit

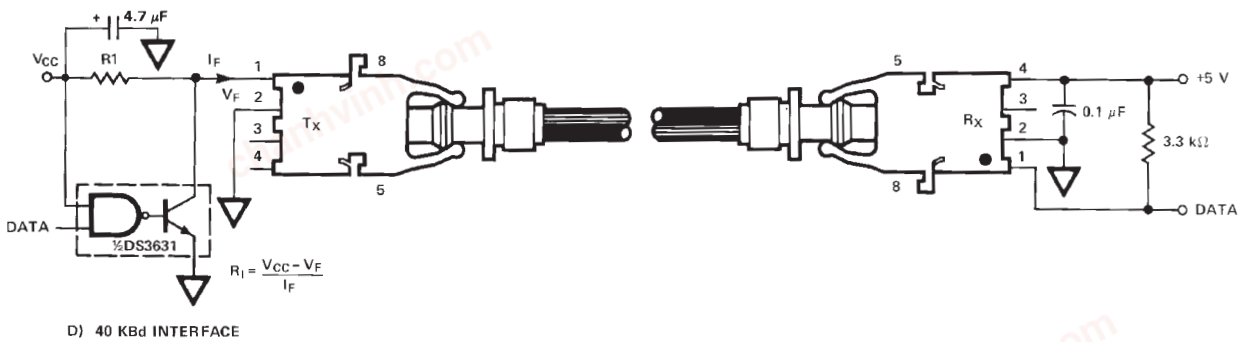

Figure 21: Guaranteed System Performance with Standard Cable

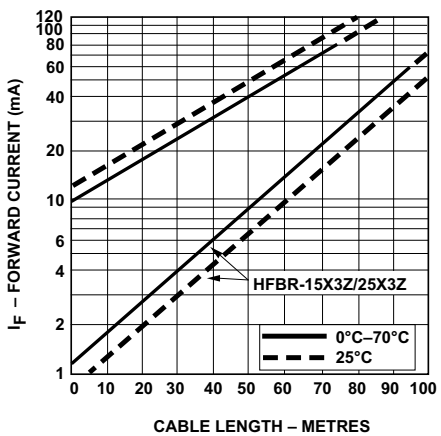

Figure 22: Guaranteed System Performance with Improved Cable

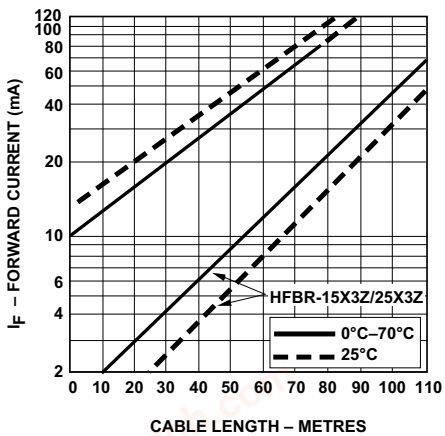

chanhvinh.com

Figure 23: 40-Kbaud Propagation Delay Test Circuit

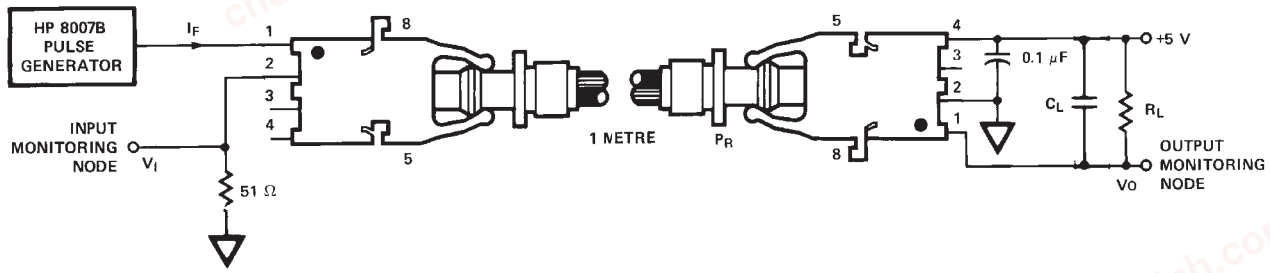

Figure 24: Typical Link Pulse Width Distortion vs. Optical Power

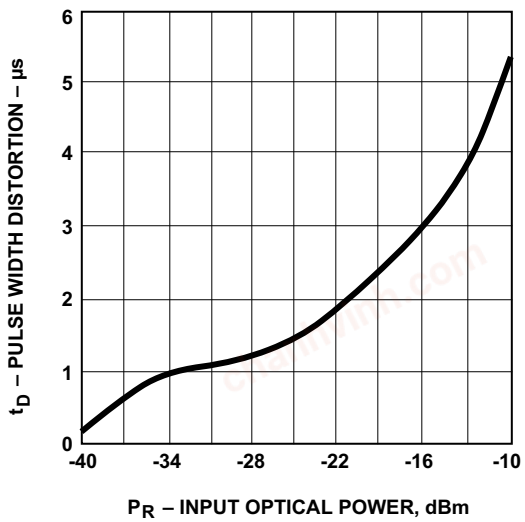

Figure 25: Typical Link Propagation Delay vs. Optical Power

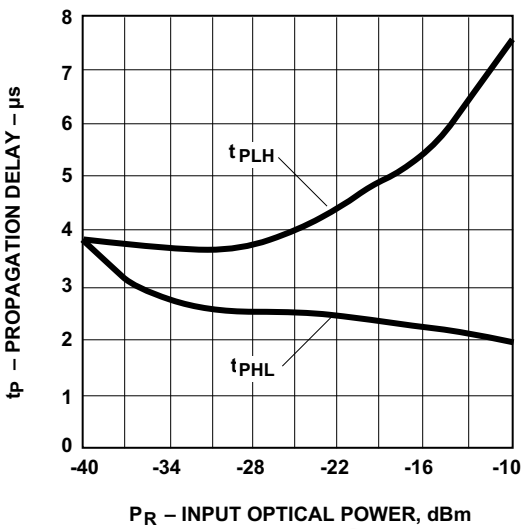

Figure 26: Propagation Delay Test Waveforms

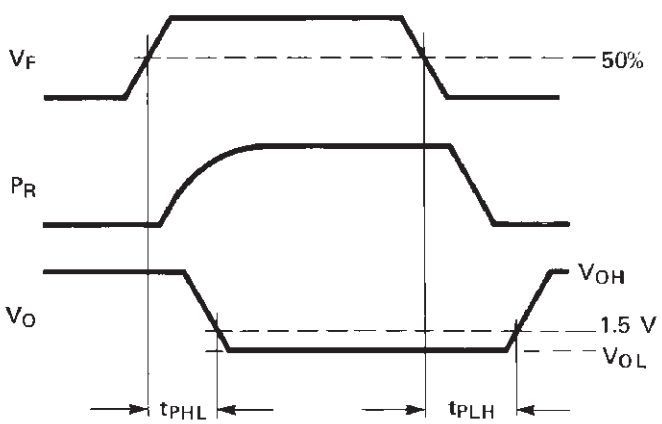

chanhvinh.com

HFBR-15X3Z Transmitter

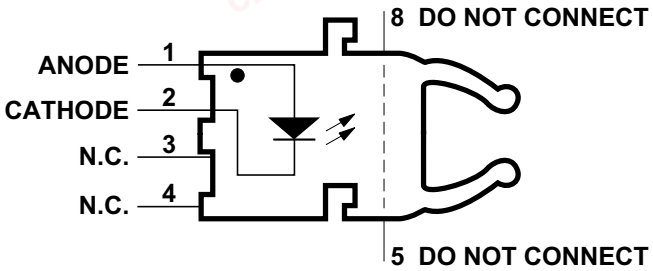

Pin No.	Function
1	Anode
2	Cathode
3	Open
4	Open
5	Do not connect
8	Do not connect

NOTE: Pins 5 and 8 are for mounting and retaining purposes only. Do not electrically connect these pins.

Absolute Maximum Ratings

Parameter		Symbol	Min.	Max.	Units	Reference
Storage Temperature		T_S	–40	+85	°C	—
Operating Temperature		T_A	–40	+85	°C	—
Lead Soldering Cycle	Temperature	—	—	260	°C	Notes [a, b]
	Time	—	—	10	sec	
Forward Input Current		I_{FPK}	—	1000	mA	Notes [c, d]
		I_{Fdc}	—	80	—	—
Reverse Input Voltage		V_{BR}	—	5	V	—

a. 1.6 mm below the seating plane. To guard against solder process fluctuations, the recommended nominal soldering time is 5 seconds.

b. The moisture sensitivity level (MSL) is 3.

c. The recommended operating range is between 10 mA and 750 mA.

d. 1-µs pulse, 20-µs period.

NOTE: All HFBR-15XXZ LED transmitters are classified as IEC 825-1 Accessible Emission Limit (AEL) Class 1 based upon the proposed draft that went into effect on January 1, 1997. AEL Class 1 LED devices are considered eye safe. Contact your Broadcom sales representative for more information.

chanhvinh.com

Transmitter Electrical/Optical Characteristics

0°C to 70°C, unless otherwise specified.

For forward voltage and output power vs. drive current graphs.

Parameter	Symbol	Min.	Typ.	Max.	Units	Conditions	Reference
Transmitter Output Optical Power	P_T	–11.2 –13.6 –35.5		–5.1 –4.5	dBm	I_{Fdc} = 60 mA, 25°C I_{Fdc} = 60 mA I_{Fdc} = 2 mA, 0–70°C	Notes [a, b] Figures 9, 10
Output Optical Power Temperature Coefficient	$\Delta P_T/\Delta T$	—	–0.85	—	%/°C	—	—
Peak Emission Wavelength	λ_{PK}	—	660	—	nm	—	—
Forward Voltage	V_F	1.45	1.67	2.02	V	I_{Fdc} = 60 mA	—
Forward Voltage Temperature Coefficient	$\Delta V_F/\Delta T$	—	–1.37	—	mV/°C	—	Figure 18
Effective Diameter	D	—	1	—	mm	—	—
Numerical Aperture	NA	—	0.5	—	—	—	—
Reverse Input Breakdown Voltage	V_{BR}	5.0	11.0	—	V	I_{Fdc} = 10 µA, T_A = 25°C	—
Diode Capacitance	C_O	—	86	—	pF	V_F = 0V, f = 1 MHz	—
Rise Time	t_r	—	80	—	ns	10% to 90%, I_F = 60 mA	Note [c]
Fall Time	t_f	—	40	—			

a. Measured at the end of 0.5m standard fiber-optic cable with a large area detector.

b. Optical power, P (dBm) = 10 Log [P(µW)/1000 µW].

c. Rise and fall times are measured with a voltage pulse driving the transmitter and a series connected 50Ω load. A wide bandwidth optical to electrical waveform analyzer, terminated to a 50Ω input of a wide bandwidth oscilloscope, is used for this response time measurement.

chanhvinh.com

HFBR-25X3Z Receiver

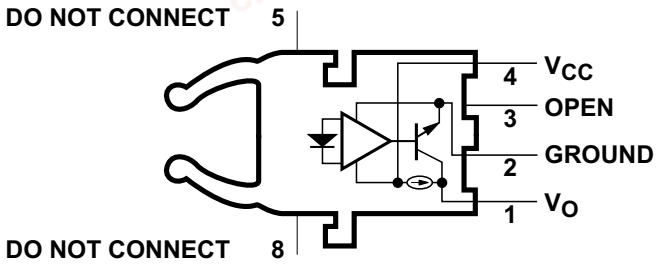

Pin No.	Function
1	V_O
2	Ground
3	Open
4	V_{CC}
5	Do not connect
8	Do not connect

NOTE: Pins 5 and 8 are for mounting and retaining purposes only. Do not electrically connect these pins.

Absolute Maximum Ratings

Parameter		Symbol	Min.	Max.	Units	Reference
Storage Temperature		T_S	–40	+85	°C	—
Operating Temperature		T_A	–40	+85	°C	—
Lead Soldering Cycle	Temperature	—	—	260	°C	Notes [a], [b]
	Time	—	—	10	sec	
Supply Voltage		V_{CC}	–0.5	7	V	Note [c]
Average Output Collector Current		I_O	–1	5	mA	—
Output Collector Power Dissipation		P_{OD}	—	25	mW	—
Output Voltage		V_O	–0.5	7	V	—

a. 1.6 mm below seating plane. To guard against solder process fluctuations, the recommended nominal soldering time is 5 seconds.

b. Moisture sensitivity level (MSL) is 3.

c. It is essential that a bypass capacitor 0.1 µF be connected from pin 2 to pin 4 of the receiver.

chanhvinh.com

Receiver Electrical/Optical Characteristics

0°C to 70°C, 4.5V ≤V_{CC} ≤ 5.5V, unless otherwise specified.

Parameter	Symbol	Min.	Typ.	Max.	Units	Conditions	Reference
Input Optical Power Level Logic 0	$P_{R(L)}$	–39	—	–13.7	dBm	$V_O = V_{OL}$, I_{OL} = 3.2 mA	Notes a, b, c
		–39	—	–13.3		$V_O = V_{OL}$, I_{OH} = 8 mA, 25°C	
Input Optical Power Level Logic 1	$P_{R(H)}$	—	—	–53	dBm	V_{OH} = 5.5V I_{OH} ≤ 40 µA	Note c
High Level Output Voltage	V_{OH}	2.4	—	—	V	I_O = –40 µA, P_R = 0 µW	—
Low Level Output Voltage	V_{OL}	—	—	0.4	V	I_{OL} = 3.2 mA, $P_R = P_{R(L)MIN}$	Note d
High Level Supply Current	I_{CCH}	—	1.2	1.9	mA	V_{CC} = 5.5V, P_R = 0 µW	—
Low Level Supply Current	I_{CCL}	—	2.9	3.7	mA	V_{CC} = 5.5V, $P_R = P_{RL(MIN)}$	Note d
Effective Diameter	D	—	1	—	mm	—	—
Numerical Aperture	NA	—	0.5	—	—	—	—

a. Measured at the end of the fiber-optic cable with a large area detector.

b. Optical flux, P (dBm) = 10 Log [P(µW)/1000 µW].

c. Because of the very high sensitivity of the HFBR-25X3Z, the digital output may switch in response to ambient light levels when a cable is not occupying the receiver optical port. The designer should take care to filter out signals from this source if they pose a hazard to the system.

d. Including current in 3.3 kΩ pull-up resistor.

Copyright © 2005–2023 Broadcom. All Rights Reserved. The term “Broadcom” refers to Broadcom Inc. and/or its subsidiaries. For more information, go to www.broadcom.com. All trademarks, trade names, service marks, and logos referenced herein belong to their respective companies.

Broadcom reserves the right to make changes without further notice to any products or data herein to improve reliability, function, or design. Information furnished by Broadcom is believed to be accurate and reliable. However, Broadcom does not assume any liability arising out of the application or use of this information, nor the application or use of any product or circuit described herein, neither does it convey any license under its patent rights nor the rights of others.

BROADCOM®