chanhvinh.com

HEDS-9000/9100

Two Channel Optical Incremental Encoder Modules

Data Sheet



Description

The HEDS-9000 and the HEDS-9100 series are high performance, low cost, optical incremental encoder modules. When used with a codewheel, these modules detect rotary position. The modules consist of a lensed (LED) source and a detector IC enclosed in a small C-shaped plastic package. Due to a highly collimated light source and unique photodetector array, these modules are extremely tolerant to mounting misalignment.

The two channel digital outputs and the single 5 V supply input are accessed through five 0.025 inch square pins located on 0.1 inch centers.

Standard resolutions for the HEDS-9000 are 500 CPR and 1000 CPR for use with a HEDS-6100 codewheel or equivalent.

For the HEDS-9100, standard resolutions between 96 CPR and 512 CPR are available for use with a HEDS-5120 codewheel or equivalent.

Features

- High performance
- High resolution
- Low cost
- Easy to mount
- No signal adjustment required
- Small size
- -40°C to 100 °C operating temperature
- Two channel quadrature output
- TTL compatible
- Single 5 V supply

Applications

The HEDS-9000 and 9100 provide sophisticated motion detection at a low cost, making them ideal for high volume applications. Typical applications include printers, plotters, tape drives, and factory automation equipment.

Note: Avago Technologies encoders are not recommended for use in safety critical applications. Eg. ABS braking systems, power steering, life support systems and critical care medical equipment. Please contact sales representative if more clarification is needed.

ESD WARNING: NORMAL HANDLING PRECAUTIONS SHOULD BE TAKEN TO AVOID STATIC DISCHARGE.

chanhvinh.com

Theory of Operation

The HEDS-9000 and 9100 are C-shaped emitter/detector modules. Coupled with a codewheel, they translate the rotary motion of a shaft into a two-channel digital output.

As seen in the block diagram, each module contains a single Light Emitting Diode (LED) as its light source. The light is collimated into a parallel beam by means of a single polycarbonate lens located directly over the LED. Opposite the emitter is the integrated detector circuit. This IC consists of multiple sets of photodetectors and the signal processing circuitry necessary to product the digital waveforms.

The codewheel rotates between the emitter and detector, causing the light beam to be interrupted by the pattern of spaces and bars on the codewheel. The photodiodes which detect these interruptions are arranged in a pattern that corresponds to the radius and design of the odewheel. These detectors are also spaced such that a light period on one pair of detectors corresponds to a dark period on the adjacent pair of detectors. The photodiode outputs are then fed through the signal processing circuitry resulting in A, $\overline{A}$, B, and $\overline{B}$. Two comparators receive these signals and produce the final outputs for channels $\overline{A}$ and $\overline{B}$. Due to this integrated phasing technique, the digital output of channel A is in quadrature with that of channel B (90 degrees out of phase).

Package Dimensions

HEDS-9x00

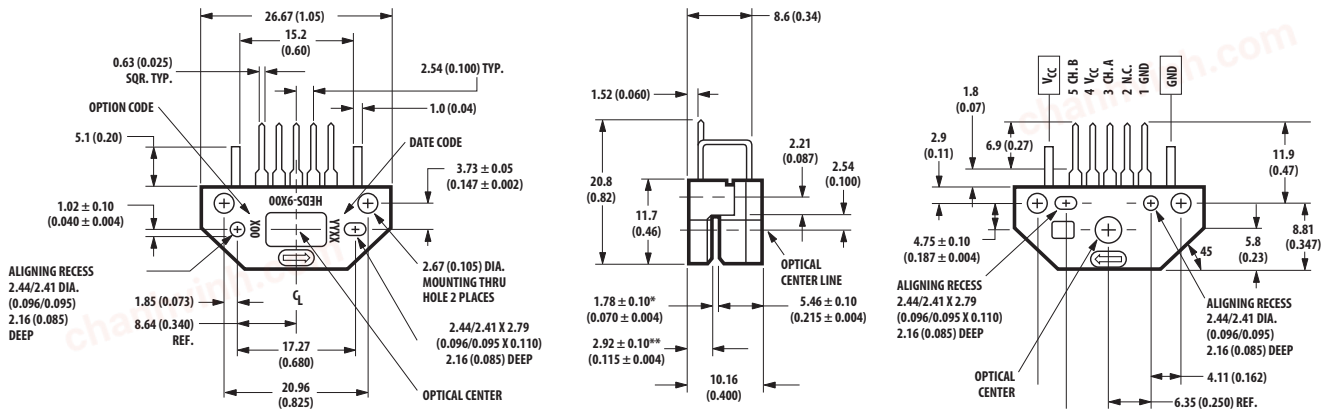

TYPICAL DIMENSIONS IN MILLIMETERS AND (INCHES)
* GAP MEASUREMENT TO THE SURFACE WINDOW = 1.68 ± 0.10 (0.066 ± 0.004)
** HEIGHT TO THE WINDOW = 3.02 ± 0.10 (0.119 ± 0.004)

HEDS-9x01

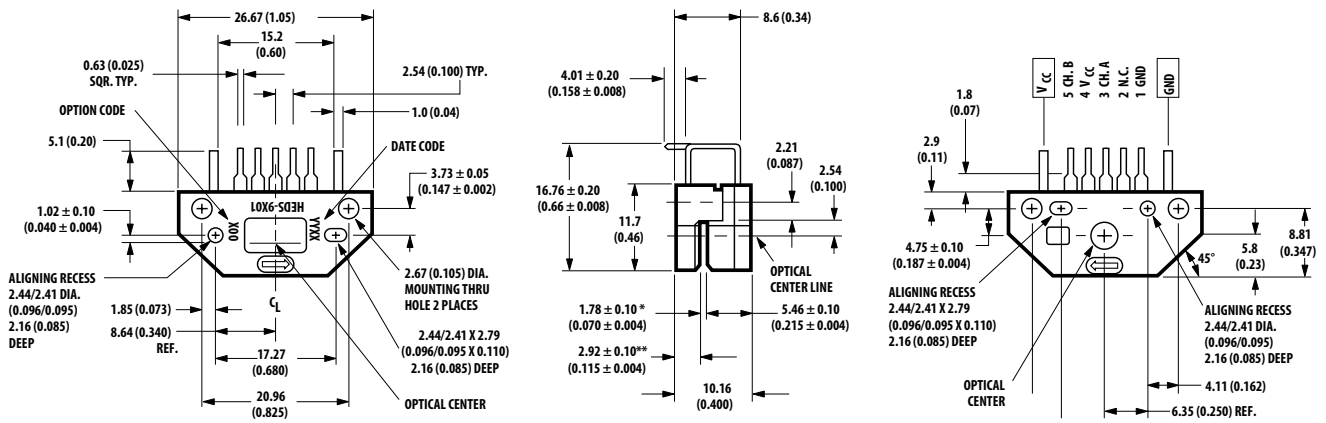

TYPICAL DIMENSIONS IN MILLIMETERS AND (INCHES)
* GAP MEASUREMENT TO THE SURFACE WINDOW = 1.68 ± 0.10 (0.066 ± 0.004)
** HEIGHT TO THE WINDOW = 3.02 ± 0.10 (0.119 ± 0.004)

chanhvinh.com

Block Diagram

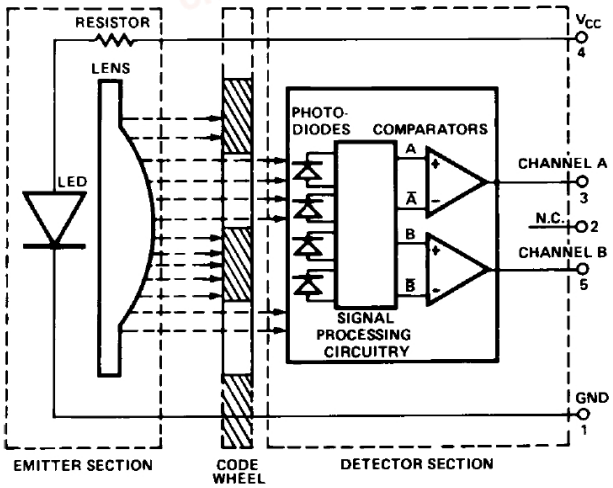

Output Waveforms

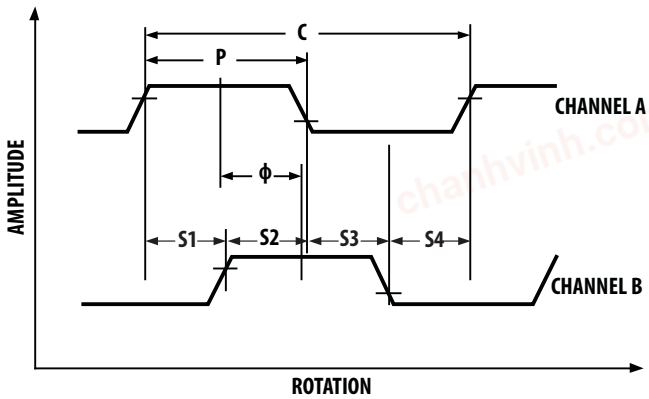

Definitions

Count (N): The number of bar and window pairs or counts per revolution (CPR) of the codewheel.

1 Shaft Rotation = 360 mechanical degrees,
= N cycles.

1 cycle (C) = 360 electrical degrees (°e),
= 1 bar and window pair.

Pulse Width (P): The number of electrical degrees that an output is high during 1 cycle. This value is nominally 180°e or 1/2 cycle.

Pulse Width Error (ΔP): The deviation, in electrical degrees of the pulse width from its ideal value of 180°e.

State Width (S): The number of electrical degrees between a transition in the output of channel A and the neighboring transition in the output of channel B. There are 4 states per cycle, each nominally 90°e.

State Width Error (ΔS): The deviation, in electrical degrees, of each state width from its ideal value of 90°e.

Phase (ϕ): The number of electrical degrees between the center of the high state of channel A and the center of the high state of channel B. This value is nominally 90°e for quadrature output.

Phase Error (Δϕ): The deviation of the phase from its ideal value of 90°e.

Direction of Rotation: When the codewheel rotates in the direction of the arrow on top of the module, channel A will lead channel B. If the codewheel rotates in the opposite direction, channel B will lead channel A.

Optical Radius (R_{op}): The distance from the codewheel's center of rotation to the optical center (O.C.) of the encoder module.

chanhvinh.com

Absolute Maximum Ratings

Storage Temperature, T_S	-40°C to 100°C
Operating Temperature, T_A	-40°C to 100°C
Supply Voltage, V_{CC}	-0.5 V to 7 V
Output Voltage, V_O	-0.5 V to V_{CC}
Output Current per Channel, I_{out}	-1.0 mA to 5 mA

Recommended Operating Conditions

Parameter	Symbol	Min.	Typ.	Max.	Units	Notes
Temperature	T	-40		100	°C	
Supply Voltage	V_{CC}	4.5		5.5	Volts	Ripple < 100 mV_{p-p}
Load Capacitance	C_L			100	pF	3.3 kΩ pull-up resistor
Count Frequency	f			100	kHz	$\frac{\text{Velocity (rpm) x N}}{60}$

Note: The module performance is guaranteed to 100 kHz but can operate at higher frequencies.

Encoding Characteristics

Encoding Characteristics over Recommended Operating Range and Recommended Mounting Tolerances. These Characteristics do not include codewheel/codestrip contribution.

Description	Sym.	Typ.	Case 1 Max.	Case 2 Max.	Units	Notes
Pulse Width Error	ΔP	30	40		°e	
Logic State Width Error	ΔS	30	40		°e	
Phase Error	Δϕ	2	10	105	°e	

Case 1: Module mounted on tolerance circle of ±0.13 mm (±0.005 in.).
Case 2: HEDS-9000 mounted on tolerances of ±0.50 mm (0.020").
HEDS-9100 mounted ontolerances of ±0.38 mm (0.015").

Electrical Characteristics

Electrical Characteristics over Recommended Operating Range, typical at 25°C.

Parameter	Symbol	Min.	Typical	Max.	Units	Notes
Supply Current	I_{CC}		17	40	mA	
High Level Output Voltage	V_{OH}	2.4			Volts	I_{OH} = -40 µA max.
Low Level Output Voltage	V_{OL}			0.4	Volts	I_{OL} = 3.2 mA
Rise Time	t_r		200		ns	C_L = 25 pF
Fall Time	t_f		50		ns	R_L = 11 kΩ pull-up

chanhvinh.com

Derating Curves over Extended Operating Frequencies (HEDS-9000/9100)

Below are the derating curves for state, duty, phase and V_{OH} over extended operating frequencies of up to 240 kHz (recommended maximum frequency is 100 kHz). The curves were derived using standard TTL load. –40°C operation is not feasible above 160 kHz because V_{OH} will drop below 2.4 V (the minmum TTL for logic state high) beyond that frequency.

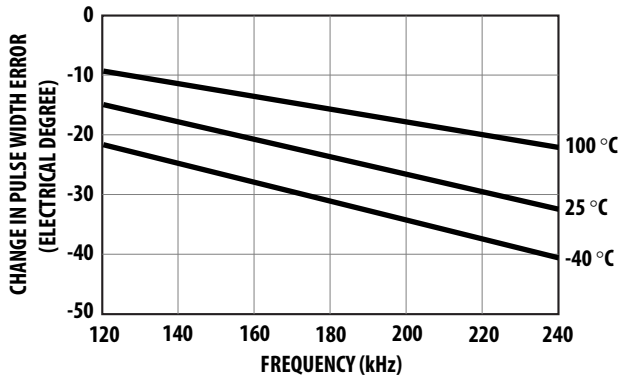

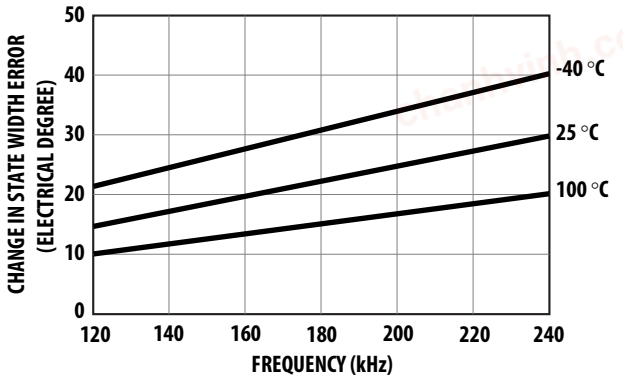

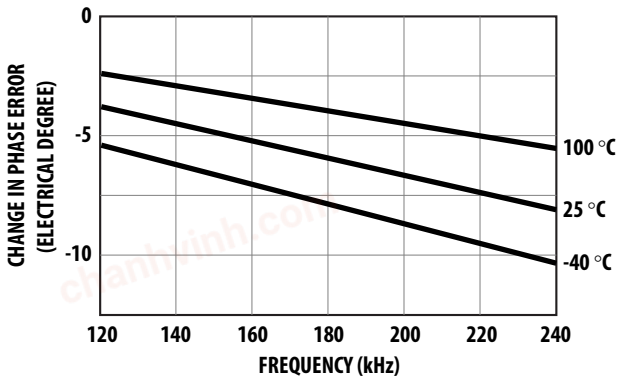

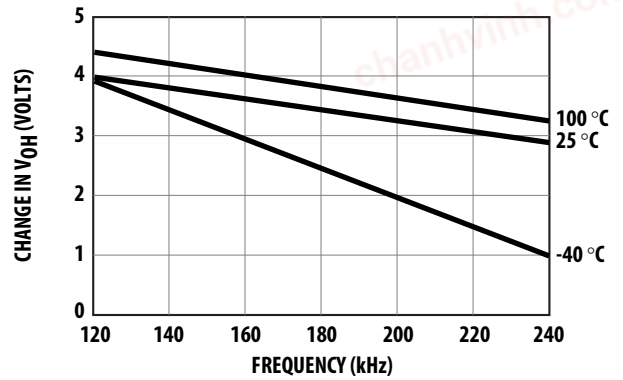

chanhvinh.com

Recommended Codewheel Characteristics

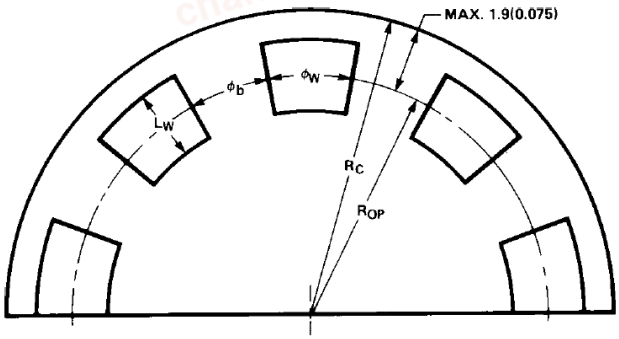

Figure 1. Codestrip Design

Codewheel Options

HEDS Series	CPR (N)	Option	Optical Radius mm (in.)
5120	96	K	11.00 (0.433)
5120	100	C	11.00 (0.433)
5120	192	D	11.00 (0.433)
5120	200	E	11.00 (0.433)
5120	256	F	11.00 (0.433)
5120	360	G	11.00 (0.433)
5120	400	H	11.00 (0.433)
5120	500	A	11.00 (0.433)
5120	512	I	11.00 (0.433)
6100	500	A	23.36 (0.920)
6100	1000	B	23.36 (0.920)

Parameter	Symbol	Minimum	Maximum	Units	Notes
Window/Bar Ratio	ϕ_w/ϕ_b	0.7	1.4		
Window Length	L_W	1.8 (0.071)	2.3 (0.09)	mm (inch)	
Absolute Maximum Codewheel Radius	R_C		R_{OP} + 1.9 (0.0075)	mm (inch)	Includes eccentricity errors

chanhvinh.com

Mounting Considerations

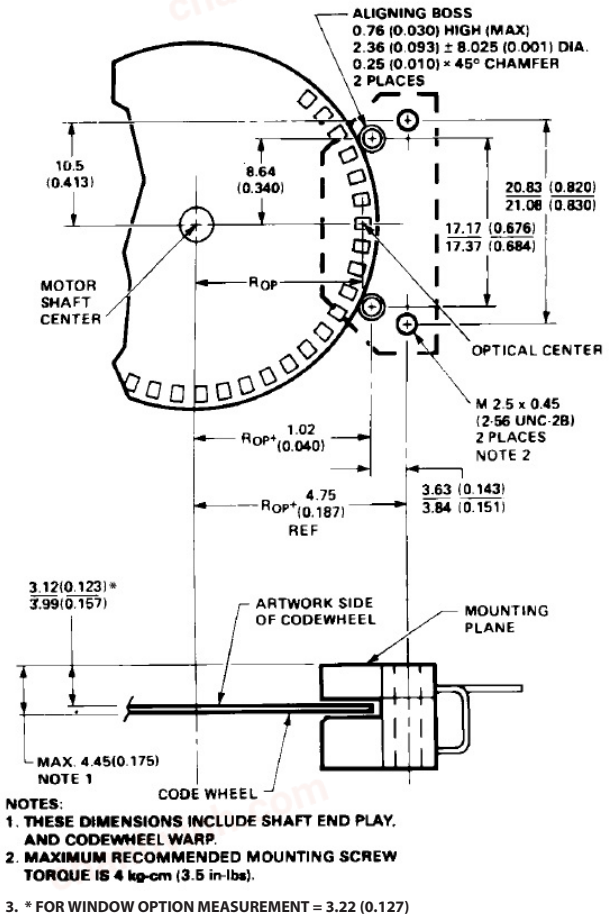

Figure 2. Mounting Plane Side A.

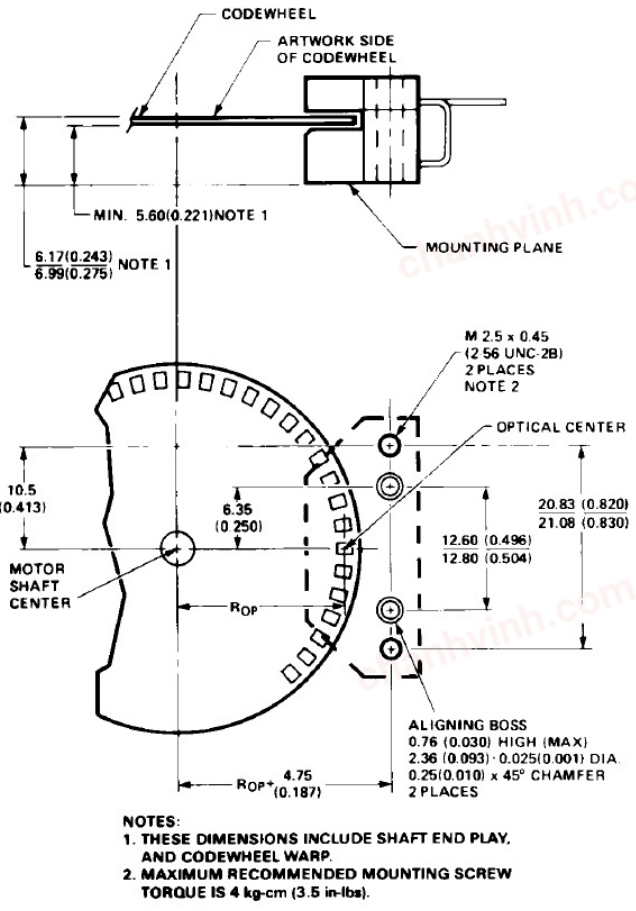

Figure 3. Mounting Plane Side B.

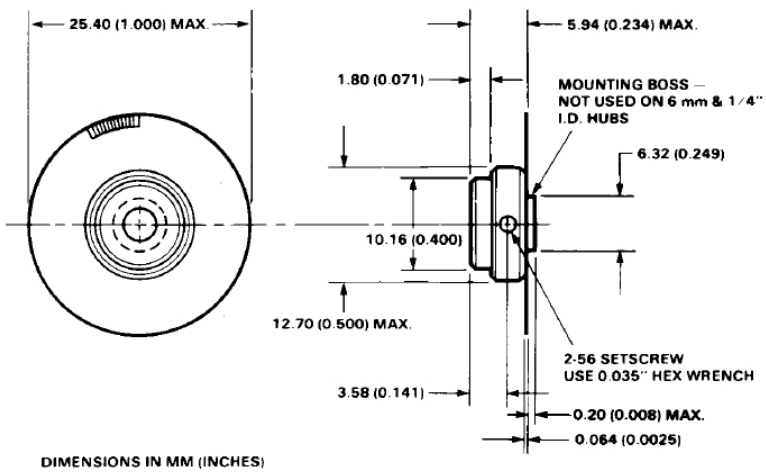

Figure 4. Mounting as Referenced to Side A.

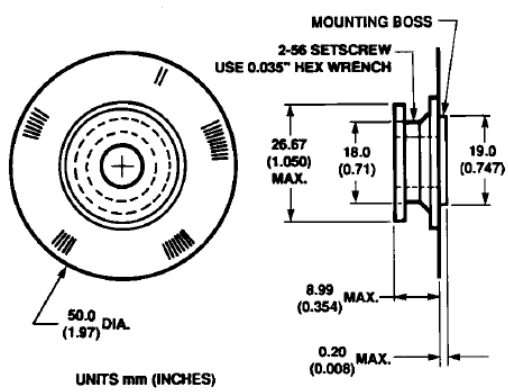

Figure 5. Mounting as Referenced to Side B.

chanhvinh.com

Connectors

Mounting Manufacturer	Part Number	Surface
AMP	1203686-4 640442-5	Both Side B
DuPont	65039-032 with 4825X-000 term.	Both
HP	HEDS-8902 with 4-wire leads	Side B (see Fig. 6)
Molex	2695 series with 2759 series term.	Side B

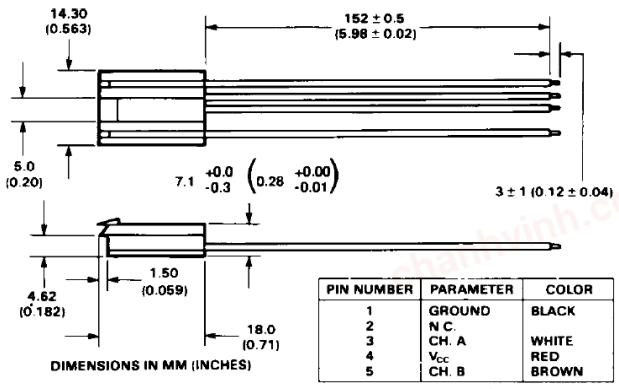

Figure 6. HEDS-8902 Connector.

Ordering Information

HEDS-9000 Option ☐ 0 0 HEDS-6100 Option ☐ ☐ ☐

Resolution (Cycles/Rev)

A - 500 CPR
B - 1000 CPR
J - 1024 CPR
T - 2000 CPR*
U - 2048 CPR*

Shaft Diameter

06 - 1/4 in.
08 - 3/8 in.
09 - 1/2 in.
10 - 5/8 in.
12 - 6 mm
13 - 8 mm

	A	B	C	D	E	F	G	H	I	J	K	L	S	T	U
HEDS-9000	*	*								*				*	*

	01	02	03	04	05	06	08	09	10	11	12	13	14
HEDS-6100	A								*			*	*
	B						*	*	*	*			

chanhvinh.com

HEDS-910 0 Option

Lead
0 - Straight Leads
1 - Bent Leads

HEDS-5120 Option

Resolution (Cycles/Rev)	
S - 50 CPR	H - 400 CPR
K - 96 CPR	A - 500 CPR
C - 100 CPR	I - 512 CPR
E - 200 CPR	B - 1000 CPR*
F - 256 CPR	J - 1024 CPR*
G - 360 CPR	

Shaft Diameter	
01 - 2 mm	11 - 4 mm
02 - 3 mm	14 - 5 mm
03 - 1/8 in.	12 - 6 mm
04 - 5/32 in.	13 - 8 mm
05 - 3/16 in.	
06 - 1/4 in.	

	A	B	C	D	E	F	G	H	I	J	K	S	T	U
HEDS-9100	*	*	*		*	*	*	*	*	*	*	*		
HEDS-9101	*		*		*		*							

		01	02	03	04	05	06	08	09	10	11	12	13	14
HEDS-5120	A	*	*	*	*	*	*				*	*		*
	C		*				*				*	*	*	*
	D					*								
	E						*					*		
	F					*								
	G		*	*		*	*				*			*
	H		*				*				*	*		*
	I		*		*		*				*	*	*	
	K		*										*	

Avago, Avago Technologies, and the A logo are trademarks of Avago Technologies in the United States and other countries.
Data subject to change. Copyright © 2005-2014 Avago Technologies. All rights reserved. Obsoletes 5988-6712EN
AV02-1867EN - March 17, 2014