chanhvinh.com

HDSP-740x Series

7.6 mm (0.3 inch) Micro Bright Seven Segment Displays

Data Sheet

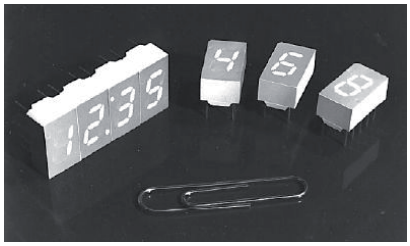

HDSP-740x Series, HDSP-750x Series, HDSP-780x Series, HDSP-A15x Series, HDSP-A40x Series

Description

The 7.6 mm (0.3 inch) LED seven segment displays are designed for viewing distances up to 3 metres (10 feet). These devices use an industry standard size package and pinout. Both the numeric and ±1. overflow devices feature a right hand decimal point. All devices are available as either common anode or common cathode.

These displays are ideal for most applications. Pin for pin equivalent displays are also available in a low current design. The low current displays are ideal for portable applications. For additional information see the Low Current Seven Segment Displays.

Features

- Available with colon for clock display
- Compact package
  - 0.300 x 0.500 inches
  - Leads on 2.54 mm (0.1 inch) centers
- Choice of colors
  - AlGaAs Red, High Efficiency Red, Yellow, Green, Orange
- Excellent appearance
  - Evenly lighted segments
  - Mitered corners on segments
  - Surface color gives optimum contrast
  - ±50° viewing angle
- Design flexibility
  - Common anode or common cathode
  - Right hand decimal point
  - ±1. Overflow Character
- Categorized for luminous intensity
  - Yellow and Green categorized for color
  - Use of like categories yields a uniform display
- High light output
- High peak current
- Excellent for long digit string multiplexing
- Intensity and color selection available
  - See Intensity and Color Selected Displays Data Sheet
- Sunlight viewable AlGaAs

Devices

Orange HDSP-	AlGaAs [1] HDSP-	HER [1] HDSP-	Yellow [1] HDSP-	Green [1] HDSP-	Description	Package Drawing
A401	A151	7501	7401	7801	Common Anode Right Hand Decimal	A
		7502		7802	Common Anode Right Hand Decimal, Colon	B
A403	A153	7503	7403	7803	Common Cathode Right Hand Decimal	C
		7504		7804	Common Cathode Right Hand Decimal, Colon	D
		7507		7807	CommonAnode ±1. Overfolw	E
		7508		7808	Common Cathode ±1. Overfolw	F

Note:
1. These displays are recommended for high ambient light operation. Please refer to the HDSP-A10X AlGaAs, HDSP-335X HER, HDSP-A80X Yellow, and HDSP-A90X Green data sheet for low current operation.

chanhvinh.com

Part Numbering System

5082 – X XX X – X X X XX
HDSP – X XX X – X X X XX

Mechanical Option [1]
00: No Mechanical Option

Color Bin Options [1, 2]
0: No Color Bin Limitation
3: Color Bins 3- and 3+ only (applicable for Yellow devices only)
Z: Color Bins 2- and 3+ only (applicable for Yellow devices only)

Maximum Intensity Bin [1, 2]
0: No Maximum Intensity Bin Limitation

Minimum Intensity Bin [1, 2]
0: No Minimum Intensity Bin Limitation

Device Configuration/Color [1]
1: Common Anode
2: Common Anode
3: Common Cathode
4: Common Cathode

Device Specific Configuration [1]
Refer to Respective Datasheet

Package [1]
A: 7.6 mm (0.3 inch) Single Digit Seven Segment Display

Notes:
1. For codes not listed in the figure above, please refer to the respective datasheet or contact your nearest Avago representative for details.
2. Bin options refer to shippable bins for a part number. Color and Intensity Bins are typically restricted to 1 bin per tube (exceptions may apply). Please refer to respective datasheet for specific bin limit information.

chanhvinh.com

Package Dimensions

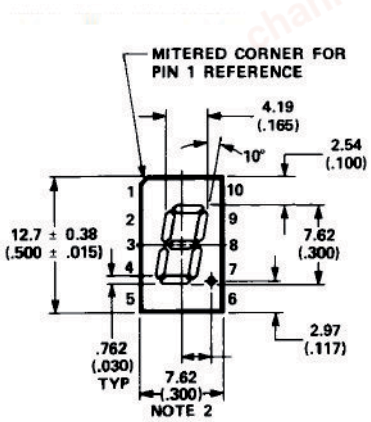

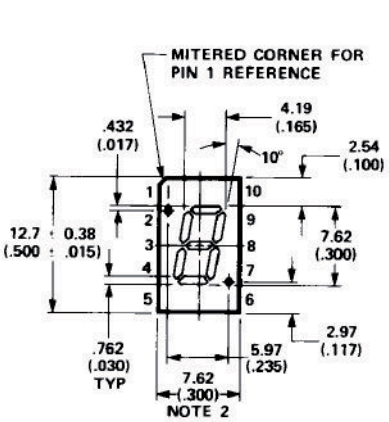

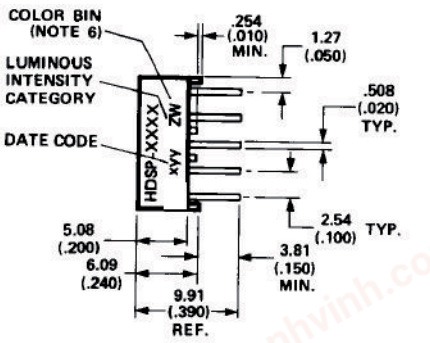

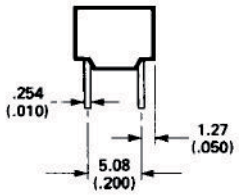

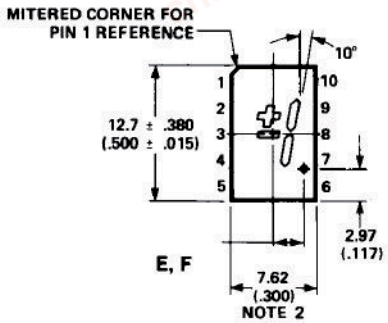

Notes:
1. All dimensions in millimetres (inches).
2. Maximum.
3. All untoleranced dimensions are for reference only.
4. Redundant anodes.
5. Redundant cathodes.
6. For hdsp-7400/-7800 series product only.

	FUNCTION					
Pin	A	B	C	D	E	F
1	ANODE[4]	CATHODE COLON	CATHODE[5]	ANODE COLON	ANODE[4]	CATHODE[6]
2	CATHODE f	CATHODE f	ANODE f	ANODE f	CATHODE PLUS	ANODE PLUS
3	CATHODE g	CATHODE g	ANODE g	ANODE g	CATHODE MINUS	ANODE MINUS
4	CATHODE e	CATHODE e	ANODE e	ANODE e	NC	NC
5	CATHODE d	CATHODE d	ANODE d	ANODE d	NC	NC
6	ANODE[4]	ANODE	CATHODE[5]	CATHODE	ANODE[4]	CATHODE[5]
7	CATHODE DP	CATHODE DP	CATHODE DP	ANODE DP	CATHODE DP	ANODE DP
8	CATHODE c	CATHODE c	CATHODE c	ANODE c	CATHODE c	ANODE c
9	CATHODE b	CATHODE b	CATHODE b	ANODE b	CATHODE b	ANODE b
10	CATHODE a	CATHODE a	CATHODE a	ANODE a	NC	NC

Internal Circuit Diagram

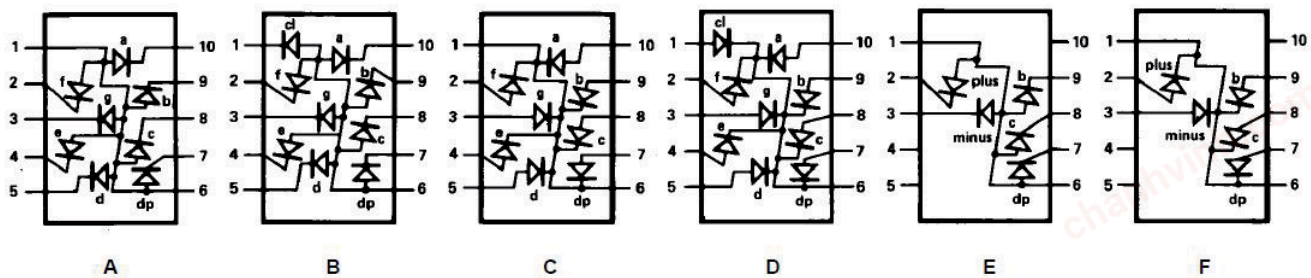

chanhvinh.com

Absolute Maximum Ratings

Description	AlGaAs Red HDSP-A150 Series	HER/Orange HDSP-7500/ -A40X Series	Yellow HDSP-7400 Series	Green HDSP-7800 Series	Units
Average Power per Segment or DP	96	105	80	105	mW
Peak Forward Current per Segment or DP	160[1]	90[3]	60[5]	90[7]	mA
DC Forward Current per Segment or DP	40[2]	30[4]	20[6]	30[8]	mA
Operating Temperature Range	–20 to +100[9]		–40 to +100		°C
Storage Temperature Range			–55 to +100		°C
Reverse Voltage per segment or DP			3.0		V
Wave Soldering Temperature for 3 Seconds (1.59mm [0.063 in.] below Body)			250		°C

Notes:
1. See Figure 1 to establish pulsed conditions.
2. Derate above 46°C at 0.54 mA/°C.
3. See Figure 6 to establish pulsed conditions.
4. Derate above 53°C at 0.45 mA/°C.
5. See Figure 7 to establish pulsed conditions.
6. Derate above 81°C at 0.52 mA/°C.
7. See Figure 8 to establish pulsed conditions.
8. Derate above 39°C at 0.37 mA/°C.
9. For operation below –20°C, contact your local Avago components sales office or an authorized distributor.

Electrical/Optical Characteristics at $T_A = 25°C$

AlGaAs Red

Device Series HDSP-	Parameter	Symbol	Min.	Typ.	Max.	Units	Test Conditions
A15x	Luminous Intensity/Segment[1,2,5] (Digit Average)	I_V	6.9	14.0		mcd	I_F = 20 mA
	Forward Voltage/Segment or DP	V_F		1.8		V	I_F = 20 mA
				2.0	3.0	V	I_F = 100 mA
	Peak Wavelength	λ_{PEAK}		645		nm	
	Dominant Wavelength[3]	λ_d		637		nm	
	Reverse Voltage/Segment or DP[4]	V_R	3.0	15.0		V	I_R = 100 µA
	Temperature Coefficient of V_F/ Segment or DP	ΔV_F/°C		-2		mV/°C	
	Thermal Resistance LED Junction-to-Pin	$R\theta_{J\text{-}PIN}$		255		°C/W/Seg	

chanhvinh.com

High Efficiency Red

Device Series HDSP-	Parameter	Symbol	Min.	Typ.	Max.	Units	Test Conditions
750x	Luminous Intensity/Segment[1,2,6] (Digit Average)	I_V	360	980		µcd	I_F = 5 mA
				5390			I_F = 20 mA
	Forward Voltage/Segment or DP	V_F		2.0	2.5	V	I_F = 20 mA
	Peak Wavelength	λ_{PEAK}		635		nm	
	Dominant Wavelength[3]	λ_d		626		nm	
	Reverse Voltage/Segment or DP[4]	V_R	3.0	30		V	I_R = 100 µA
	Temperature Coefficient of V_F/ Segment or DP	ΔV_F/°C		-2		mV/°C	
	Thermal Resistance LED Junction-to-Pin	$R\theta_{J\text{-}PIN}$		200		°C/W/Seg	

Orange

Device Series HDSP-	Parameter	Symbol	Min.	Typ.	Max.	Units	Test Conditions
A40x	Luminous Intensity/Segment[1,2,6] (Digit Average)	I_V		0.70		mcd	I_F = 5 mA
	Forward Voltage/Segment or DP	V_F		2.0	2.5	V	I_F = 20 mA
	Peak Wavelength	λ_{PEAK}		600		nm	
	Dominant Wavelength[3]	λ_d		603		nm	
	Reverse Voltage/Segment or DP[4]	V_R	3.0	30		V	I_R = 100 µA
	Temperature Coefficient of V_F/ Segment or DP	ΔV_F/°C		-2		mV/°C	
	Thermal Resistance LED Junction-to-Pin	$R\theta_{J\text{-}PIN}$		200		°C/W/Seg	

chanhvinh.com

Yellow

Device Series HDSP-	Parameter	Symbol	Min.	Typ.	Max.	Units	Test Conditions
740x	Luminous Intensity/Segment[1,2,7] (Digit Average)	I_V	225	980		µcd	I_F = 5 mA
				5390			I_F = 20 mA
	Forward Voltage/Segment or DP	V_F		2.2	2.5	V	I_F = 20 mA
	Peak Wavelength	λ_{PEAK}		583		nm	
	Dominant Wavelength[3,9]	λ_d	581.5	586	592.5	nm	
	Reverse Voltage/Segment or DP[4]	V_R	3.0	50.0		V	I_R = 100 µA
	Temperature Coefficient of V_F/ Segment or DP	ΔV_F/°C		-2		mV/°C	
	Thermal Resistance LED Junction-to-Pin	$R\theta_{J\text{-}PIN}$		200		°C/W/Seg	

High Performance Green

Device Series HDSP-	Parameter	Symbol	Min.	Typ.	Max.	Units	Test Conditions
780x	Luminous Intensity/Segment[1,2,8] (Digit Average)	I_V	860	3000		µcd	I_F = 10 mA
				6800			I_F = 20 mA
	Forward Voltage/Segment or DP	V_F		2.1	2.5	V	I_F = 20 mA
	Peak Wavelength	λ_{PEAK}		566		nm	
	Dominant Wavelength[3,9]	λ_d		571	577	nm	
	Reverse Voltage/Segment or DP[4]	V_R	3.0	50.0		V	I_R = 100 µA
	Temperature Coefficient of V_F/ Segment or DP	ΔV_F/°C		-2		mV/°C	
	Thermal Resistance LED Junction-to-Pin	$R\theta_{J\text{-}PIN}$		200		°C/W/Seg	

Notes:
1. Case temperature of device immediately prior to the intensity measurement is 25°C.
2. The digits are categorized for luminous intensity. The intensity category is designated by a letter on the side of the package.
3. The dominant wavelength, ld, is derived from the CIE chromaticity diagram and is that single wavelength which defines the color of the device.
4. Typical specification for reference only. Do not exceed absolute maximum ratings.
5. For low current operation the AlGaAs HDSP-A101 series displays are recommended.
6. For low current operation the HER HDSP-7511 series displays are recommended.
7. For low current operation the Yellow HDSP-A801 series displays are recommended.
8. For low current operation the Green HDSP-A901 series displays are recommended.
9. The yellow (HDSP-7400) and Green (HDSP-7800) displays are categorized for dominant wavelength. The category is designated by a number adjacent to the luminous intensity category letter.

chanhvinh.com

AlGaAs Red

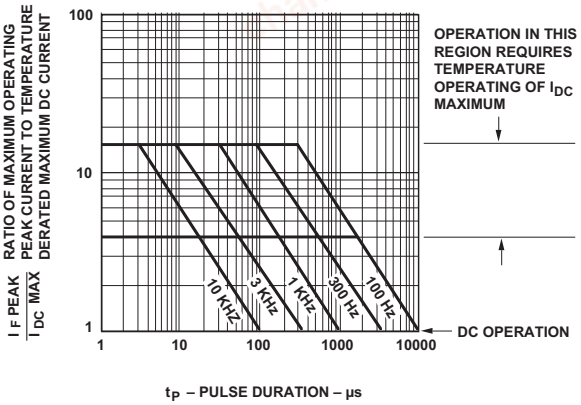

Figure 1. Maximum Allowed Peak Current vs. Pulse Duration – AlGaAs Red.

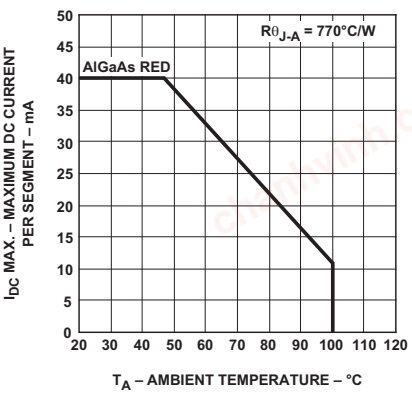

Figure 2. Maximum Allowable DC Current per Segment as a Function of Ambient Temperature.

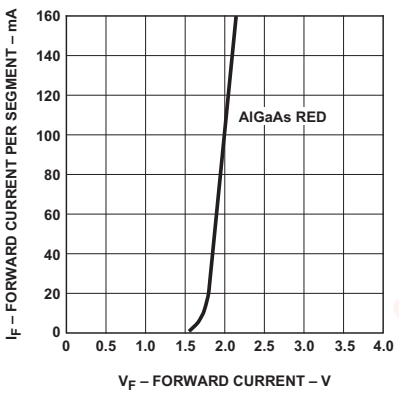

Figure 3. Forward Current vs. Forward Voltage.

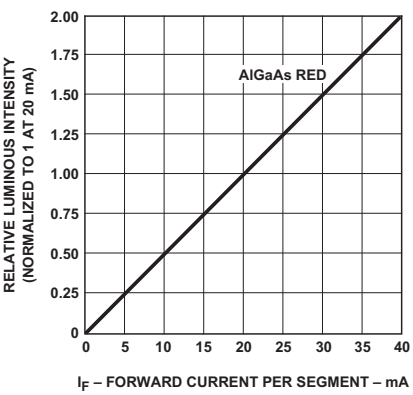

Figure 4. Relative Luminous Intensity vs. DC Forward Current.

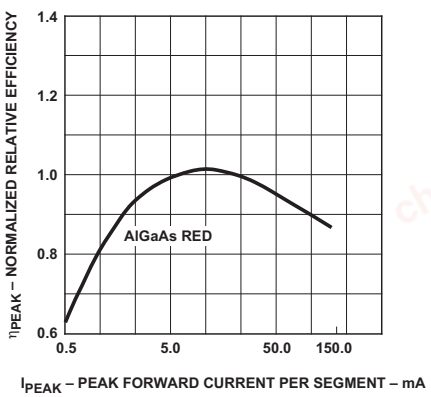

Figure 5. Relative Efficiency (Luminous Intensity per Unit Current) vs. Peak Current.

chanhvinh.com

HER, Yellow, Green, Orange

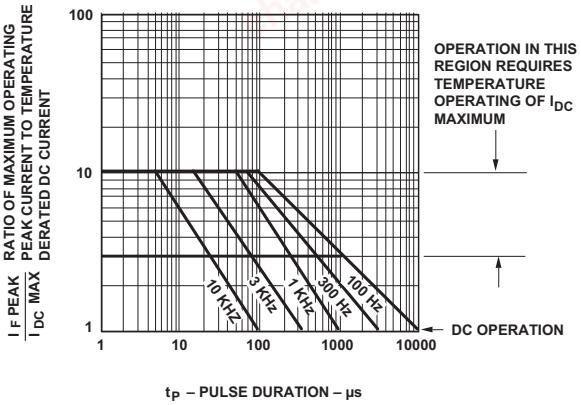

Figure 6. Maximum Tolerable Peak Current vs. Pulse Duration – HER, Orange.

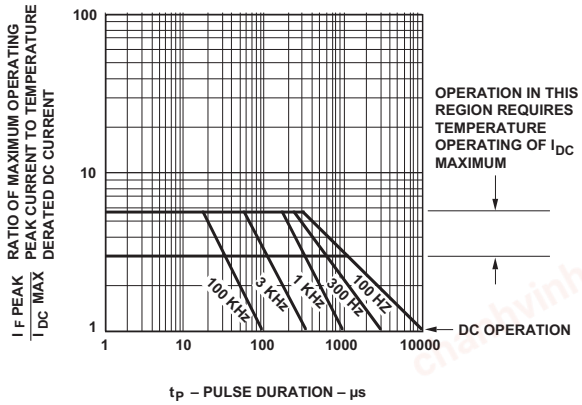

Figure 7. Maximum Tolerable Peak Current vs. Pulse Duration – Yellow.

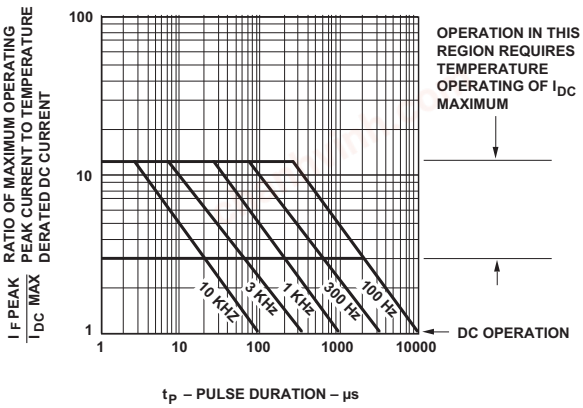

Figure 8. Allowable Peak Current vs. Pulse Duration – Green.

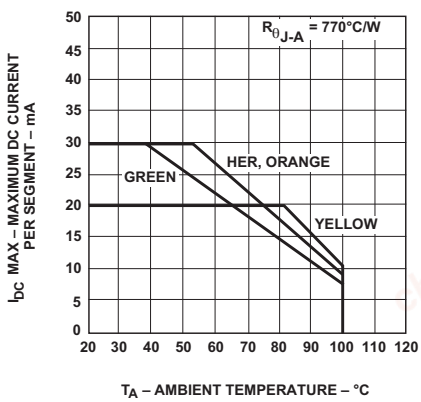

Figure 9. Maximum Allowable DC Current per Segment as a Function of Ambient Temperature.

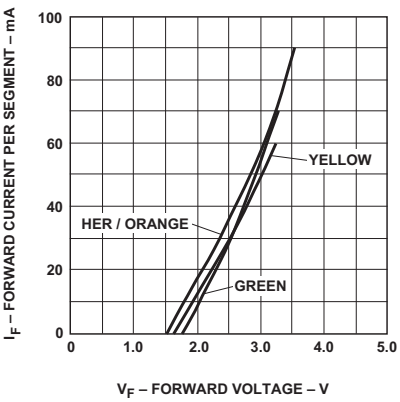

Figure 10. Forward Current vs. Forward Voltage Characteristics.

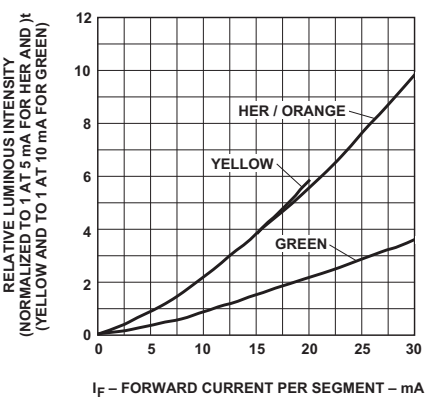

Figure 11. Relative Luminous Intensity vs. DC Forward Current.

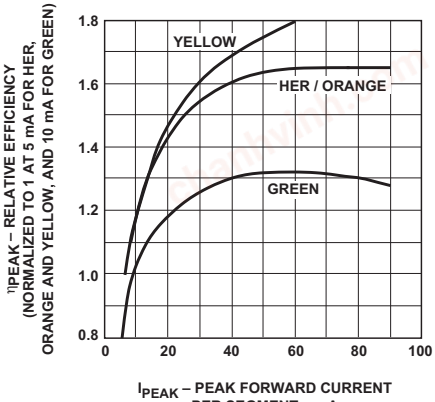

Figure 12. Relative Efficiency (Luminous Intensity per Unit Current) vs. Peak Current.

chanhvinh.com

Intensity Bin Limits (mcd)

AlGaAs Red

HDSP-A15x		
IV Bin Category	**Min.**	**Max.**
M	7.07	13.00
N	10.60	19.40
O	15.90	29.20
P	23.90	43.80
Q	35.80	65.60

HER

HDSP-750x		
IV Bin Category	**Min.**	**Max.**
B	0.342	0.630
C	0.516	0.946
D	0.774	1.418
E	1.160	2.127
F	1.740	3.190
G	2.610	4.785
H	3.915	7.177

Orange

HDSP-A40x		
IV Bin Category	**Min.**	**Max.**
A	0.284	0.433
B	0.354	0.541
C	0.443	0.677
D	0.554	0.846
E	0.692	1.057
F	0.856	1.322
G	1.082	1.652
H	1.352	2.066
I	1.692	2.581
J	2.114	3.227
K	2.641	4.034
L	3.300	5.042
M	4.127	6.303
N	5.157	7.878

Yellow

HDSP-740x		
IV Bin Category	**Min.**	**Max.**
B	0.229	0.387
C	0.317	0.582
D	0.476	0.872
E	0.714	1.311
F	1.073	1.967
G	1.609	2.950
H	2.413	4.425

Green

HDSP-780x		
IV Bin Category	**Min.**	**Max.**
H	0.86	1.58
I	1.29	2.37
J	1.94	3.55
K	2.90	5.33
L	4.37	8.01

chanhvinh.com

Color Categories

		Dominant Wavelength (nm)	
Color	**Bin**	**Min.**	**Max.**
Yellow	1	581.50	585.00
	3	584.00	587.50
	2	586.50	590.00
	4	589.00	592.50
Green	2	573.00	577.00
	3	570.00	574.00
	4	567.00	571.00
	5	564.00	568.00

Note:
All categories are established for classification of products. Products may not be available in all categories. Please contact your Avago representatives for further clarification/information.

Contrast Enhancement

For information on contrast enhancement, please see Application Note 1015.

Soldering/Cleaning

Cleaning agents from the ketone family (acetone, methyl ethyl ketone, etc.) and from the chlorinated hydrocarbon family (methylene chloride, trichloroethylene, carbon tetrachloride, etc.) are not recommended for cleaning LED parts. All of these various solvents attack or dissolve the encapsulating epoxies used to form the package of plastic LED parts.

For information on soldering LEDs, please refer to Application Note 1027.

For product information and a complete list of distributors, please go to our web site: **www.avagotech.com**

Avago, Avago Technologies, and the A logo are trademarks of Avago Technologies in the United States and other countries.
Data subject to change. Copyright © 2005-2010 Avago Technologies. All rights reserved. Obsoletes 5988-4434EN
AV02-2553EN - August 30, 2010