chanhvinh.com

HCPL-181

Phototransistor Optocoupler SMD Mini-Flat Type

AVAGO TECHNOLOGIES

Data Sheet

Lead (Pb) Free
RoHS 6 fully compliant

RoHS 6 fully compliant options available;
-xxxE denotes a lead-free product

Description

The HCPL-181 contains a light emitting diode optically coupled to a phototransistor. It is packaged in a 4-pin mini-flat SMD package with a 2.0 mm profile. The small dimension of this product allows significant space saving. The package volume is 30% smaller than that of conventional DIP type. Input-output isolation voltage is 3750 Vrms. Response time, t_r, is typically 4 µs and minimum CTR is 50% at input current of 5 mA.

Schematic

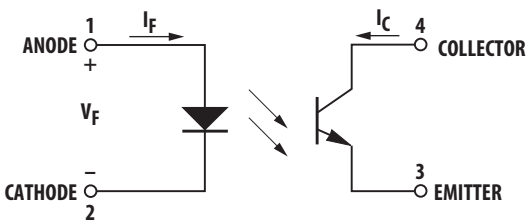

Functional Diagram

PIN NO. AND INTERNAL CONNECTION DIAGRAM

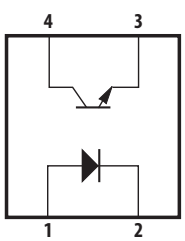

1. ANODE
2. CATHODE
3. EMITTER
4. COLLECTOR

Features

- Current Transfer Ratio
  (CTR: min. 50% at I_F = 5 mA, V_{CE} = 5 V)
- High input-output isolation voltage
  (V_{iso} = 3750 Vrms)
- High collector-emitter voltage (V_{CEO} = 80 V)
- Response time
  (t_r: typ., 4 µs at V_{CE} = 2 V, I_C = 2 mA, R_L = 100 Ω)
- Mini-flat package (2.0 mm profile) in tape and reel package
- UL approved
- CSA approved
- IEC/EN/DIN EN 60747-5-2 approved
- Options available:
  – IEC/EN/DIN EN 60747-5-2 approvals (060)

Applications

- I/O interfaces for computers
- System appliances, measuring instruments
- Signal transmission between circuits of different potentials and impedances
- Feedback circuit in power supply

CAUTION: *It is advised that normal static precautions be taken in handling and assembly of this component to prevent damage and/or degradation which may be induced by ESD.*

chanhvinh.com

Ordering Information

HCPL-181 is UL Recognized with 3750 Vrms for 1 minute per UL1577 and is approved under CSA Component Acceptance Notice #5, File CA 88324

	RoHS Compliant Option									
Part Number	Rank '0' 50%<CTR <600%	Rank 'A' 80%<CTR <160%	Rank 'B' 130%<CTR <260%	Rank 'C' 200%<CTR <400%	Rank 'D' 300%<CTR <600%	Package	Surface Mount	Tape & Reel	IEC/EN/DIN EN 60747-5-2	Quantity
HCPL-181	-000E	-00AE	-00BE	-00CE	-00DE	SO-4	X	X		3000 pcs per reel
	-060E	-06AE	-06BE	-06CE	-06DE	SO-4	X	X	X	3000 pcs per reel

To order, choose a part number from the part number column and combine with the desired option from the option column to form an order entry.

Example 1:
HCPL-181-00AE to order product of Miniflat-4 DC Surface Mount package in Tape and Reel packaging with 80%<CTR<160% and RoHS compliant.

Example 2:
HCPL-181-060E to order product of Miniflat-4 DC Surface Mount package in Tape and Reel packaging with 50%<CTR<600%, IEC/EN/DIN EN60747-5-2 Safety Approval and RoHS compliant.

Option datasheets are available. Contact your Avago sales representative or authorized distributor for information.

chanhvinh.com

Package Outline Drawings

HCPL-181-000E

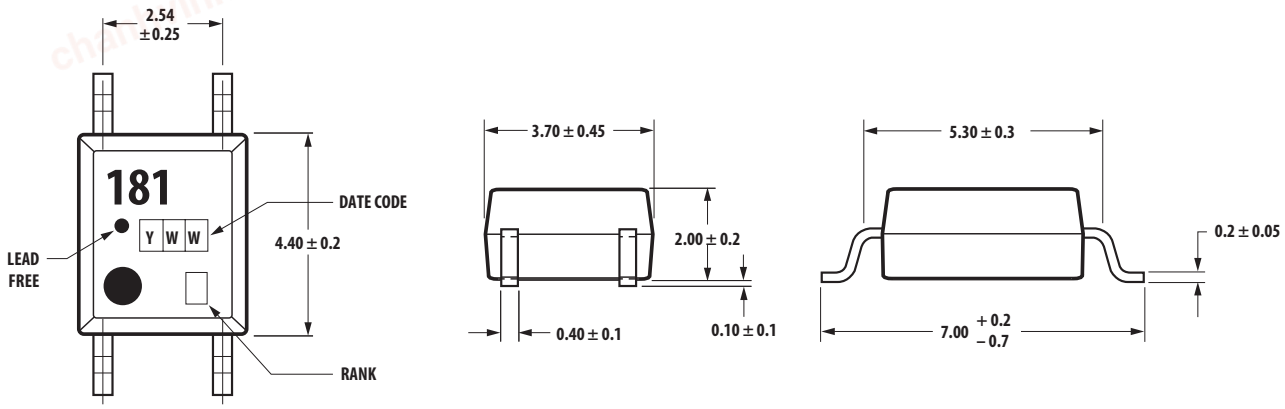

DIMENSIONS IN MILLIMETERS.

HCPL-181-060E

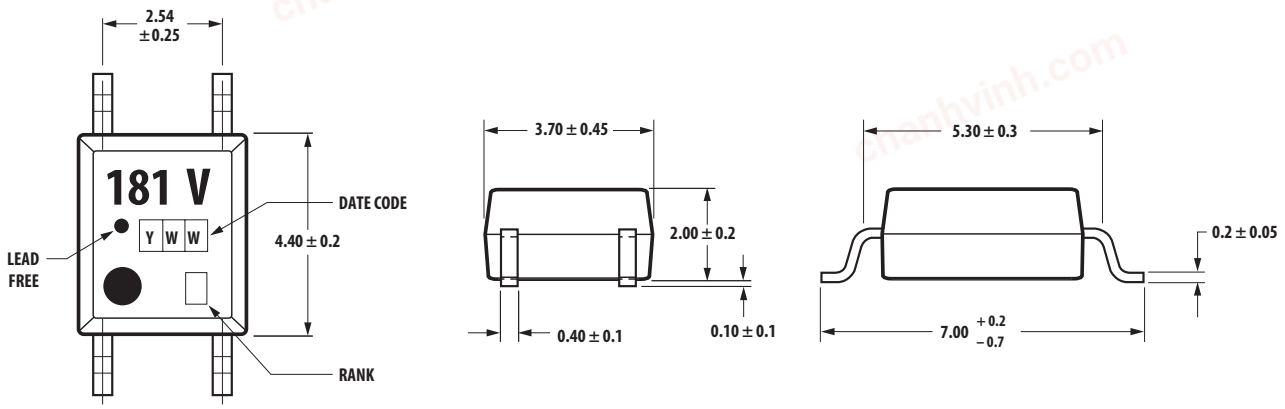

DIMENSIONS IN MILLIMETERS.

Solder Reflow Temperature Profile

1. One-time soldering reflow is recommended within the condition of temperature and time profile shown at right.
2. When using another soldering method such as infrared ray lamp, the temperature may rise partially in the mold of the device. Keep the temperature on the package of the device within the condition of (1) above.

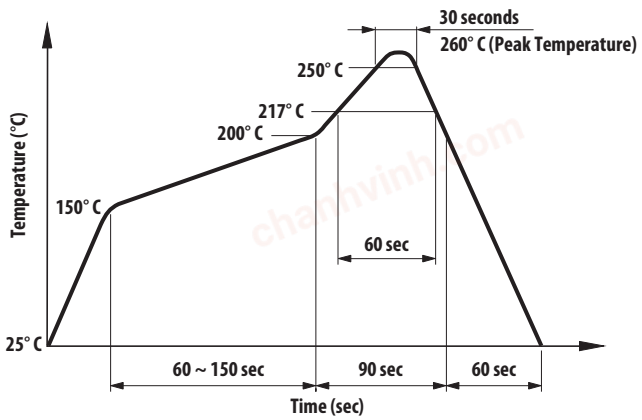

Note: Non-halide flux should be used.

chanhvinh.com

Absolute Maximum Ratings ($T_A = 25^\circ C$)

Storage Temperature, T_S	–55°C to +155°C
Operating Temperature, T_A	–55°C to +100°C
Lead Solder Temperature, max. (1.6 mm below seating plane)	260°C for 10 s
Average Forward Current, I_F	50 mA
Reverse Input Voltage, V_R	6 V
Input Power Dissipation, P_I	70 mW
Collector Current, I_C	50 mA
Collector-Emitter Voltage, V_{CEO}	80 V
Emitter-Collector Voltage, V_{ECO}	6 V
Collector Power Dissipation	150 mW
Total Power Dissipation	170 mW
Isolation Voltage, V_{iso} (AC for 1 minute, R.H. = 40 ~ 60%)	3750 Vrms

Rank Mark	CTR (%)	Conditions
A	80 ~ 160	I_F = 5 mA, V_{CE} = 5 V, T_A = 25°C
B	130 ~ 260	
C	200 ~ 400	
D	300 ~ 600	

Electrical Specifications ($T_A = 25^\circ C$)

Parameter	Symbol	Min.	Typ.	Max.	Units	Test Conditions
Forward Voltage	V_F	–	1.2	1.4	V	I_F = 20 mA
Reverse Current	I_R	–	–	10	µA	V_R = 4 V
Terminal Capacitance	C_t	–	30	250	pF	V = 0, f = 1 KHz
Collector Dark Current	I_{CEO}	–	–	100	nA	V_{CE} = 20 V
Collector-Emitter Breakdown Voltage	BV_{CEO}	80	–	–	V	I_C = 0.1 mA, I_F = 0
Emitter-Collector Breakdown Voltage	BV_{ECO}	6	–	–	V	I_E = 10 µA, I_F = 0
Collector Current	I_C	2.5	–	30	mA	I_F = 5 mA, V_{CE} = 5 V
*Current Transfer Ratio	CTR	50	–	600	%	
Collector-Emitter Saturation Voltage	$V_{CE(sat)}$	–	–	0.2	V	I_F = 20 mA, I_C = 1 mA
Response Time (Rise)	t_r	–	4	18	µs	V_{CC} = 2 V, I_C = 2 mA
Response Time (Fall)	t_f	–	3	18	µs	R_L = 100 Ω
Isolation Resistance	R_{iso}	5 x 10^{10}	1 x 10^{11}	–	Ω	DC 500 V 40 ~ 60% R.H.
Floating Capacitance	C_f	–	0.6	1.0	pF	V = 0, f = 1 MHz

$$* \text{CTR} = \frac{I_C}{I_F} \times 100\%$$

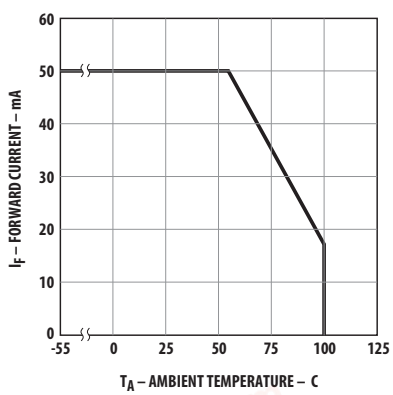

Figure 1. Forward current vs. temperature.

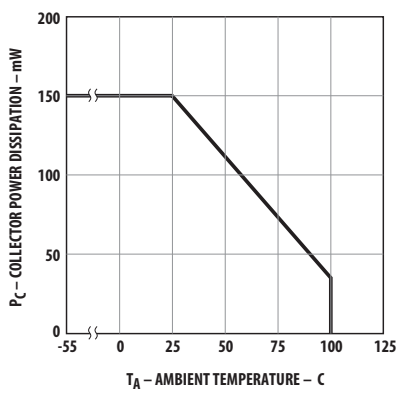

Figure 2. Collector power dissipation vs. temperature.

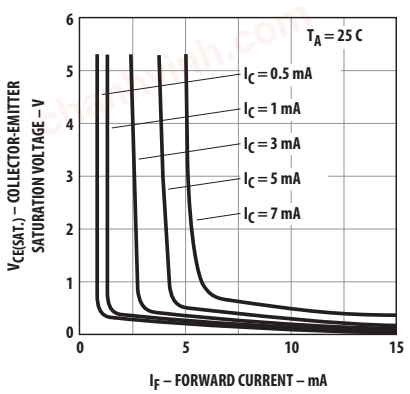

Figure 3. Collector-emitter saturation voltage vs. forward current.

chanhvinh.com

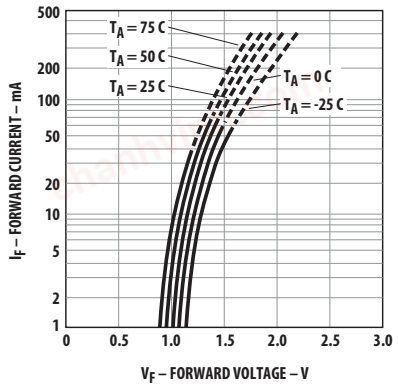

Figure 4. Forward current vs. forward voltage.

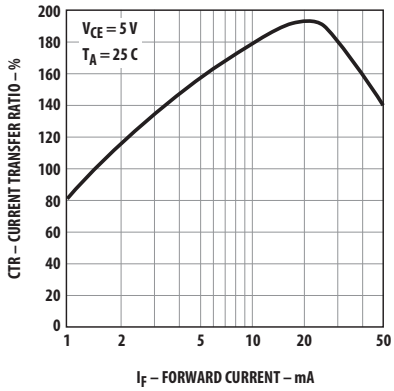

Figure 5. Current transfer ratio vs. forward current.

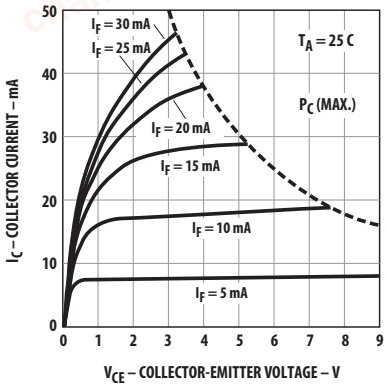

Figure 6. Collector current vs. collector-emitter voltage.

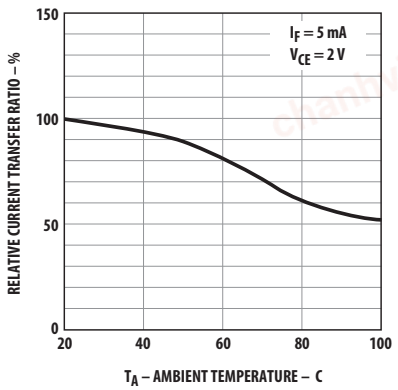

Figure 7. Relative current transfer ratio vs. temperature.

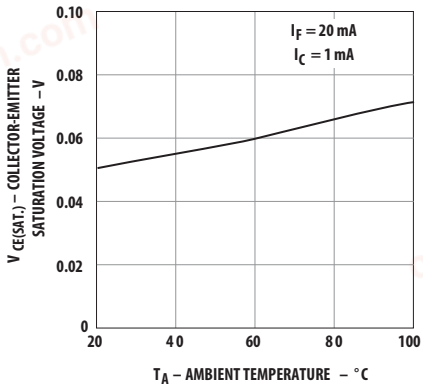

Figure 8. Collector-emitter saturation voltage vs. temperature.

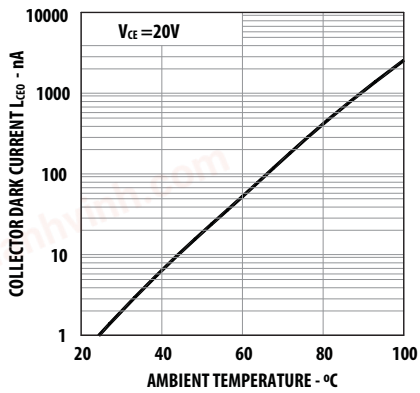

Figure 9. Collector dark current vs. temperature.

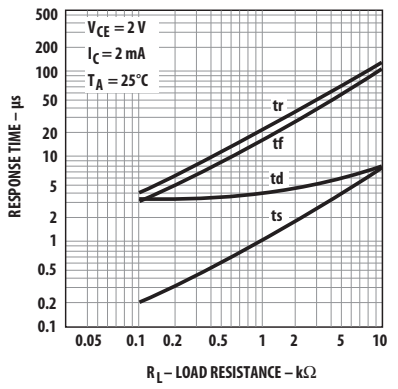

Figure 10. Response time vs. load resistance.

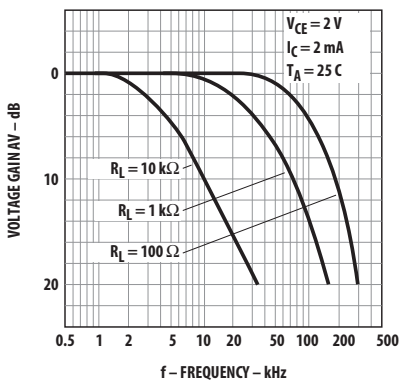

Figure 11. Frequency response.

chanhvinh.com

Test Circuit for Response Time

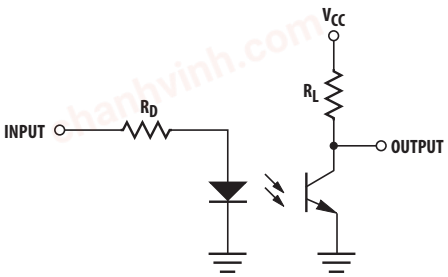

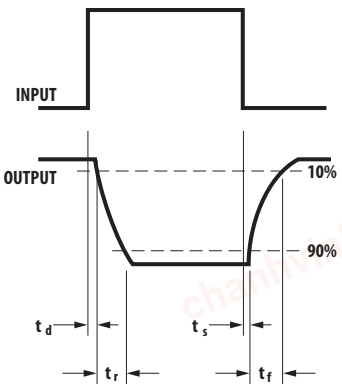

Test Circuit for Frequency Response

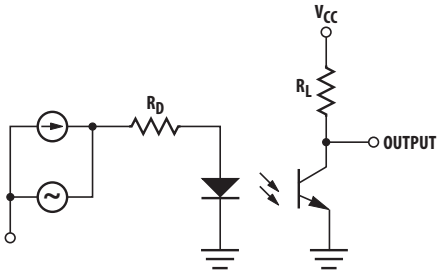

For product information and a complete list of distributors, please go to our web site: **www.avagotech.com**

Avago, Avago Technologies, and the A logo are trademarks of Avago Technologies in the United States and other countries.
Data subject to change. Copyright © 2005-2011 Avago Technologies. All rights reserved.
AV02-0774EN - September 13, 2011