chanhvinh.com

HCPL-4701/-4731/-070A/-073A

Very Low Power Consumption High Gain Optocouplers

AVAGO TECHNOLOGIES

Data Sheet

Lead (Pb) Free
RoHS 6 fully compliant

RoHS 6 fully compliant options available;
-xxxE denotes a lead-free product

Features

- **Ultra low input current capability - 40 μA**
- **Specified for 3 V operation**
  Typical power consumption: <1 mW
  Input power: <50 μW
  Output power: <500 μW
- **Will operate with V_{CC} as low as 1.6 V**
- **High current transfer ratio: 3500% at I_F = 40 μA**
- **TTL and CMOS compatible output**
- **Specified ac and dc performance over temperature: 0°C to 70°C**
- **Safety approval:**
  UL recognized – 3750 V rms for 1 minute and
  5000 V rms* for 1 minute per UL1577
  CSA approved
  IEC/EN/DIN EN 60747-5-2 approved with
  V_{IORM} = 630 V peak
  (Option 060) for HCPL-4701
- **8-pin product compatible with 6N138/6N139 and HCPL-2730/HCPL-2731**
- **Available in 8-Pin DIP and SOIC-8 footprint**
- **Through hole and surface mount assembly available**

Applications

- **Battery operated applications**
- **ISDN telephone interface**
- **Ground isolation between logic families – TTL, LSTTL, CMOS, HCMOS, HL-CMOS, LV-HCMOS**
- **Low input current line receiver**
- **EIA RS-232C line receiver**
- **Telephone ring detector**
- **AC line voltage status indicator – low input power dissipation**
- **Low power systems – ground isolation**
- **Portable system I/O interface**

Functional Diagram

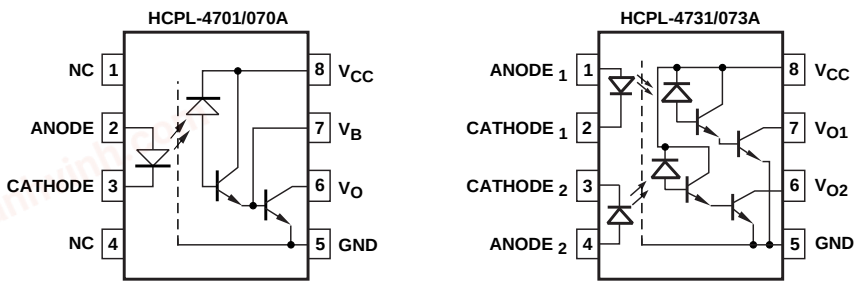

TRUTH TABLE

LED	V_O
ON	LOW
OFF	HIGH

*5000 V rms/1 Minute rating is for Option 020 (HCPL-4701 and HCPL-4731) products only.
A 0.1 μF bypass capacitor connected between pins 8 and 5 is recommended.

CAUTION: It is advised that normal static precautions be taken in handling and assembly of this component to prevent damage and/or degradation which may be induced by ESD.

chanhvinh.com

Description

These devices are very low power consumption, high gain single and dual channel optocouplers. The HCPL-4701 represents the single channel 8-Pin DIP configuration and is pin compatible with the industry standard 6N139. The HCPL-4731 represents the dual channel 8-Pin DIP configuration and is pin compatible with the popular standard HCPL-2731. The HCPL-070A and HCPL-073A are the equivalent single and dual channel products in an SO-8 footprint. Each channel can be driven with an input current as low as 40 µA and has a typical current transfer ratio of 3500%.

These high gain couplers use an AlGaAs LED and an integrated high gain photodetector to provide an extremely high current transfer ratio between input and output. Separate pins for the photodiode and output stage results in TTL compatible saturation voltages and high speed operation. Where desired, the V_{CC} and V_O terminals may be tied together to achieve conventional Darlington operation (single channel package only).

These devices are designed for use in CMOS, LSTTL or other low power applications. They are especially well suited for ISDN telephone interface and battery operated applications due to the low power consumption. A 700% minimum current transfer ratio is guaranteed from 0°C to 70°C operating temperature range at 40 µA of LED current and $V_{CC} \geq 3$ V.

The SO-8 does not require “through holes” in a PCB. This package occupies approximately one-third the footprint area of the standard dual-in-line package. The lead profile is designed to be compatible with standard surface mount processes.

Selection Guide

8-Pin DIP (300 Mil)		Small Outline SO-8		Widebody Package (400 mil)	Minimum Input ON Current (I_F)	Minimum CTR	Absolute Maximum V_{CC}	Hermetic
Single Channel Package	Dual Channel Package HCPL-	Single Channel Package HCPL-	Dual Channel Package HCPL-	Single Channel Package				Single and Dual Channel Packages HCPL-
6N139[1]	2731[1]	0701[1]	0731[1]	HCNW139[1]	0.5 mA	400%	18 V	
6N138[1]	2730[1]	0700[1]	0730[1]	HCNW138[1]	1.6 mA	300%	7 V	
HCPL-4701	4731	070A	0730A		40 µA	800%	18 V	
					0.5 mA	300%	20 V	5701[1] 5700[1] 5731[1] 5730[1]

Notes:
1. Technical data are on separate Avago publication.

chanhvinh.com

Ordering Information

HCPL-4701, HCPL-4731, HCPL-070A and HCPL-073A are UL Recognized with 3750 Vrms for 1 minute per UL1577 and are approved under CSA Component Acceptance Notice #5, File CA 88324.

Part Number	Option		Package	Surface Mount	Gull Wing	Tape & Reel	UL 5000 Vrms / 1 Minute rating	IEC / EN / DIN EN 60747-5-2	Quantity
	RoHS Compliant	non RoHS Compliant							
	-000E	no option	300 mil DIP-8						50 per tube
	-300E	-300		X	X				50 per tube
	-500E	-500		X	X	X			1000 per reel
HCPL-4701	-020E	-020					X		50 per tube
HCPL-4731	-320E	-320		X	X		X		50 per tube
	-520E	-520		X	X	X	X		1000 per reel
	-060E	-060						X	50 per tube
	-360E	-360		X	X			X	50 per tube
	-560E	-560		X	X	X		X	1000 per reel
	-000E	no option	SO-8						100 per tube
HCPL-070A	-500E	-500		X	X	X			1500 per reel
HCPL-073A	-060E	-060						X	100 per tube
	-560E	-560		X	X	X		X	1500 per reel

To order, choose a part number from the part number column and combine with the desired option from the option column to form an order entry.

Example 1:
HCPL-4701-560E to order product of 300 mil DIP Gull Wing Surface Mount package in Tape and Reel packaging with IEC/EN/DIN EN 60747-5-2 Safety Approval and RoHS compliant.

Example 2:
HCPL-070A to order product of Surface Mount Small Outline SO-8 package and non RoHS compliant.

Option datasheets are available. Contact your Avago sales representative or authorized distributor for information.

Remarks: The notation '#XXX' is used for existing products, while (new) products launched since July 15, 2001 and RoHS compliant will use '–XXXE.'

chanhvinh.com

Schematic

HCPL-4701 and HCPL-070A

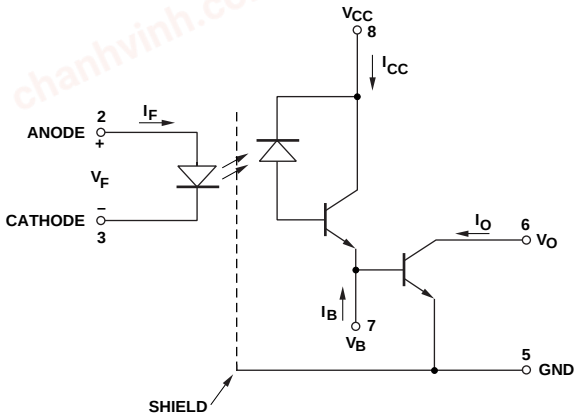

HCPL-4731 and HCPL-073A

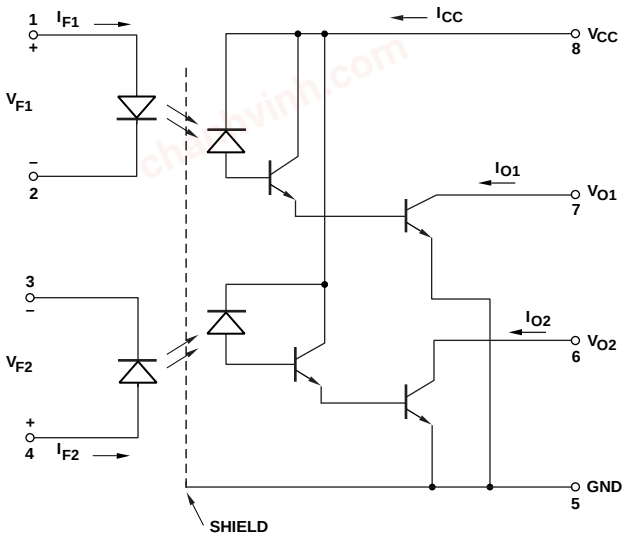

USE OF A 0.1 µF BYPASS CAPACITOR CONNECTED BETWEEN PINS 5 AND 8 IS RECOMMENDED (SEE NOTE 8)

chanhvinh.com

Package Outline Drawings

8-Pin DIP Package (HCPL-4701, HCPL-4731)

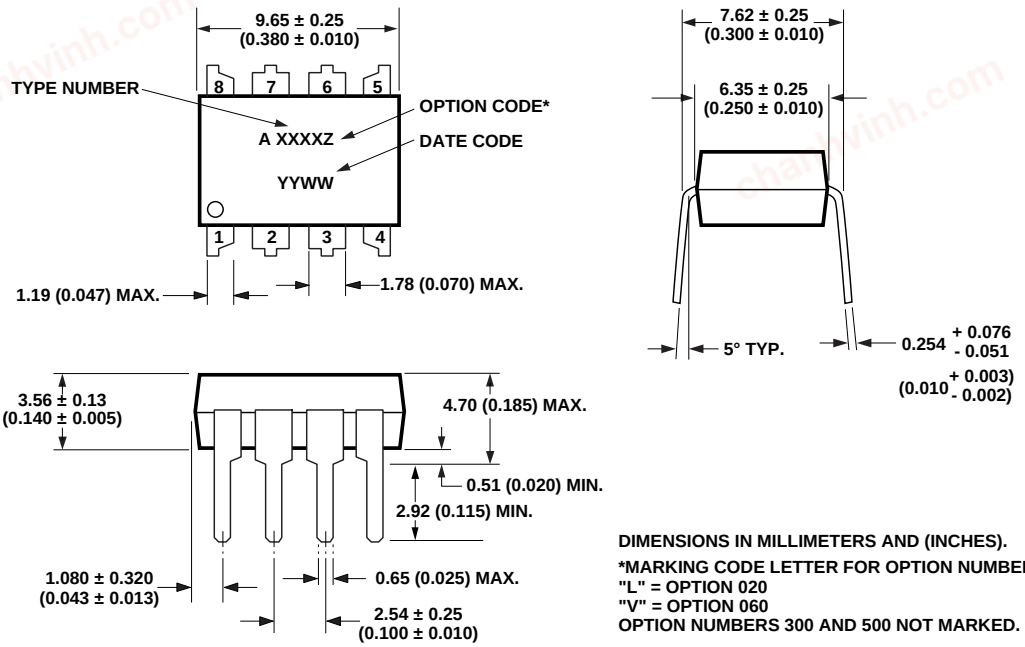

DIMENSIONS IN MILLIMETERS AND (INCHES).

*MARKING CODE LETTER FOR OPTION NUMBERS
"L" = OPTION 020
"V" = OPTION 060
OPTION NUMBERS 300 AND 500 NOT MARKED.

NOTE: FLOATING LEAD PROTRUSION IS 0.25 mm (10 mils) MAX.

8-Pin DIP Package with Gull Wing Surface Mount Option 300 (HCPL-4701, HCPL-4731)

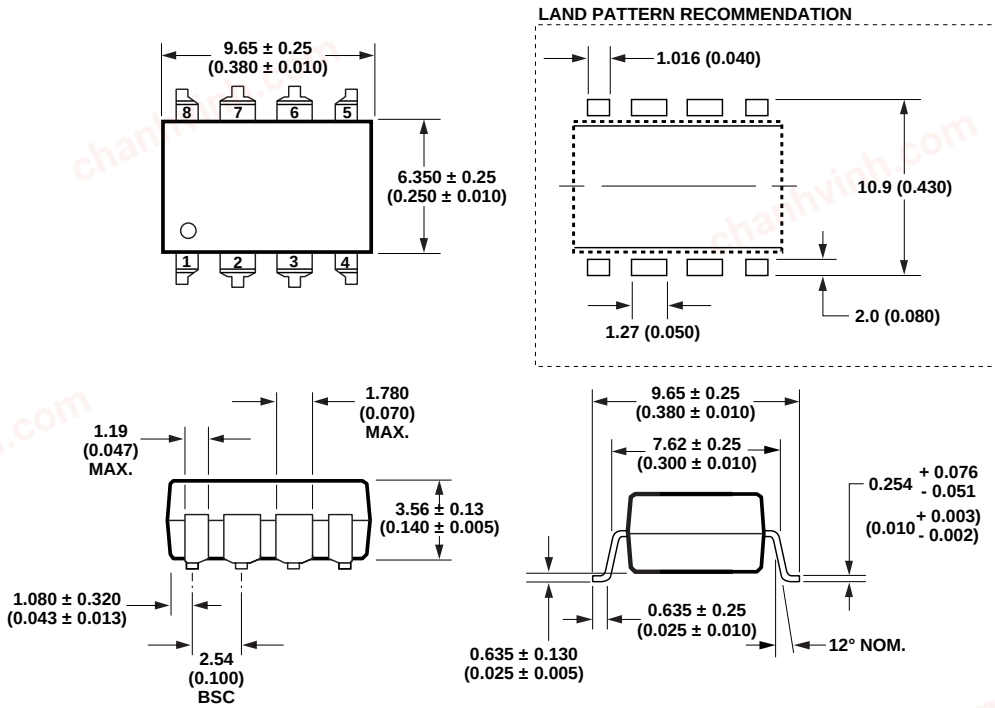

DIMENSIONS IN MILLIMETERS (INCHES).
LEAD COPLANARITY = 0.10 mm (0.004 INCHES).

NOTE: FLOATING LEAD PROTRUSION IS 0.25 mm (10 mils) MAX.

chanhvinh.com

Small-Outline SO-8 Package (HCPL-070A, HCPL-073A)

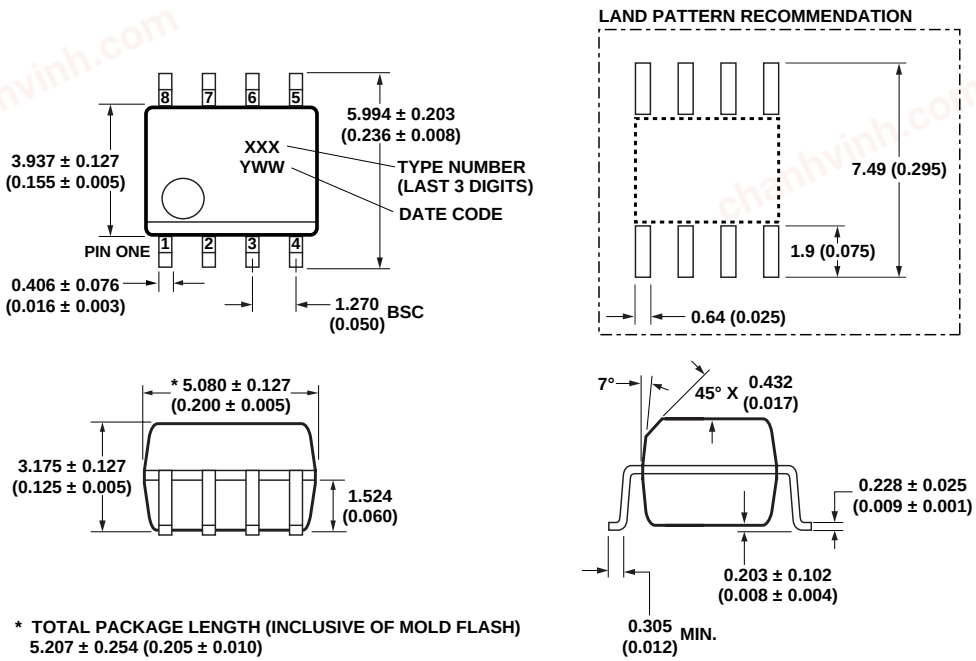

* TOTAL PACKAGE LENGTH (INCLUSIVE OF MOLD FLASH)
5.207 ± 0.254 (0.205 ± 0.010)

DIMENSIONS IN MILLIMETERS (INCHES).
LEAD COPLANARITY = 0.10 mm (0.004 INCHES) MAX.

NOTE: FLOATING LEAD PROTRUSION IS 0.15 mm (6 mils) MAX.

Solder Reflow Thermal Profile

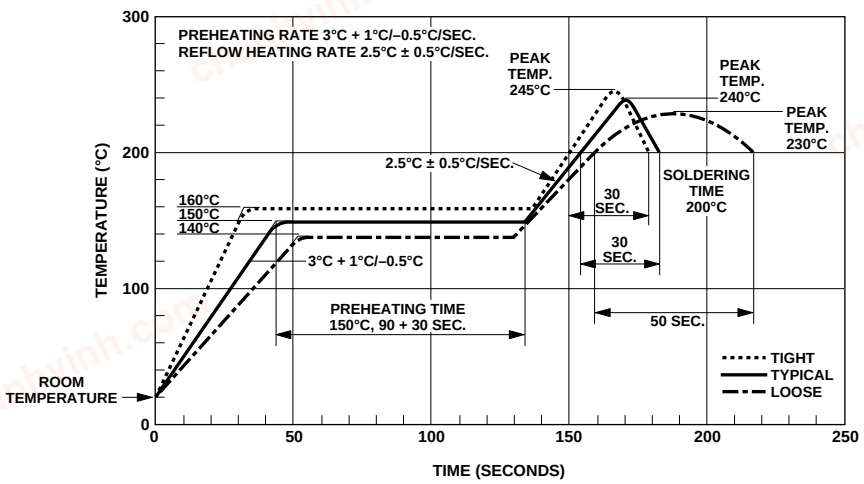

Note: Non-halide flux should be used.

Figure 1a. Solder Reflow Thermal Profile.

chanhvinh.com

Recommended Pb-Free IR Profile

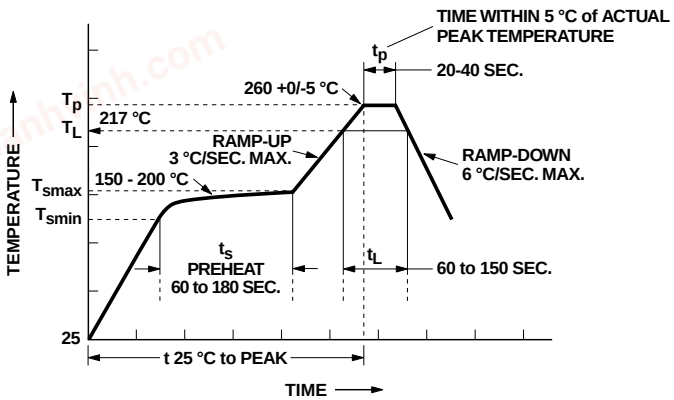

NOTES:
THE TIME FROM 25 °C to PEAK TEMPERATURE = 8 MINUTES MAX.
T_{smax} = 200 °C, T_{smin} = 150 °C

Note: Non-halide flux should be used.

Figure 1b. Pb-Free IR Profile.

Regulatory Information

The HCPL-4701/4731 and HCPL-070A/073A have been approved by the following organizations:

UL

Recognized under UL 1577, Component Recognition Program, File E55361.

CSA

Approved under CSA Component Acceptance Notice #5, File CA 88324.

IEC/EN/DIN EN 60747-5-2

Approved under:
IEC 60747-5-2:1997 + A1:2002
EN 60747-5-2:2001 + A1:2002
DIN EN 60747-5-2 (VDE 0884 Teil 2):2003-01.
(Option 060 only)

Insulation Related Specifications

Parameter	Symbol	8-Pin DIP (300 Mil) Value	SO-8 Value	Units	Conditions
Minimum External Air Gap (External Clearance)	L(101)	7.1	4.9	mm	Measured from input terminals to output terminals, shortest distance through air.
Minimum External Tracking (External Creepage)	L(102)	7.4	4.8	mm	Measured from input terminals to output terminals, shortest distance path along body.
Minimum Internal Plastic Gap (Internal Clearance)		0.08	0.08	mm	Through insulation distance, conductor to conductor, usually the direct distance between the photoemitter and photodetector inside the optocoupler cavity.
Tracking Resistance (Comparative Tracking Index)	CTI	200	200	Volts	DIN IEC 112/ VDE 0303 Part 1
Isolation Group		IIIa	IIIa		Material Group DIN VDE 0110, 1/89, Table 1)

Option 300 – surface mount classification is Class A in accordance with CECC 00802.

chanhvinh.com

IEC/EN/DIN EN 60747-5-2 Insulation Related Characteristics (HCPL-4701 OPTION 060 ONLY)

Description	Symbol	Characteristic	Units
Installation classification per DIN VDE 0110/1.89, Table 1 for rated mains voltage ≤ 300 V rms		I-IV	
for rated mains voltage ≤ 450 V rms		I-III	
Climatic Classification		55/85/21	
Pollution Degree (DIN VDE 0110/1.89)		2	
Maximum Working Insulation Voltage	V_{IORM}	630	V peak
Input to Output Test Voltage, Method b* V_{IORM} x 1.87 = V_{PR}, 100% Production Test with t_m = 1 sec, Partial Discharge < 5 pC	V_{PR}	1181	V peak
Input to Output Test Voltage, Method a* V_{IORM} x 1.5 = V_{PR}, Type and sample test, t_m = 60 sec, Partial Discharge < 5 pC	V_{PR}	945	V peak
Highest Allowable Overvoltage* (Transient Overvoltage, t_{ini} = 10 sec)	V_{IOTM}	6000	V peak
Safety Limiting Values (Maximum values allowed in the event of a failure, also see Figure 16, Thermal Derating curve.)			
Case Temperature	T_S	175	°C
Input Current	$I_{S,INPUT}$	230	mA
Output Power	$P_{S,OUTPUT}$	600	mW
Insulation Resistance at T_S, V_{IO} = 500 V	R_S	$>10^9$	Ω

*Refer to the front of the optocoupler section of the current catalog, under Product Safety Regulations section, IEC/EN/DIN EN 60747-5-2, for a detailed description.
Note: Isolation characteristics are guaranteed only within the safety maximum ratings which must be ensured by protective circuits in application.

chanhvinh.com

Absolute Maximum Ratings

(No Derating Required up to 70°C)

Parameter	Symbol	Minimum	Maximum	Units
Storage Temperature	T_S	-55	125	°C
Operating Temperature	T_A	-40	85	°C
Average Forward Input Current (HCPL-4701/4731)	$I_{F(AVG)}$		10	mA
Average Forward Input Current (HCPL-070A/073A)	$I_{F(AVG)}$		5	mA
Peak Transient Input Current (HCPL-4701/4731) (50% Duty Cycle, 1 ms Pulse Width)	I_{FPK}		20	mA
Peak Transient Input Current (HCPL-070A/073A) (50% Duty Cycle, 1 ms Pulse Width)	I_{FPK}		10	mA
Reverse Input Voltage	V_R		2.5	V
Input Power Dissipation (Each Channel)	P_I		15	mW
Output Current (Each Channel)	I_O		60	mA
Emitter Base Reverse Voltage (HCPL-4701/070A)	V_{EB}		0.5	V
Output Transistor Base Current (HCPL-4701/070A)	I_B		5	mA
Supply Voltage	V_{CC}	-0.5	18	V
Output Voltage	V_O	-0.5	18	V
Output Power Dissipation (Each Channel)	P_O		100	mW
Total Power Dissipation (Each Channel)	P_T		115	mW
Lead Solder Temperature (for Through Hole Devices)	260°C for 10 sec., 1.6 mm below seating plane			
Reflow Temperature Profile (for SOIC-8 and Option #300)	See **Package Outline Drawings** section			

Recommended Operating Conditions

Parameter	Symbol	Min.	Max.	Units
Power Supply Voltage	V_{CC}*	1.6	18	V
Forward Input Current (ON)	$I_{F(ON)}$	40	5000	µA
Forward Input Voltage (OFF)	$V_{F(OFF)}$	0	0.8	V
Operating Temperature	T_A	0	70	°C

*See Note 1.

chanhvinh.com

Electrical Specifications

$0°C \le T_A \le 70°C$, $4.5\ V \le V_{CC} \le 20\ V$, $1.6\ mA \le I_{F(ON)} \le 5\ mA$, $0\ V \le V_{F(OFF)} \le 0.8\ V$, unless otherwise specified. All Typicals at $T_A = 25°C$. See note 8.

Parameter	Symbol	Device HCPL-	Min.	Typ.*	Max.	Units	Test Conditions	Fig.	Note
Current Transfer Ratio	CTR		800	3500	25k	%	$I_F = 40\ \mu A$, $V_{CC} = 4.5\ V$, $V_O = 0.4\ V$	4, 5	2
			600	3000	8k		$I_F = 0.5\ mA$, $V_{CC} = 4.5\ V$, $V_O = 0.4\ V$		
			700	3200	25k		$I_F = 40\ \mu A$, $V_O = 0.4\ V$		
			500	2700	8k		$I_F = 0.5\ mA$, $V_O = 0.4\ V$		
Logic Low Output Voltage	V_{OL}			0.06	0.4	V	$I_F = 40\ \mu A$, $I_O = 280\ \mu A$	2, 3	
				0.04	0.4		$I_F = 0.5\ mA$, $I_O = 2.5\ mA$		
Logic High Output Current	I_{OH}			0.01	5	µA	$V_O = V_{CC} = 3$ to $7\ V$, $I_F = 0\ mA$		
				0.02	80		$V_O = V_{CC} = 18\ V$, $I_F = 0\ mA$		
Logic Low Supply Current	I_{CCL}	4701/070A		0.02	0.2	mA	$I_F = 40\ \mu A$, V_O = Open		
				0.1	1		$I_F = 0.5\ mA$, V_O = Open		
		4731/073A		0.04	0.4		$I_F = 40\ \mu A$, V_O = Open		
				0.2	2.0		$I_F = 0.5\ mA$, V_O = Open		
Logic High Supply Current	I_{CCH}	4701/070A		< 0.01	10	µA	$I_F = 0\ mA$, V_O = Open		
		4731/073A		< 0.01	20				
Input Forward Voltage	V_F		1.1	1.25	1.4	V	$I_F = 40$ to $500\ \mu A$, $T_A = 25°C$	6	
			0.95		1.5		$I_F = 40$ to $500\ \mu A$		
Input Reverse Breakdown Voltage	BV_R		3.0	5.0		V	$I_R = 100\ \mu A$, $T_A = 25°C$		
			2.5				$I_R = 100\ \mu A$		
Temperature Coefficient of Forward Voltage	$\Delta V_F/\Delta T_A$			-2.0		mV/°C	$I_F = 40\ \mu A$		
				-1.6			$I_F = 0.5\ mA$		
Input Capacitance	C_{IN}			18		pF	$f = 1\ MHz$, $V_F = 0\ V$		

*All typical values at $T_A = 25°C$ and $V_{CC} = 5\ V$, unless otherwise noted.

chanhvinh.com

Switching Specifications (AC)

Over Recommended Operating Conditions T_A = 0°C to 70°C, V_{CC} = 3 V to 18 V, unless otherwise specified.

Parameter	Symbol	Device HCPL-	Min.	Typ.*	Max.	Units	Test Conditions	Fig.	Note
Propagation Delay Time to Logic Low at Output	t_{PHL}			65	500	µs	I_F = 40 µA, R_L = 11 to 16 kΩ, V_{CC} = 3.3 to 5 V	7, 9	9, 10
				3	25		T_A = 25°C, I_F = 0.5 mA, R_L = 4.7 kΩ		
					30				
Propagation Delay Time to Logic High Output	t_{PLH}			70	500	µs	I_F = 40 µA, R_L = 11 to 16 kΩ, V_{CC} = 3.3 to 5 V	7, 9	9, 10
				34	60		T_A = 25°C, I_F = 0.5 mA, R_L = 4.7 kΩ		
		4701/4731			90				
		070A/073A			130				
Common Mode Transient Immunity at Logic High Output	$\|CM_H\|$		1,000	10,000		V/µs	I_F = 0 mA, R_L = 4.7 to 11 kΩ, V_{CM} = 10 V_{p-p}, T_A = 25°C,	8	6, 7
Common Mode Transient Immunity at Logic Low Output	$\|CM_L\|$		1,000	10,000		V/µs	I_F = 0.5 mA, R_L = 4.7 to 11 kΩ, $\|V_{CM}\|$ = 10 V_{p-p}, T_A = 25°C	8	6, 7
				2,000			I_F = 40 µA, R_L = 11 to 16 kΩ, $\|V_{CM}\|$ = 10 V_{p-p} V_{CC} = 3.3 to 5 V, T_A = 25°C		

*All typical values at T_A = 25°C and V_{CC} = 5 V, unless otherwise noted.

Package Characteristics

Parameter	Symbol	Device HCPL-	Min.	Typ.*	Max.	Units	Test Conditions	Fig.	Note
Input-Output Momentary Withstand Voltage**	V_{ISO}		3750			V rms	RH ≤ 50%, t = 1 min., T_A = 25°C		3, 4
Option 020		4701 4731	5000						3, 4a
Resistance (Input-Output)	R_{I-O}			10^{12}		Ω	V_{I-O} = 500 VDC RH ≤ 45%		3
Capacitance (Input-Output)	C_{I-O}			0.6		pF	f = 1 MHz		3
Insulation Leakage Current (Input-Input)	I_{I-I}	4731 073A		0.005		µA	RH ≤ 45%, t = 5 s, V_{I-I} = 500 VDC		5
Resistance (Input-Input)	R_{I-I}			10^{11}		Ω			
Capacitance (Input-Input)	C_{I-I}	4731		0.03		pF	f = 1 MHz		5
		073A		0.25					

*All typical values at T_A = 25°C and V_{CC} = 5 V.
**The Input-Output Momentary Withstand Voltage is a dielectric voltage rating that should not be interpreted as an input-output continuous voltage rating. For the continuous voltage rating refer to the IEC/EN/DIN EN 60747-5-2 Insulation Characteristics Table (if applicable), your equipment level safety specification or Avago Application Note 1074 entitled "Optocoupler Input-Output Endurance Voltage."

chanhvinh.com

Notes:

1. Specification information is available form the factory for 1.6 V operation. Call your local field sales office for further information.
2. DC CURRENT TRANSFER RATIO is defined as the ratio of output collector current, I_O, to the forward LED input current, I_F, times 100%.
3. Device considered a two terminal device: pins 1, 2, 3, and 4 shorted together, and pins 5, 6, 7, and 8 shorted together.
4. In accordance with UL 1577, each optocoupler is proof tested by applying an insulation test voltage ≥ 4500 V_{RMS} for 1 second (leakage detection current limit, $I_{I-O} \leq 5$ μA.

4a. In accordance with UL 1577, each optocoupler is proof tested by applying an insulation test voltage ≥ 6000 V_{RMS} for 1 second (leakage detection current limit, $I_{I-O} \leq 5$ μA. This test is performed before the 100% production test for partial discharge (Method b) shown in the IEC/EN/DIN EN 60747-5-2 Insulation Characteristics Table.

5. Measured between pins 1 and 2 shorted together, and pins 3 and 4 shorted together.
6. Common transient immunity in a Logic High level is the maximum tolerable (positive) dV_{CM}/dt on the leading edge of the common mode pulse, V_{CM}, to assure that the output will remain in a Logic High state (i.e., $V_O > 2.0$ V). Common transient immunity in a Logic Low level is he maximum tolerable (negative) dV_{CM}/dt on the trailing edge of the common mode pulse, V_{CM}, to assure that the output will remain in a Logic Low state (i.e., $V_O < 0.8$ V).
7. In applications where dV/dt may exceed 50,000 V/μs (such as static discharge) a series resistor, R_{CC}, should be included to protect the detector IC form destructively high surge currents. The recommended value is $R_{CC} = 220$ Ω.
8. Use of a 0.1 μF bypass capacitor connected between pins 8 and 5 adjacent to the device is recommended.
9. Pin 7 open for single channel product.
10. Use of resistor between pins 5 and 7 will decrease gain and delay time. Significant reduction in overall gain can occur when using resistor values below 47 kΩ for single channel product.
11. The Applications Information section of this data sheet references the HCPL-47XX part family, but applies equally to the HCPL-070A and HCPL-073A parts.

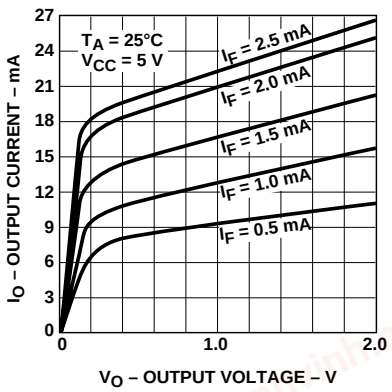

Figure 2. DC Transfer Characteristics (I_F = 0.5 mA to 2.5 mA).

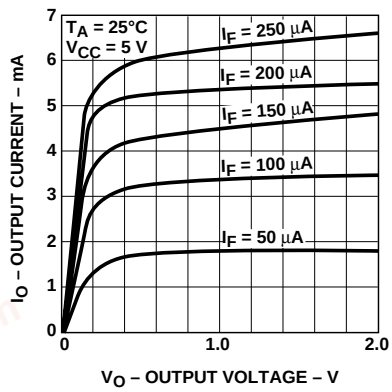

Figure 3. DC Transfer Characteristics (I_F = 50 μA to 250 μA).

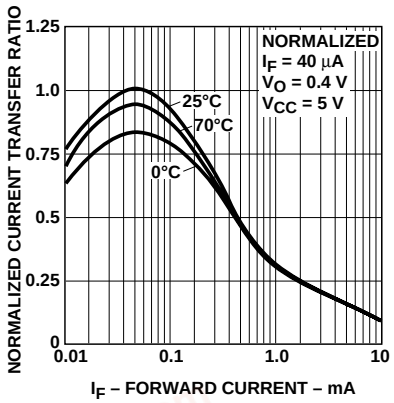

Figure 4. Current Transfer Ratio vs. Forward Current.

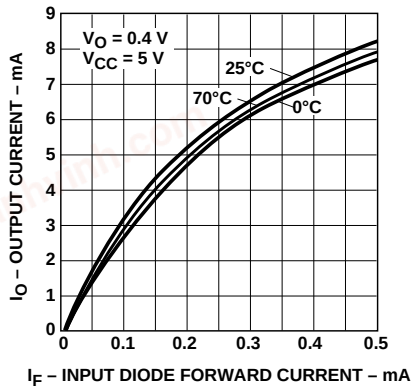

Figure 5. Output Current vs. Input Diode Forward Current.

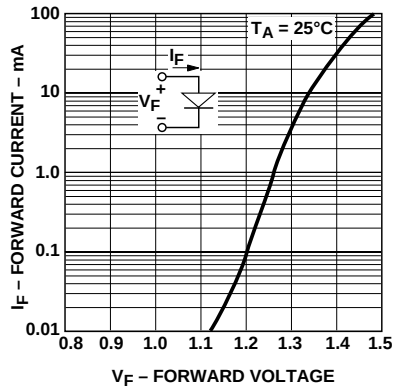

Figure 6. Input Diode Forward Current vs. Forward Voltage.

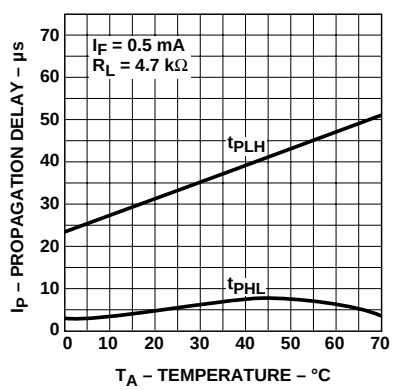

Figure 7. Propagation Delay vs. Temperature.

chanhvinh.com

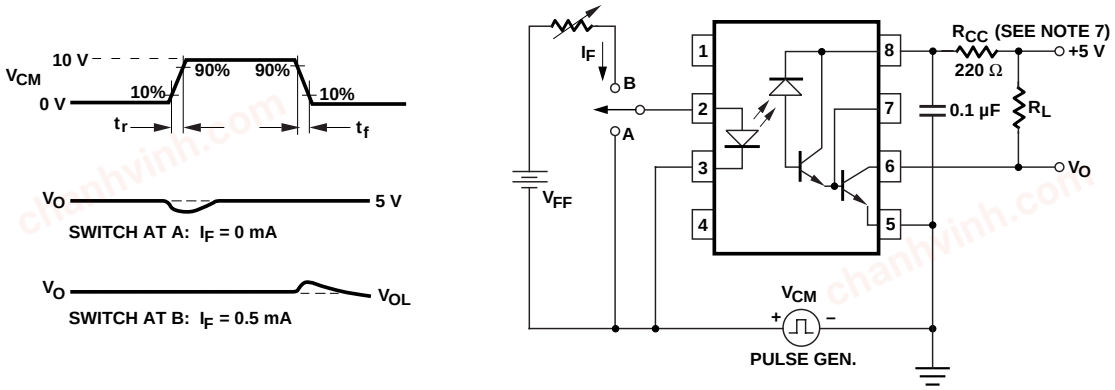

Figure 8. Test Circuit for Transient Immunity and Typical Waveforms.

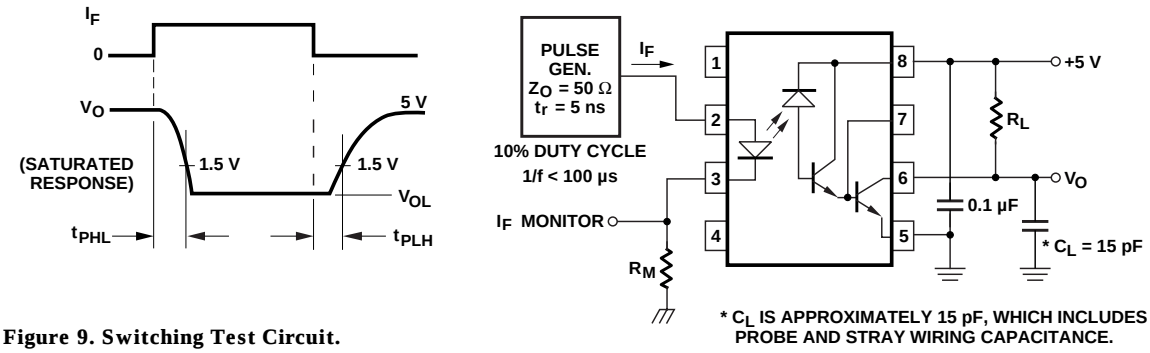

Figure 9. Switching Test Circuit.

Applications Information

Low-Power Operation

Current Gain

There are many applications where low-power isolation is needed and can be provided by the single-channel HCPL-4701, or the dual-channel HCPL-4731 low-power optocouplers. Either or both of these two devices are referred to in this text as HCPL-47XX product(s). These optocouplers are Avago's lowest input current, low-power optocouplers. Low-power isolation can be defined as less than a milliwatt of input power needed to operate the LED of an optocoupler (generally less than 500 µA). This level of input forward current conducting through the LED can control a worst-case total output (I_{ol}) and power supply current (I_{ccl}) of two and a half milliamperes. Typically, the HCPL-47XX can control a total output and supply current of 15 mA. The output current, I_O is determined by the LED forward current multiplied by the current gain of the optocoupler, $I_O = I_F$ (CTR)/100%. In particular with the HCPL-47XX optocouplers, the LED can be driven with a very small I_F of 40 µA to control a maximum I_O of 320 µA with a worst case design Current Transfer Ratio (CTR) of 800%. Typically, the CTR and the corresponding I_{ol}, are 4 times larger. For low-power operation, Table 1 lists the typical power dissipations that occur for both the 3.3 Vdc and 5 Vdc HCPL-47XX optocoupler applications. These approximate power dissipation values are listed respectively for the LED, for the output V_{CC} and for the open-collector output transistor. Those values are summed together for a comparison of total power dissipation consumed in either the 3.3 Vdc or 5 Vdc applications.

chanhvinh.com

Table 1. Typical HCPL-4701 Power Dissipation for 3 V and 5 V Applications

Power Dissipation (μW)	V_{CC} = 3.3 Vdc		V_{CC} = 5 Vdc	
	I_F = 40 μA	I_F = 500 μA	I_F = 40 μA	I_F = 500 μA
P_{LED}	50	625	50	625
P_{Vcc}	65	330	100	500
P_{O-C}[1]	20	10	25	20
P_{TOTAL}[2]	135 μW	965 μW	175 μW	1,145 μW

Notes:
1. R_L of 11 kΩ open-collector (o-c) pull-up resistor was used for both 3.3 Vdc and 5 Vdc calculations.
2. For typical total interface circuit power consumption in 3.3 Vdc application, add to P_{TOTAL} approximately 80 μW for 40 μA (1,025 μW for 500 μA) LED current-limiting resistor, and 960 μW for the 11 kΩ pull-up resistor power dissipations. Similarly, for 5 Vdc applications, add to P_{TOTAL} approximately 150 μW for 40 μA (1,875 μW for 500 μA) LED current-limiting resistor and 2,230 μW for the 11 kΩ pull-up resistor power dissipations.

Propagation Delay

When the HCPL-47XX optocoupler is operated under very low input and output current conditions, the propagation delay times will lengthen. When lower input drive current level is used to switch the high-efficiency AlGaAs LED, the slower the charge and discharge time will be for the LED. Correspondingly, the propagation delay times will become longer as a result. In addition, the split-Darlington (open-collector) output amplifier needs a larger, pull-up load resistance to ensure the output current is within a controllable range. Applications that are not sensitive to longer propagation delay times and that are easily served by this HCPL-47XX optocoupler, typically 65 μs or greater, are those of status monitoring of a telephone line, power line, battery condition of a portable unit, etc. For faster HCPL-47XX propagation delay times, approximately 30 μs, this optocoupler needs to operate at higher I_F (≥ 500 μA) and I_o (≥ 1 mA) levels.

Applications

Battery-Operated Equipment

Common applications for the HCPL-47XX optocoupler are within battery-operated, portable equipment, such as test or medical instruments, computer peripherals and accessories where energy conservation is required to maximize battery life. In these applications, the optocoupler would monitor the battery voltage and provide an isolated output to another electrical system to indicate battery status or the need to switch to a backup supply or begin a safe shutdown of the equipment via a communication port. In addition, the HCPL-47XX optocouplers are specified to operate with 3 Vdc CMOS logic family of devices to provide logic-signal isolation between similar or different logic circuit families.

Telephone Line Interfaces

Applications where the HCPL-47XX optocoupler would be best used are in telephone line interface circuitry for functions of ring detection, on-off hook detection, line polarity, line presence and supplied-power sensing. In particular, Integrated Services Digital Network (ISDN) applications, as illustrated in Figure 10, can severely restrict the input power that an optocoupler interface circuit can use (approximately 3 mW). Figure 10 shows three isolated signals that can be served by the small input LED current of the HCPL-47XX dual- and single-channel optocouplers. Very low, total power dissipation occurs with these series of devices.

Switched-Mode Power Supplies

Within Switched-Mode Power Supplies (SMPS) the less power consumed the better. Isolation for monitoring line power, regulation status, for use within a feedback path between primary and secondary circuits or to external circuits are common applications for optocouplers. Low-power HCPL-47XX optocoupler can help keep higher energy conversion efficiency for the SMPS. The block diagram of Figure 11 shows where low-power isolation can be used.

chanhvinh.com

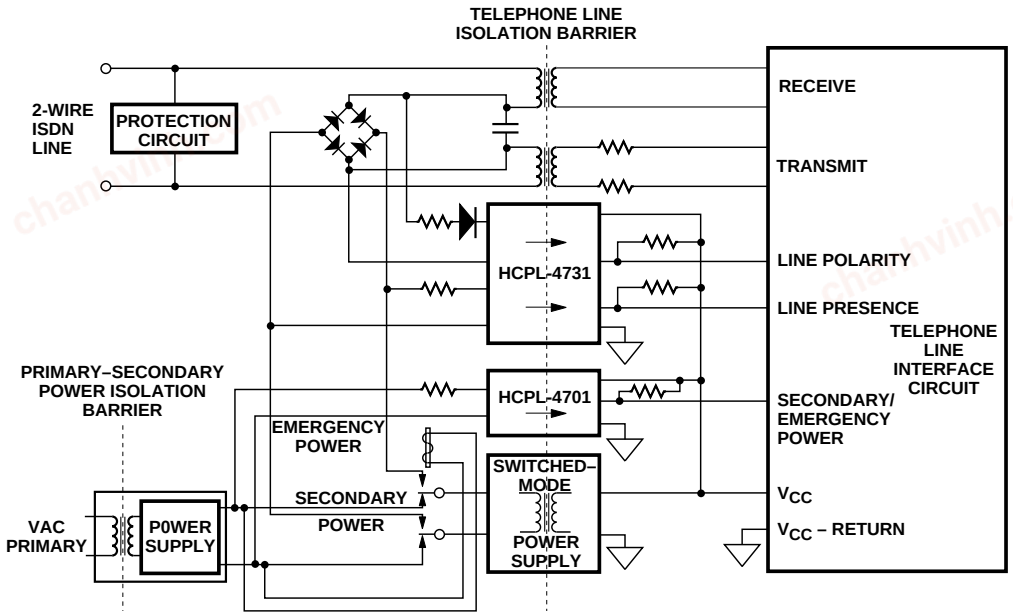

NOTE: THE CIRCUITS SHOWN IN THIS FIGURE REPRESENT POSSIBLE, FUNCTIONAL APPLICATION OF THE HCPL-47XX OPTOCOUPLER TO AN ISDN LINE INTERFACE. THIS CIRCUIT ARRANGEMENT DOES NOT GUARANTEE COMPLIANCE, CONFORMITY, OR ACCEPTANCE TO AN ISDN, OR OTHER TELECOMMUNICATION STANDARD, OR TO FCC OR TO OTHER GOVERNMENTAL REGULATORY AGENCY REQUIREMENTS. THESE CIRCUITS ARE RECOMMENDATIONS THAT MAY MEET THE NEEDS OF THESE APPLICATIONS. Agilent DOES NOT IMPLY, REPRESENT, NOR GUARANTEE THAT THESE CIRCUIT ARRANGEMENTS ARE FREE FROM PATENT INFRINGEMENT.

Figure 10. HCPL-47XX Isolated Monitoring Circuits for 2-Wire ISDN Telephone Line.

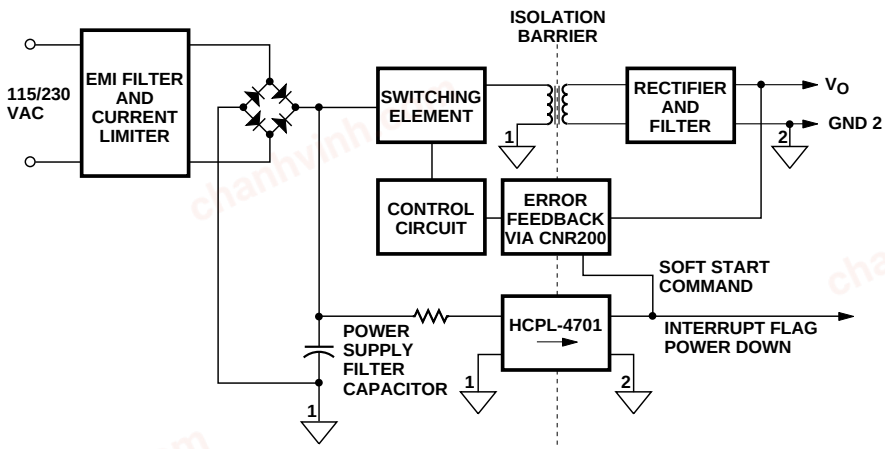

Figure 11. Typical Optical Isolation Used for Power-Loss Indication and Regulation Signal Feedback.

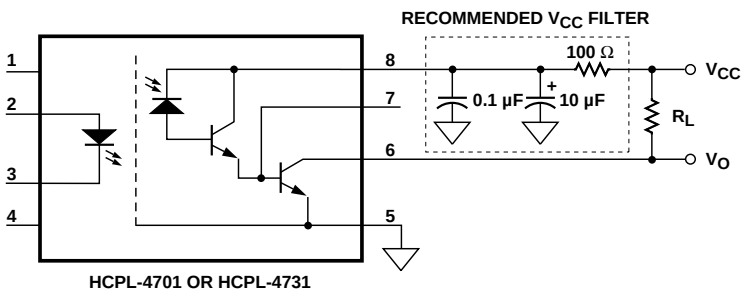

Figure 12. Recommended Power Supply Filter for HCPL-47XX Optocouplers.

chanhvinh.com

Data Communication and Input/Output Interfaces

In data communication, the HCPL-47XX can be used as a line receiver on a RS-232-C line or this optocoupler can be part of a proprietary data link with low input current, multi-drop stations along the data path. Also, this low-power optocoupler can be used within equipment that monitors the presence of high-voltage. For example, a benefit of the low input LED current (40 µA) helps the input sections of a Programmable Logic Controller (PLC) monitor proximity and limit switches. The PLC I/O sections can benefit from low input current optocouplers because the total input power dissipation when monitoring the high voltage (120 Vac - 220 Vac) inputs is minimized at the I/O connections. This is especially important when many input channels are stacked together.

Circuit Design Issues

Power Supply Filtering

Since the HCPL-47XX is a high-gain, split-Darlington amplifier, any conducted electrical noise on the V_{CC} power supply to this optocoupler should be minimized. A recommended V_{CC} filter circuit is shown in Figure 12 to improve the power supply rejection (psr) of the optocoupler. The filter should be located near the combination of pin 8 and pin 5 to provide best filtering action. This filter will drastically limit any sudden rate of change of V_{CC} with time to a slower rate that cannot interfere with the optocoupler.

Common-Mode Rejection & LED Driver Circuits

With the combination of a high-efficiency AlGaAs LED and a high-gain amplifier in the HCPL-47XX optocoupler, a few circuit techniques can enhance the common-mode rejection (CMR) of this optocoupler. First, use good high-frequency circuit layout practices to minimize coupling of common-mode signals between input and output circuits. Keep input traces away from output traces to minimize capacitive coupling of interference between input and output sections. If possible, parallel, or shunt switch the LED current as shown in Figure 13, rather than series switch the LED current as illustrated in Figure 15. Not only will CMR be enhanced with these circuits (Figures 13 and 14), but the switching speed of the opto-coupler will be improved as well. This is because in the parallel switched case the LED current is current-steered into or away from the LED, rather than being fully turned off as in the series switched case. Figure 13 illustrates this type of circuit. The Schottky diode helps quickly to discharge and pre-bias the LED in the off state. If a common-mode voltage across the optocoupler suddenly attempts to inject a current into the off LED anode, the Schottky diode would divert the interfering current to ground. The combination of the Schottky diode forward voltage and the Vol saturation voltage of the driver output stage (on-condition) will keep the LED voltage at or below 0.8 V. This will prevent the LED (off-condition) from conducting any significant forward current that might cause the HCPL-47XX to turn on. Also, if the driver stage is an active totem-pole output, the Schottky diode allows the active output pull-up section to disconnect from the LED and pull high.

As shown in Figure 14, most active output driver integrated circuits can source directly the forward current needed to operate the LED of the HCPL-47XX optocoupler. The advantage of using the silicon diode in this circuit is to conduct charge out of the LED quickly when the LED is turned off. Upon turn-on of the LED, the silicon diode capacitance will provide a rapid charging path (peaking current) for the LED. In addition, this silicon diode prevents common-mode current from entering the LED anode when the driver IC is on and no operating LED current exists.

In general, series switching the low input current of the HCPL-47XX LED is not recommended. This is particularly valid when in a high common-mode interference environment. However, if series switching of the LED current must be done, use an additional pull-up resistor from the cathode of the LED to the input V_{CC} as shown in Figure 15. This helps minimize any differential-mode current from conducting in the LED while the LED is off, due to a common-mode signal occurring on the input V_{CC} (anode) of the LED. The common-mode signal coupling to the anode and cathode could be slightly different. This could potentially create a LED current to flow that would rival the normal, low input current needed to operate the optocoupler. This additional parallel resistor can help shunt any leakage current around the LED should the drive circuit, in the off state, have any significant leakage current on the order of 40 µA. With the use of this parallel resistor, the total drive current conducted when the LED is on is the sum of the parallel resistor and LED currents. In the series circuit of Figure 15 with the LED off, if a common-mode voltage were to couple to the LED cathode, there can be enough imbalance of common-mode voltage across the LED to cause a LED current to flow and, inadvertently, turn on the optocoupler. This series, switching circuit has no protection against a negative-transition, input common-mode signal.

chanhvinh.com

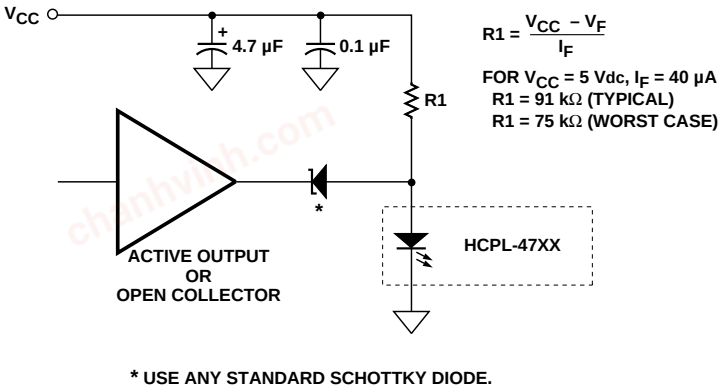

Figure 13. Recommended Parallel LED Driver Circuit for HCPL-4701/-4731.

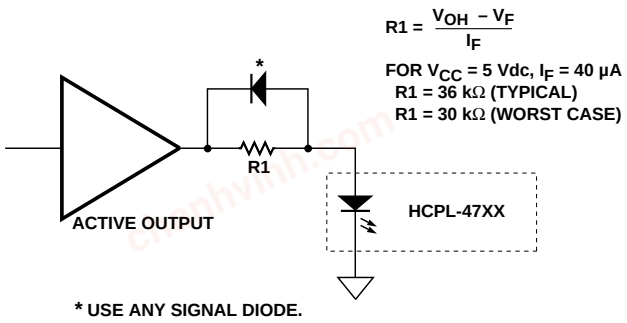

Figure 14. Recommended Alternative LED Driver Circuit for HCPL-4701/-4731 .

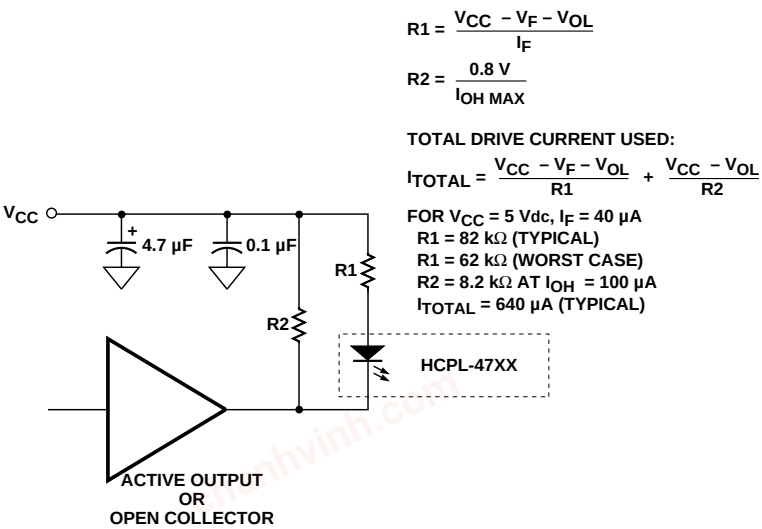

Figure 15. Series LED Driver Circuit for HCPL-4701/-4731.

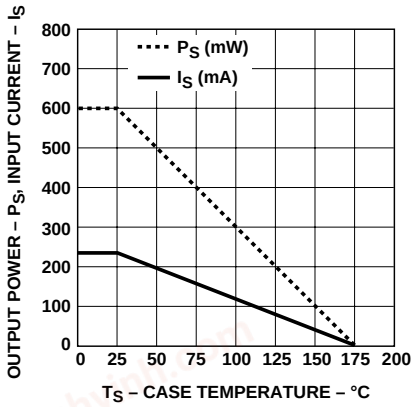

Figure 16. Thermal Derating Curve, Dependence of Safety Limiting Value with Case Temperature per VDE 0884.

For product information and a complete list of distributors, please go to our website: **www.avagotech.com**

Avago, Avago Technologies, and the A logo are trademarks of Avago Technologies Limited in the United States and other countries.
Data subject to change. Copyright © 2007 Avago Technologies Limited. All rights reserved. Obsoletes 5989-2106EN
AV01-0547EN June 24, 2007