chanhvinh.com

Agilent HCPL-250L/ 050L/253L/053L LVTTL/LVCMOS Compatible 3.3 V Optocouplers (1 Mb/s)

Data Sheet

Description

These diode-transistor optocouplers use an insulating layer between a LED and an integrated photodetector to provide electrical insulation between input and output. Separate connections for the photodiode bias and output-transistor collector increase the speed up to a hundred times that of a conventional phototransistor coupler by reducing the base-collector capacitance.

These optocouplers are available in an 8-pin DIP and in an industry standard SO-8 package. The following is a cross reference table listing the 8-pin DIP part number and the electrically equivalent SO-8 part number.

The SO-8 does not require "through holes" in a PCB. This package occupies approximately one-third the footprint area of the

Features

- Low power consumption
- High speed: 1 Mb/s
- LVTTL/LVCMOS compatible
- Available in 8-pin DIP, SO-8
- Open collector output
- Guaranteed performance from temperature: 0°C to +70°C
- Safety approval, UL, CSA, VDE 0884

Applications

- High voltage insulation
- Video signal isolation
- Power translator isolation in motor drives
- Line receivers
- Feedback element in switched mode power supplies
- High speed logic ground isolation – LVTTL/LVCMOS
- Replaces pulse transformers
- Replaces slow phototransistor isolators
- Analog signal ground isolation

Functional Diagram

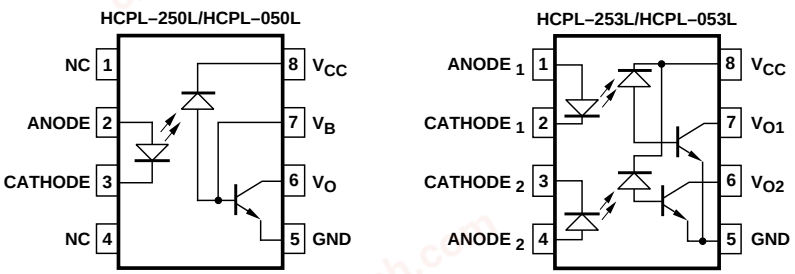

TRUTH TABLE (POSITIVE LOGIC)

LED	V_O
ON	LOW
OFF	HIGH

A 0.1 µF bypass capacitor must be connected between pins 5 and 8.

CAUTION: It is advised that normal static precautions be taken in handling and assembly of this component to prevent damage and/or degradation which may be induced by ESD.

chanhvinh.com

standard dual-in-line package. The lead profile is designed to be compatible with standard surface mount processes.

These optocouplers can be used in LVTTL/LVCMOS or wide bandwidth analog applications.

The common mode transient immunity of 1000 V/µs minimum to typical at V_{CM} = 10 V guaranteed for these optocouplers.

8-Pin DIP	SO-8 Package
HCPL-250L	HCPL-050L
HCPL-253L	HCPL-053L

Ordering Information

Specify Part Number followed by Option Number (if desired).

Example:

HCPL-250L #XXX

- 060 = VDE 0884 V_{IORM}
- 500 = Tape and Reel Packaging Option

Option data sheets available. Contact Agilent sales representative or authorized distributor for information.

Schematic

HCPL-250L/HCPL-050L

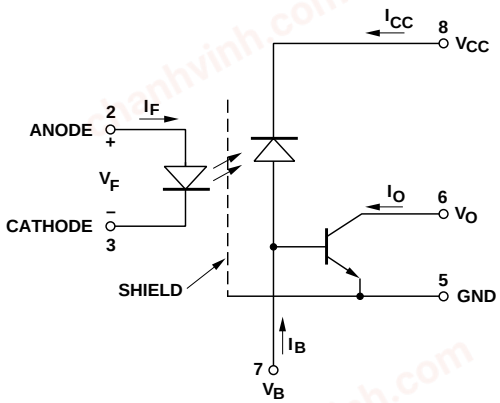

HCPL-253L/HCPL-053L

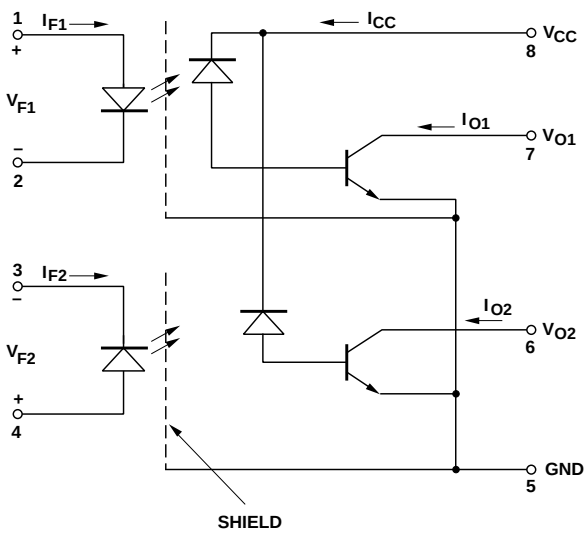

chanhvinh.com

Package Outline Drawings

8-Pin DIP Package

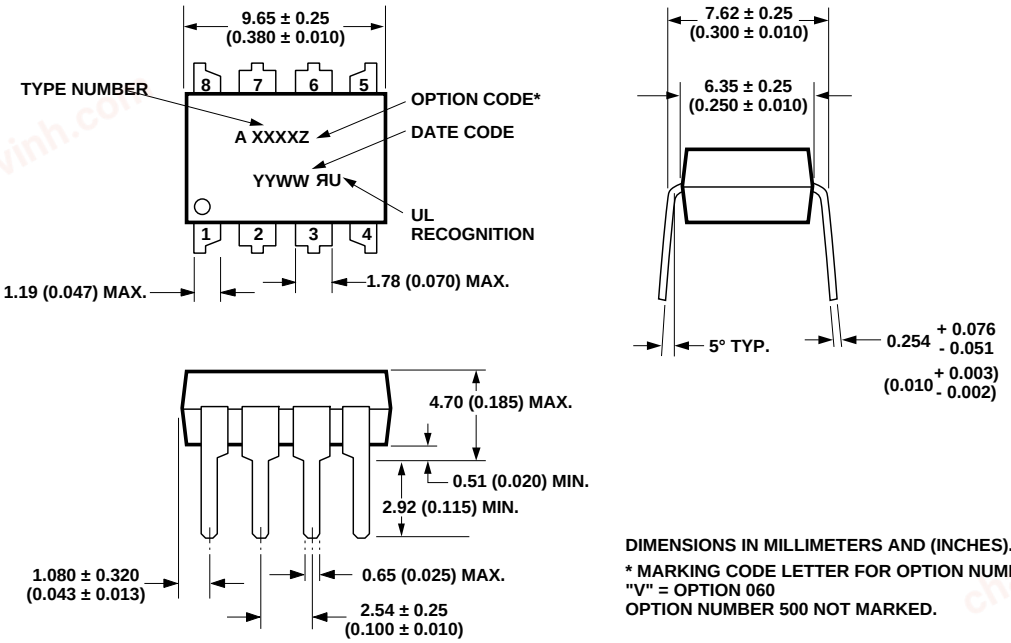

DIMENSIONS IN MILLIMETERS AND (INCHES).

* MARKING CODE LETTER FOR OPTION NUMBERS.
"V" = OPTION 060
OPTION NUMBER 500 NOT MARKED.

chanhvinh.com

Small Outline SO-8 Package

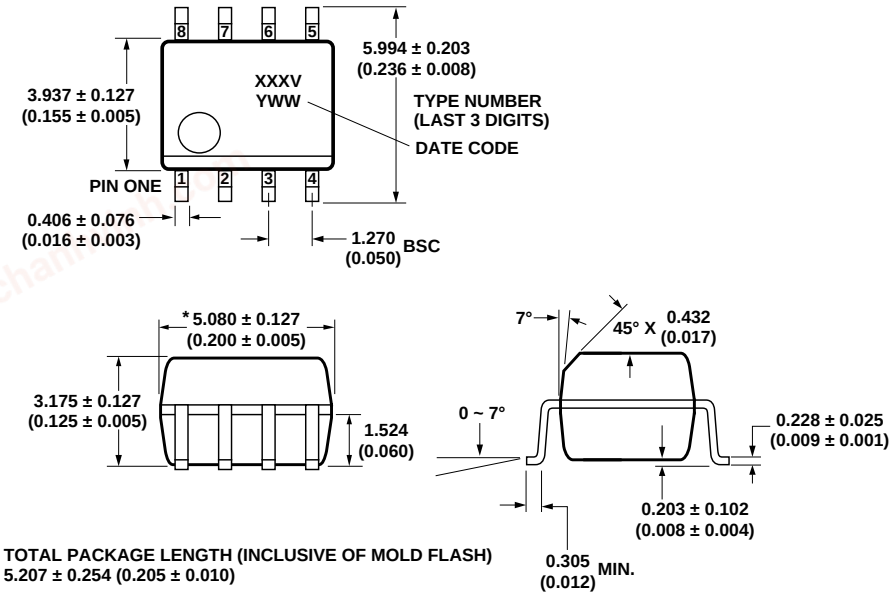

* TOTAL PACKAGE LENGTH (INCLUSIVE OF MOLD FLASH)
5.207 ± 0.254 (0.205 ± 0.010)

DIMENSIONS IN MILLIMETERS (INCHES).
LEAD COPLANARITY = 0.10 mm (0.004 INCHES) MAX.

OPTION NUMBER 500 NOT MARKED.

Solder Reflow Temperature Profile (Surface Mount Option Parts)

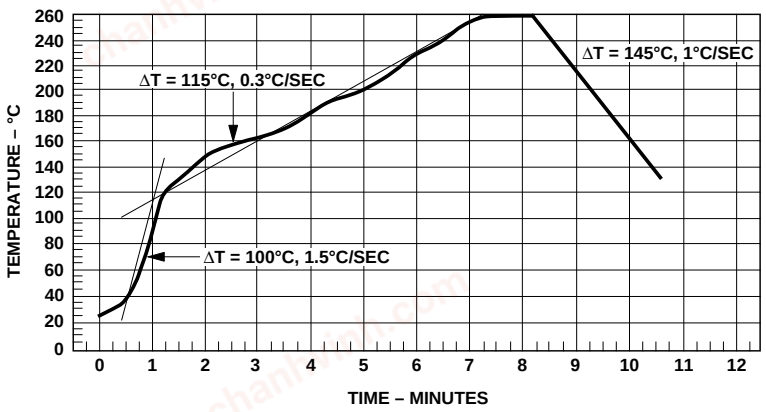

(NOTE: USE OF NON-CHLORINE ACTIVATED FLUXES IS RECOMMENDED.)

Regulatory Information

The devices contained in this data sheet have been approved by the following organizations:

UL

Approval under UL 1577, Component Recognition Program, File E55361.

CSA

Approval under CSA Component Acceptance Notice #5, File CA 88324.

VDE

Approval according to VDE 0884/06.92.

chanhvinh.com

Insulation and Safety Related Specifications

Parameter	Symbol	8-Pin DIP (300 Mil) Value	SO-8 Value	Units	Conditions
Minimum External Air Gap (External Clearance)	L (101)	7.1	4.9	mm	Measured from input terminals to output terminals, shortest distance through air.
Minimum External Tracking (External Creepage)	L (102)	7.4	4.8	mm	Measured from input terminals to output terminals, shortest distance path along body.
Minimum Internal Plastic Gap (Internal Clearance)		0.08	0.08	mm	Through insulation distance, conductor to conductor, usually the direct distance between the photoemitter and photodetector inside the optocoupler cavity.
Tracking Resistance (Comparative Tracking Index)	CTI	200	200	Volts	DIN IEC 112/VDE 0303 Part 1
Isolation Group		IIIa	IIIa		Material Group (DIN VDE 0110, 1/89, Table 1)

VDE 0884 Insulation Related Characteristics

Description	Symbol	PDIP Option 060	SO-8 Option 60	Units
Installation classification per DIN VDE 0110/1.89, Table 1				
for rated mains voltage ≤ 150 V rms			I-IV	
for rated mains voltage ≤ 300 V rms		I-IV	I-III	
for rated mains voltage ≤ 600 V rms		I-III	I-II	
Climatic Classification		55/85/21	55/85/21	
Pollution Degree (DIN VDE 0110/1.89)		2	2	
Maximum Working Insulation Voltage	V_{IORM}	630	566	V_{peak}
Input to Output Test Voltage, Method b* V_{IORM} x 1.875 = V_{PR}, 100% Production Test with t_m = 1 sec, Partial Discharge < 5 pC	V_{PR}	1181	1063	V_{peak}
Input to Output Test Voltage, Method a* V_{IORM} x 1.5 = V_{PR}, Type and Sample Test, t_m = 60 sec, Partial Discharge < 5 pC	V_{PR}	945	849	V_{peak}
Highest Allowable Overvoltage* (Transient Overvoltage, t_{ini} = 10 sec)	V_{IOTM}	6000	4000	V_{peak}
Safety Limiting Values (Maximum values allowed in the event of a failure, also see Figure 16, Thermal Derating curve.)				
Case Temperature	T_S	175	150	°C
Input Current	$I_{S,INPUT}$	230	150	mA
Output Power	$P_{S,OUTPUT}$	600	600	mW
Insulation Resistance at T_S, V_{IO} = 500 V	R_S	$\geq 10^9$	$\geq 10^9$	Ω

*Refer to the front of the optocoupler section of the current catalog, under Product Safety Regulations section (VDE 0884), for a detailed description.
Note: Isolation characteristics are guaranteed only within the safety maximum ratings which must be ensured by protective circuits in application.

chanhvinh.com

Absolute Maximum Ratings

Parameter	Symbol	Min.	Max.	Units	Note
Storage Temperature	T_S	–55	125	°C	
Operating Temperature	T_A	–55	100	°C	
		–55	85		
Average Forward Input Current	$I_{F(AVG)}$		25	mA	1
Peak Forward Input Current (50% duty cycle, 1 ms pulse width)	$I_{F(PEAK)}$		50	mA	2
(50% duty cycle, 1 ms pulse width)			40		
Peak Transient Input Current (≤ 1 µs pulse width, 300 pps)	$I_{F(TRANS)}$		1	A	
			0.1		
Reverse LED Input Voltage (Pin 3-2)	V_R		5	V	
Input Power Dissipation	P_{IN}		45	mW	3
			4		
Average Output Current (Pin 6)	$I_{O(AVG)}$		8	mA	
Peak Output Current	$I_{O(PEAK)}$		16	mA	
Emitter-Base Reverse Voltage	V_{EBR}		5	V	
Supply Voltage (Pin 8-5)	V_{CC}	–0.5	7	V	
Output Voltage (Pin 6-5)	V_O	–0.5	7	V	
Base Current	I_B		5	mA	
Output Power Dissipation	P_O		100	mW	4
Lead Solder Temperature (Through Hole Parts Only)					
1.6 mm below seating plane, 10 sec.	T_{LS}		260	°C	
up to seating plane, 10 seconds			260	°C	
Reflow Temperature Profile	T_{RP}	See Package Outline Drawings section			

Recommended Operating Conditions

Parameter	Symbol	Min.	Max.	Units
Power Supply Voltage	V_{CC}	2.7	3.3	V
Forward Input Current	$I_{F(ON)}$	16	20	mA
Forward Input Voltage	$V_{F(OFF)}$	0	0.8	V
Operating Temperature	T_A	0	85	°C

chanhvinh.com

Electrical Specifications (DC)

Over Recommended Temperature (T_A = 0°C to +70°C), V_{CC} = 3.3 V, I_F = 16 mA, unless otherwise specified. See Note 13.

Parameter	Sym.	Device	Min.	Typ.	Max.	Units	Test Conditions	Fig.	Note
Current Transfer Ratio	CTR		15	20	50	%	T_A = 25°C V_O = 0.4 V, I_F = 16 mA, V_{CC} = 3.3 V	2	5, 11
Logic Low Output Voltage	V_{OL}			0.05	0.3	V	T_A = 25°C I_O = 3.0 mA, I_F = 16 mA, V_{CC} = 3.3 V		
Logic High Output Current	I_{OH}			0.003	1	µA	T_A = 25°C V_O = V_{CC} = 3.3 V, I_F = 0 mA	3	
Logic Low Supply Current	I_{CCL}	 Dual		43.0	100 300	µA	I_F = 16 mA, V_O = Open, V_{CC} = 3.3 V		13
Logic High Supply Current	I_{CCH}	 Dual		0.005	0.3 10	µA	T_A = 25°C I_F = 0 mA, V_O = Open, V_{CC} = 3.3 V		13
Input Forward Voltage	V_F			1.52	1.7	V	T_A = 25°C I_F = 16 mA	1	
Input Reverse Breakdown Voltage	BV_R		5			V	I_R = 10 µA		
Input Capacitance	C_{IN}			60		pF	f = 1 MHz, V_F = 0 V		

Switching Specifications (AC)

Over Recommended Temperature (T_A = 0°C to +70°C), V_{CC} = 3.3 V, I_F = 16 mA unless otherwise specified.
All typicals at V_{CC} = 3.3 V, T_A = 25°C.

Parameter	Sym.	Device	Min.	Typ.*	Max.	Units	Test Conditions	Fig.	Note
Propagation Delay Time to Logic Low at Output	t_{PHL}			0.35	1	µs	R_L = 1.9 kΩ	5	8, 9
Propagation Delay Time to Logic High at Output	t_{PLH}			0.65	1	µs	R_L = 1.9 kΩ	5	8, 9
Common Mode Transient Immunity at Logic High Level Output	$\|CM_H\|$			1		kV/µs	R_L = 4.1 kΩ R_L = 1.9 kΩ I_F = 0 mA, T_A = 25°C, V_{CM} = 10 V_{p-p}, C_L = 15 pF	6	7, 8, 9
Common Mode Transient Immunity at Logic Low Level Output	$\|CM_L\|$			1		kV/µs	R_L = 4.1 kΩ R_L = 1.9 kΩ I_F = 16 mA, T_A = 25°C, V_{CM} = 10 V_{p-p}, C_L = 15 pF	6	7, 8, 9

*All typicals at T_A = 25°C

chanhvinh.com

Package Characteristics

Over Recommended Temperature (T_A = 0°C to 70°C) unless otherwise specified.

Parameter	Sym.	Device	Min.	Typ.*	Max.	Units	Test Conditions	Fig.	Note
Input-Output Momentary Withstand Voltage**	V_{ISO}	8-Pin DIP SO-8	2500			V rms	RH < 50%, t = 1 min., T_A = 25°C		6, 14
	I_{I-O}	8-Pin DIP			1	μA	45% RH, t = 5 s, V_{I-O} = 3 kVdc, T_A = 25°C		6, 16
Input-Output Resistance	R_{I-O}	8-Pin DIP SO-8		10^{12}		Ω	V_{I-O} = 500 Vdc		6
Input-Output Capacitance	C_{I-O}	8-Pin DIP SO-8		0.6		pF	f = 1 MHz		6

*All typicals at T_A = 25°C.

**The Input-Output Momentary Withstand Voltage is a dielectric voltage rating that should not be interpreted as an input-output continuous voltage rating. For the continuous voltage rating refer to the VDE 0884 Insulation Related Characteristics Table (if applicable), your equipment level safety specification or Agilent Application Note 1074 entitled "Optocoupler Input-Output Endurance Voltage," publication number 5963-2203E.

Notes:

1. Derate linearly above 70°C free-air temperature at a rate of 0.8 mA/°C (8-Pin DIP).
   Derate linearly above 85°C free-air temperature at a rate of 0.5 mA/°C (SO-8).
2. Derate linearly above 70°C free-air temperature at a rate of 1.6 mA/°C (8-Pin DIP).
   Derate linearly above 85°C free-air temperature at a rate of 1.0 mA/°C (SO-8).
3. Derate linearly above 70°C free-air temperature at a rate of 0.9 mW/°C (8-Pin DIP).
   Derate linearly above 85°C free-air temperature at a rate of 1.1 mW/°C (SO-8).
4. Derate linearly above 70°C free-air temperature at a rate of 2.0 mW/°C (8-Pin DIP).
   Derate linearly above 85°C free-air temperature at a rate of 2.3 mW/°C (SO-8).
5. CURRENT TRANSFER RATIO in percent is defined as the ratio of output collector current, I_O, to the forward LED input current, I_F, times 100.
6. Device considered a two-terminal device: Pins 1, 2, 3, and 4 shorted together and Pins 5, 6, 7, and 8 shorted together.
7. Common mode transient immunity in a Logic High level is the maximum tolerable (positive) dV_{CM}/dt on the leading edge of the common mode pulse signal, V_{CM}, to assure that the output will remain in a Logic High state (i.e., V_O > 2.0 V). Common mode transient immunity in a Logic Low level is the maximum tolerable (negative) dV_{CM}/dt on the trailing edge of the common mode pulse signal, V_{CM}, to assure that the output will remain in a Logic Low state (i.e., V_O < 0.8 V).
8. The 1.9 kΩ load represents 1 TTL unit load of 1.6 mA and the 5.6 mA kΩ pull-up resistor.
9. The 4.1 kΩ load represents 1 LSTTL unit load of 0.36 mA and 6.1 kΩ pull-up resistor.
10. The frequency at which the AC output voltage is 3 dB below its mid-frequency value.
11. The JEDEC registration for the 6N136 specifies a minimum CTR of 15%. Agilent guarantees a minimum CTR of 15%.
12. See Option 020 data sheet for more information.
13. Use of a 0.1 μf bypass capacitor connected between pins 5 and 8 is recommended.
14. In accordance with UL 1577, each optocoupler is proof tested by applying an insulation test voltage ≥ 3000 V rms for 1 second (leakage detection current limit, $I_{I-O} \leq 5$ μA). This test is performed before the 100% Production test shown in the VDE 0884 Insulation Related Characteristics Table, if applicable.
15. In accordance with UL 1577, each optocoupler is proof tested by applying an insulation test voltage ≥ 6000 V rms for 1 second (leakage detection current limit, $I_{I-O} \leq 5$ μA). This test is performed before the 100% Production test shown in the VDE 0884 Insulation Related Characteristics Table, if applicable.
16. This rating is equally validated by an equivalent AC proof test.

chanhvinh.com

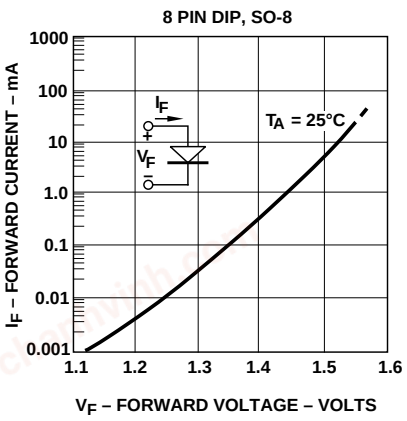

Figure 1. Input current vs. forward voltage.

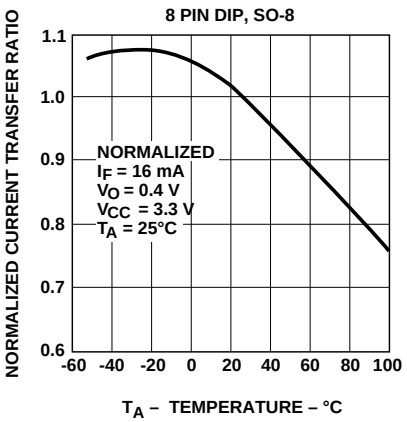

Figure 2. Current transfer ratio vs. temperature.

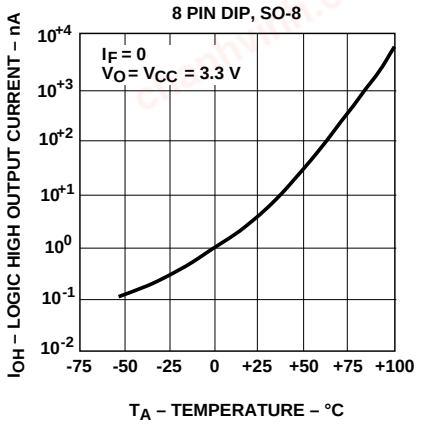

Figure 3. Logic high output current vs. temperature.

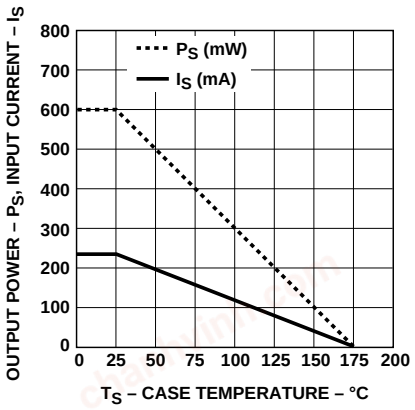

Figure 4. Thermal derating curve, dependence of safety limiting value with case temperature per VDE 0884.

chanhvinh.com

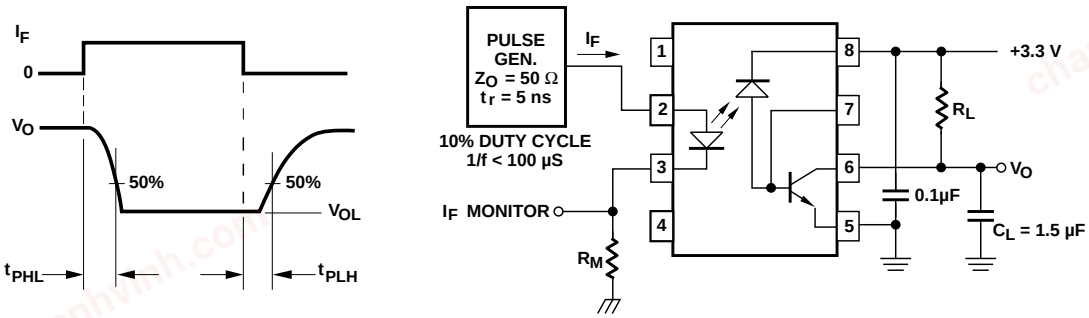

Figure 5. Switching test circuit.

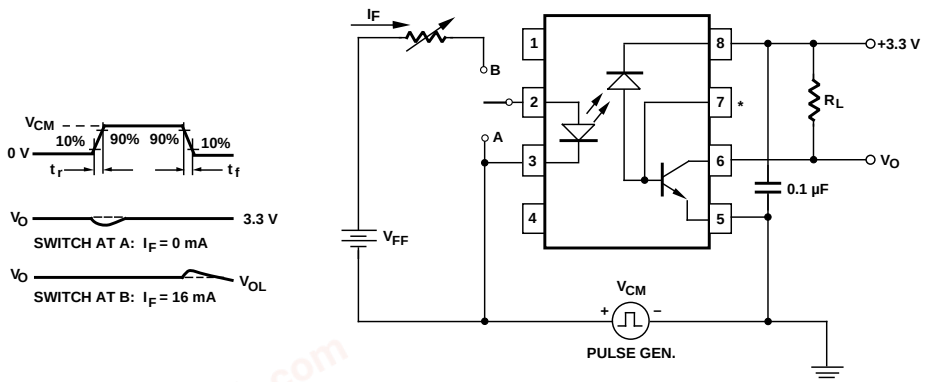

Figure 6. Test circuit for transient immunity and typical waveforms.

chanhvinh.com

www.agilent.com/semiconductors

For product information and a complete list of distributors, please go to our web site.

For technical assistance call:

Americas/Canada: +1 (800) 235-0312 or (408) 654-8675

Europe: +49 (0) 6441 92460

China: 10800 650 0017

Hong Kong: (+65) 6271 2451

India, Australia, New Zealand: (+65) 6271 2394

Japan: (+81 3) 3335-8152(Domestic/International), or 0120-61-1280(Domestic Only)

Korea: (+65) 6271 2194

Malaysia, Singapore: (+65) 6271 2054

Taiwan: (+65) 6271 2654

Data subject to change.

Copyright © 2002 Agilent Technologies, Inc.

Obsoletes 5988-6808EN

September 10, 2002

5988-7880EN

Agilent Technologies