chanhvinh.com

6N135/6, HCNW135/6, HCPL-2502/0500/0501

Single-Channel, High-Speed Optocouplers

Data Sheet

Description

These diode-transistor optocouplers use an insulating layer between a LED and an integrated photodetector to provide electrical insulation between input and output. Separate connections for the photodiode bias and output-transistor collector increase the speed up to a hundred times that of a conventional phototransistor coupler by reducing the base-collector capacitance.

These single channel optocoup-lers are available in 8-pin DIP, SO-8, and Widebody package configurations.

The 6N135, HCPL-0500, and HCNW135 are for use in TTL/CMOS, TTL/LSTTL or wide-bandwidth analog applications. Current transfer ratio (CTR) for these devices is 7% minimum at I_F = 16 mA.

The 6N136, HCPL-2502, HCPL-0501, and HCNW136 are designed for high-speed TTL/TTL applications. A standard 16-mA TTL sink current through the input LED will provide enough output current for 1 TTL load and a 5.6 kΩ pull-up resistor. CTR for these devices is 19% minimum at I_F=16 mA.

Features

- High speed: 1 Mb/s
- TTL compatible
- Available in 8-pin DIP, SO-8, widebody packages
- Open collector output
- Safety approval

  UL Recognized – 3750 V_{rms} for 1 minute (5000 V_{rms} for 1 minute for HCNW and Option 020 devices) per UL1577

  CSA Approved

  IEC/EN/DIN EN 60747-5-5 Approved

  — V_{IORM} = 567V peak for SO-8 devices
  — V_{IORM} = 630V peak for DIP 300 mil devices
  — V_{IORM} = 1414V peak for DIP 400 mil (widebody) devices
- Dual channel version available (253X/053X/0534)

Applications

- High voltage insulation
- Video signal isolation
- Line receivers
- Feedback element in switched mode power supplies
- High speed logic ground isolation
  — TTL/TTL, TTL/CMOS, TTL/LSTTL
- Replaces pulse transformers
- Replaces slow phototransistor isolators
- Analog signal ground isolation

CAUTION It is advised that normal static precautions be taken in handling and assembly of this component to prevent damage and/or degradation which may be induced by ESD.

chanhvinh.com

Functional Diagram

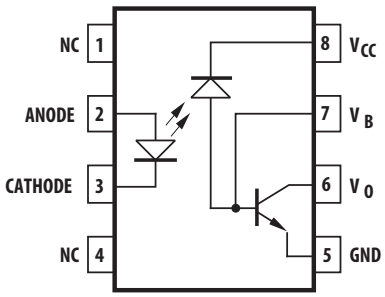

TRUTH TABLE (POSITIVE LOGIC)

LED	V_O
ON	LOW
OFF	HIGH

Truth Table (Positive Logic)

LED	V_O
ON	LOW
OFF	HIGH

A 0.1-µF bypass capacitor must be connected between pins 5 and 8.

Schematic

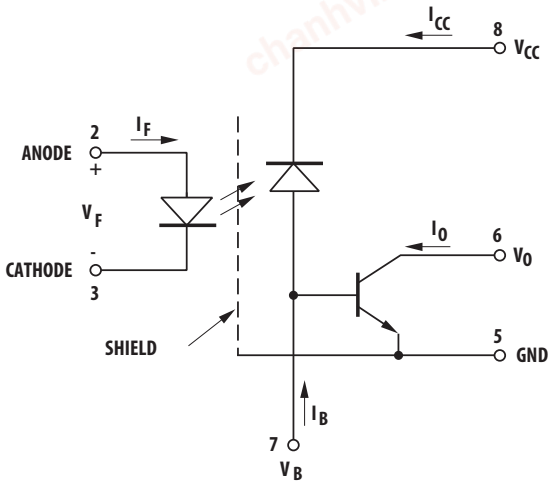

Selection Guide

Minimum CMR			8-Pin DIP (300 Mil)		Small Outline SO-8		Widebody (400 Mil)
dV/dT (V/µs)	V_{CM} (V)	Current Transfer Ratio (%)	Single Channel Package	Dual Channel Package[a]	Single Channel Package	Dual Channel Package[a]	Single Channel Package
1000	10	7	6N135	HCPL-2530	HCPL-0500	HCPL-0530	HCNW135
		19	6N136	HCPL-2531	HCPL-0501	HCPL-0531	HCNE136
		15	HCPL-2502				

a. Technical data for these products are on separate Broadcom publications.

chanhvinh.com

Ordering Information

6N135, 6N136, HCPL-2502, HCPL-0500, HCPL-0501 are UL Recognized with 3750 V_{rms} for 1 minute per UL1577.

HCNW135 and HCNW136 are UL Recognized with 5000 V_{rms} for 1 minute per UL1577. All these devices are approved under CSA Component Acceptance Notice #5, File CA 88324.

Part Number	Option		Package	Surface Mount	Gull Wing	Tape and Reel	UL 5000 V_{rms}/ 1 Minute Rating	IEC/EN/DIN EN 60747-5-5	Quantity
	RoHS Compliant	Non RoHS Compliant							
6N135	-000E	No option	300mil DIP-8						50 per tube
6N136	-300E	#300		X	X				50 per tube
HCPL-2502	-500E	#500		X	X	X			1000 per reel
	-020E	#020					X		50 per tube
	-320E	#320		X	X		X		50 per tube
	-520E	#520		X	X	X	X		1000 per reel
	-060E	#060						X	50 per tube
	-360E	#360		X	X			X	50 per tube
	-560E	#560		X	X	X		X	1000 per reel
HCPL-0500	-000E	No option	SO-8						100 per tube
HCPL-0501	-500E	#500		X	X	X			1500 per reel
	-060E	#060						X	100 per tube
	-560E	#560		X	X	X		X	1500 per reel
HCNW135	-000E	No option	400 mil Widebody DIP-8				X	X	42 per tube
HCNW136	-300E	#300		X	X		X	X	42 per tube
	-500E	#500		X	X	X	X	X	750 per reel

To order, choose a part number from the part number column and combine with the desired option from the option column to form an order entry.

Example 1:

HCPL-2502-560E to order product of 300 mil DIP Gull Wing Surface Mount package in Tape and Reel packaging with IEC/EN/DIN EN 60747-5-5 Safety Approval in RoHS compliant.

Example 2:

HCPL-2502 to order product of 300 mil DIP package in tube packaging and non RoHS compliant.

Option data sheets are available. Contact your Broadcom sales representative or authorized distributor for information.

NOTE The notation '#XXX' is used for existing products, while (new) products launched since 15th July 2001 and RoHS compliant option will use '-XXXE'.

chanhvinh.com

Package Outline Drawings

8-Pin DIP Package (6N135/6, HCPL-2502)

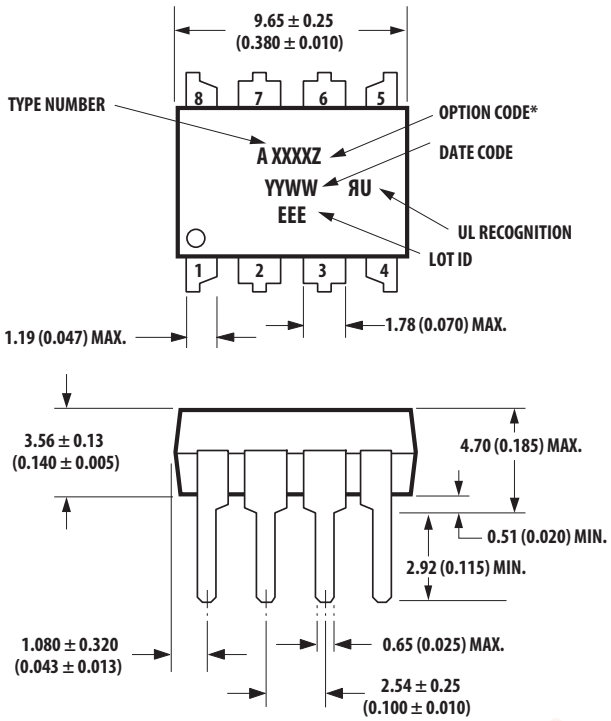

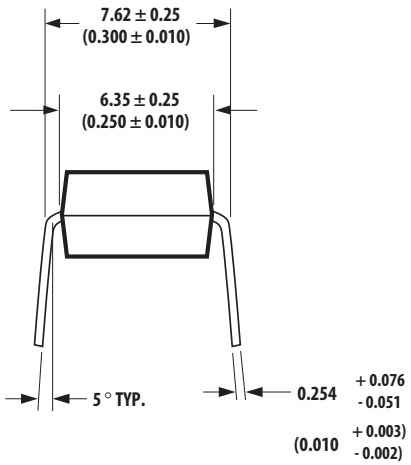

DIMENSIONS IN MILLIMETERS AND (INCHES).

*MARKING CODE LETTER FOR OPTION NUMBERS
"L" = OPTION 020
"V" = OPTION 060
OPTION NUMBERS 300 AND 500 NOT MARKED.

NOTE: FLOATING LEAD PROTRUSION IS 0.25 mm (10 mils) MAX.

chanhvinh.com

8-Pin DIP Package with Gull Wing Surface Mount Option 300 (6N135/6)

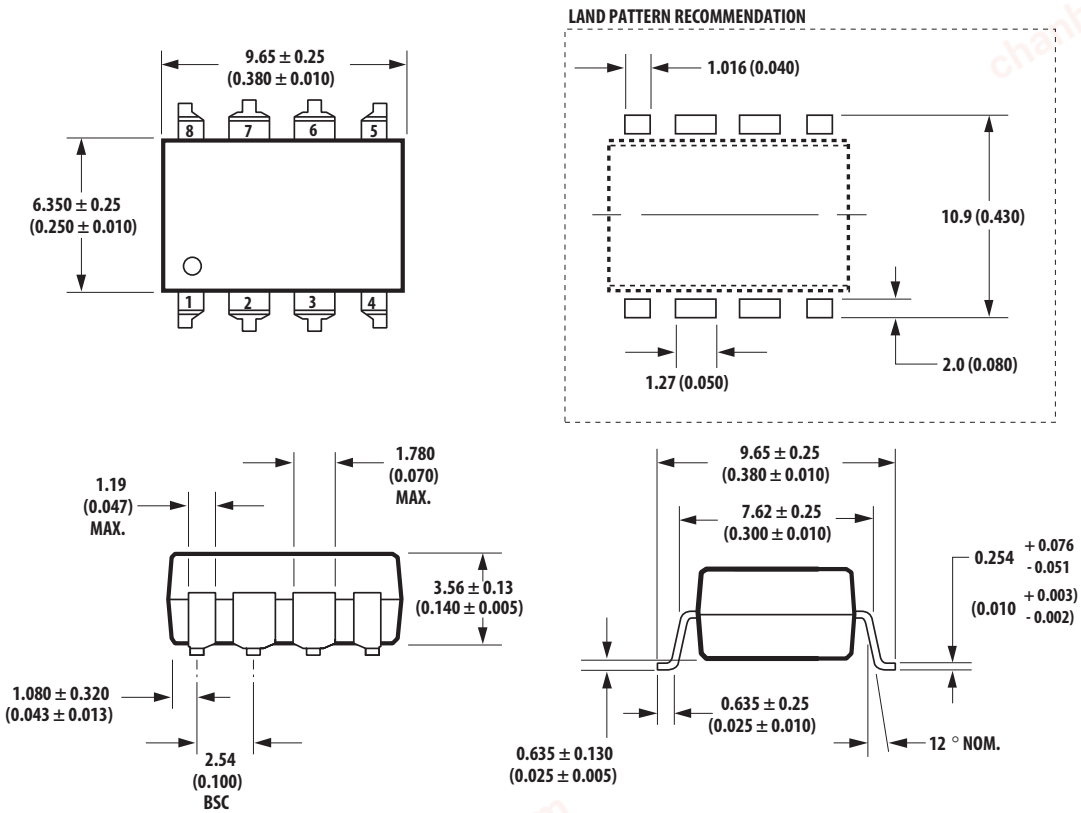

DIMENSIONS IN MILLIMETERS (INCHES).
LEAD COPLANARITY = 0.10 mm (0.004 INCHES).

NOTE: FLOATING LEAD PROTRUSION IS 0.25 mm (10 mils) MAX.

chanhvinh.com

Small Outline SO-8 Package (HCPL-0500/1)

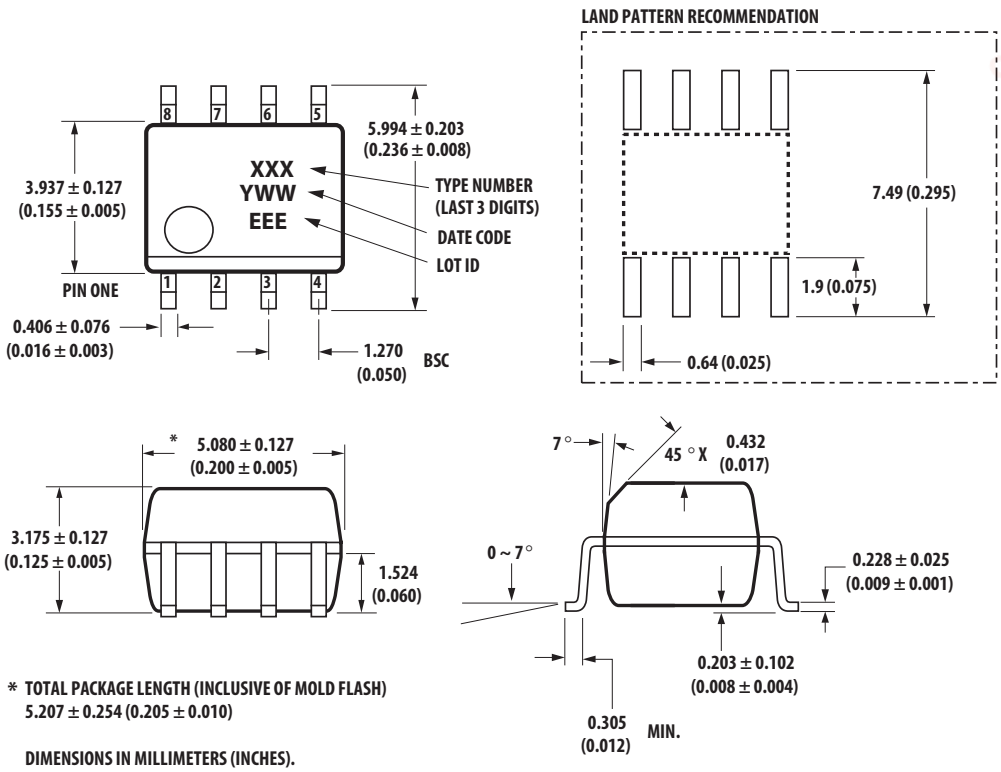

* TOTAL PACKAGE LENGTH (INCLUSIVE OF MOLD FLASH)
5.207 ± 0.254 (0.205 ± 0.010)

DIMENSIONS IN MILLIMETERS (INCHES).
LEAD COPLANARITY = 0.10 mm (0.004 INCHES) MAX.

chanhvinh.com

8-Pin Widebody DIP Package (HCNW135/6)

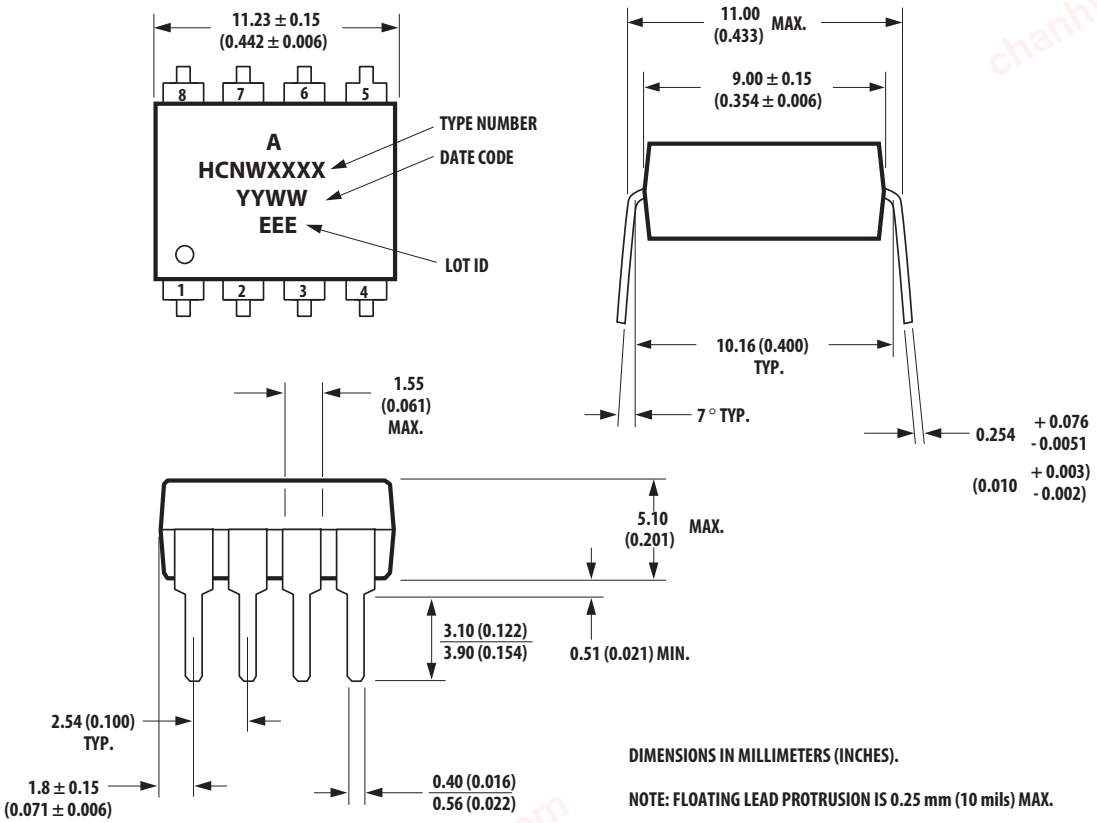

DIMENSIONS IN MILLIMETERS (INCHES).

NOTE: FLOATING LEAD PROTRUSION IS 0.25 mm (10 mils) MAX.

chanhvinh.com

8-Pin Widebody DIP Package with Gull Wing Surface Mount Option 300 (HCNW135/6)

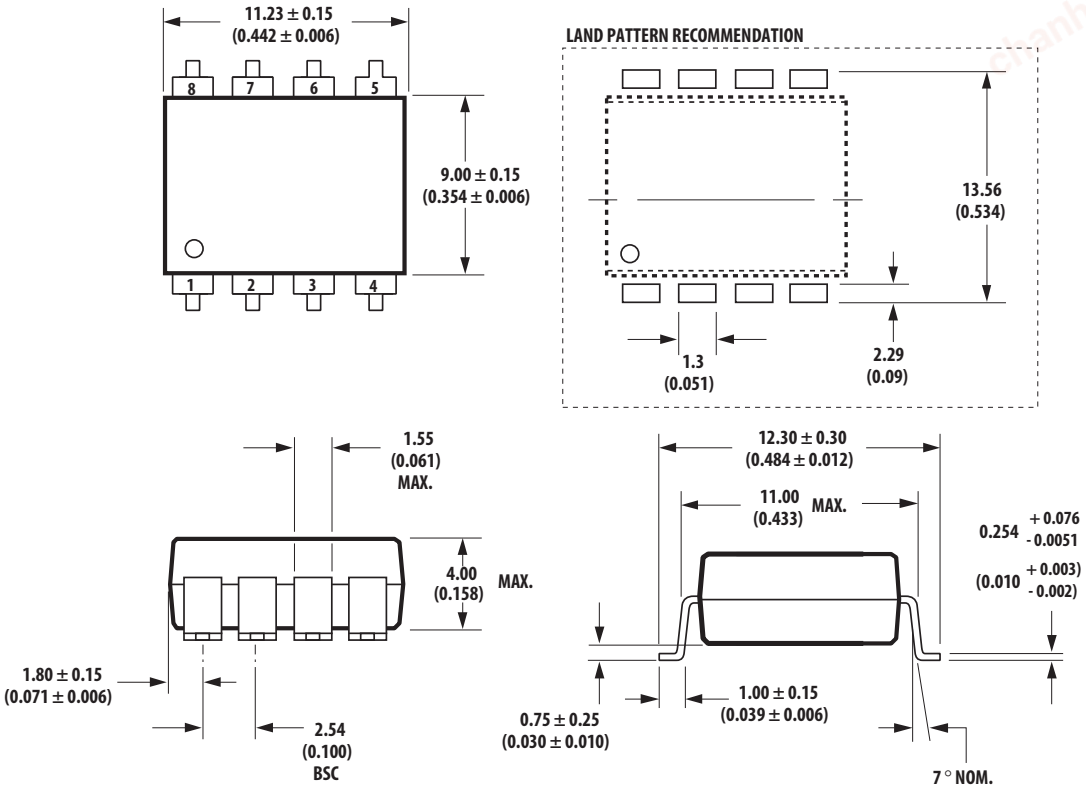

DIMENSIONS IN MILLIMETERS (INCHES).

LEAD COPLANARITY = 0.10 mm (0.004 INCHES).

NOTE: FLOATING LEAD PROTRUSION IS 0.25 mm (10 mils) MAX.

Solder Reflow Profile

Recommended reflow conditions are as per JEDEC Standard, J-STD-020 (latest revision). Non-halide flux should be used.

Regulatory Information

The devices contained in this data sheet have been approved by the following organizations:

UL	Approval under UL 1577, Component Recognition Program, File E55361.
CSA	Approval under CSA Component Acceptance Notice #5, File CA 88324.
IEC/EN/DIN EN 60747-5-5	(HCNW and Option 060/360/560 only)

chanhvinh.com

Insulation and Safety Related Specifications

Parameter	Symbol	8-Pin DIP (300 Mil) Value	SO-8 Value	Widebody (400 Mill) Value	Units	Conditions
Minimum External Air Gap (External Clearance)	L(101)	7.1	4.9	9.6	mm	Measured from input terminals to output terminals, shortest distance through air.
Minimum External Tracking (External Creepage)	L(102)	7.4	4.8	10.0	mm	Measured from input terminals to output terminals, shortest distance path along body..
Minimum Internal Plastic Gap (Internal Clearance)		0.08	0.08	1.0	mm	Through insulation distance conductor to conductor, usually the direct distance between the photoemitter and photodetector inside the optocoupler cavity.
Minimum Internal Tracking (Internal Creepage)		N/A	N/A	4.0	mm	Measured from input terminals to output terminals, along internal cavity.
Tracking Resistance (Comparative Tracking Index)	CTI	200	200	200	V	DIN IEC 112/VDE 0303 Part 1
Isolation Group		IIIa	IIIa	IIIa		Material Group (DIN VDE 0110, 1/89, Table 1)

Option 300 – Surface mount classification is Class A in accordance with CECC 00802.

chanhvinh.com

IEC/EN/DIN EN 60747-5-5 Insulation Characteristics[a] (Option 060 Only)

Description	Symbol	8-Pin DIP	SO-8	Units
Installation Classification per DIN VDE 0110/39, Table 1				
for rated mains voltage ≤ 150 V_{rms}		I – IV	I – IV	
for rated mains voltage ≤ 300 V_{rms}		I – IV	I – IV	
for rated mains voltage ≤ 600 V_{rms}		I – IV	I – III	
Climatic Classification		0/70/21	0/70/21	
Pollution Degree (DIN VDE 0110/39)		2	2	
Maximum Working Insulation Voltage	V_{IORM}	630	567	V_{peak}
Input to Output Test Voltage, Method b[a] $V_{IORM} \times 1.875 = V_{PR}$, 100% Production Test with $t_m = 1s$, Partial Discharge < 5 pC	V_{PR}	1181	1063	V_{peak}
Input to Output Test Voltage, Method a[a] V_{IORM} x 1.6 = V_{PR}, Type and Sample Test, $t_m = 10s$, Partial Discharge < 5 pC	V_{PR}	1008	907	V_{peak}
Highest Allowable Overvoltage[a] (Transient Overvoltage $t_{ini} = 60s$)	V_{IOTM}	8000	6000	V_{peak}
Safety-limiting values – Maximum Values Allowed in the Event of a Failure				
Case Temperature	T_S	175	150	°C
Input Current	$I_{S, INPUT}$	230	150	mA
Output Power	$P_{S, OUTPUT}$	600	600	mW
Insulation Resistance at T_S, V_{IO} = 500V	R_S	$\geq 10^9$	$\geq 10^9$	Ω

a. Refer to the front of the optocoupler section of the current catalog, under Product Safety Regulations section IEC/EN/DIN EN 60747-5-5, for a detailed description.

NOTE Isolation characteristics are guaranteed only within the safety maximum ratings, which must be ensured by protective circuits in the application.

chanhvinh.com

IEC/EN/DIN EN 60747-5-5 Insulation Characteristics[a] (HCNW135/6 Option 060 Only)

Description	Symbol	Characteristic	Units
Installation Classification per DIN VDE 0110/39, Table 1			
for rated mains voltage ≤ 150 V_{rms}		I – IV	
for rated mains voltage ≤ 300 V_{rms}		I – IV	
for rated mains voltage ≤ 600 V_{rms}		I – IV	
for rated mains voltage ≤ 1000 V_{rms}		I – III	
Climatic Classification		0/70/21	
Pollution Degree (DIN VDE 0110/39)		2	
Maximum Working Insulation Voltage	V_{IORM}	1414	V_{peak}
Input to Output Test Voltage, Method b[a] $V_{IORM} \times 1.875 = V_{PR}$, 100% Production Test with $t_m = 1s$, Partial Discharge < 5 pC	V_{PR}	2651	V_{peak}
Input to Output Test Voltage, Method a[a] $V_{IORM} \times 1.6 = V_{PR}$, Type and Sample Test, $t_m = 10s$, Partial Discharge < 5 pC	V_{PR}	2262	V_{peak}
Highest Allowable Overvoltage[a] (Transient Overvoltage $t_{ini} = 60s$)	V_{IOTM}	8000	V_{peak}
Safety-limiting values – Maximum Values Allowed in the Event of a Failure			
Case Temperature	T_S	150	°C
Input Current	$I_{S, INPUT}$	400	mA
Output Power	$P_{S, OUTPUT}$	700	mW
Insulation Resistance at T_S, $V_{IO} = 500V$	R_S	$\geq 10^9$	Ω

a. Refer to the front of the optocoupler section of the current catalog, under Product Safety Regulations section IEC/EN/DIN EN 60747-5-5, for a detailed description.

NOTE Isolation characteristics are guaranteed only within the safety maximum ratings, which must be ensured by protective circuits in the application.

chanhvinh.com

Absolute Maximum Rating

Parameter	Symbol	Device	Min.	Max.	Units	Note
Storage Temperature[a]	T_S		–55	125	°C	
Operating Temperature[a]	T_A	8-Pin DIP SO-8	–55	100	°C	
		Widebody	–55	85		
Average Forward Input Current[a]	$I_{F(AVG)}$		—	25	mA	b
Peak Forward Input Current[a] (50% duty cycle, 1-ms pulse width)	$I_{F(PEAK)}$	8-Pin DIP SO-8	—	50	mA	c
50% duty cycle, 1 ms pulse width		Widebody	—	40		
Peak Transient Input Current[a] (1-µs pulse width, 300 pps)	$I_{F(TRANS)}$	8-Pin DIP SO-8	—	1	A	
		Widebody	—	0.1		
Reverse LED Input Voltage[a] (Pin 3-2)	V_R	8-Pin DIP SO-8	—	5	V	
		Widebody	—	3		
Input Power Dissipation[a]	P_{IN}	8-Pin DIP SO-8	—	45	mW	d
		Widebody	—	40		
Average Output Current[a] (Pin 6)	$I_{O(AVG)}$		—	8	mA	
Peak Output Current[a]	$I_{O(PEAK)}$		—	16	mA	
Emitter-Base Reverse Voltage[a] (Pin 5-7)	V_{EBR}		—	5	V	
Supply Voltage (Pin 8-5)	V_{CC}		–0.5	30	V	
Output Voltage (Pin 6-5)	V_O		–0.5	20	V	
Supply Voltage[a] (Pin 8-5)	V_{CC}		–0.5	15	V	
Output Voltage[a] (Pin 6-5)	V_O		–0.5	15	V	
Base Current[a] (Pin 7)	I_B		—	5	mA	
Output Power Dissipation[a]	P_O		—	100	mW	e
Lead Solder Temperature[a] (Through-Hole Parts Only) 1.6 mm below seating plane, 10s up to seating plane, 10s	T_{LS}	8-Pin DIP	—	260	°C	
		Widebody		260	°C	
Reflow Temperature Profile	T_{RP}	SO-8 and Option 300	See Package Outline Drawings section			

a. Data has been registered with JEDEC for the 6N135/6N136.

b. Derate linearly above 70°C free-air temperature at a rate of 0.8 mA/°C (8-Pin DIP). Derate linearly above 85°C free-air temperature at a rate of 0.5 mA/°C (SO-8).

c. Derate linearly above 70°C free-air temperature at a rate of 1.6 mA/°C (8-Pin DIP). Derate linearly above 85°C free-air temperature at a rate of 1.0 mA/°C (SO-8).

d. Derate linearly above 70°C free-air temperature at a rate of 0.9 mW/°C (8-Pin DIP). Derate linearly above 85°C free-air temperature at a rate of 1.1 mW/°C (SO-8).

e. Derate linearly above 70°C free-air temperature at a rate of 2.0 mW/°C (8-Pin DIP). Derate linearly above 85°C free-air temperature at a rate of 2.3 mW/°C (SO-8).

chanhvinh.com

Electrical Specifications (DC)

Over recommended operating temperature (T_A = 0°C to 70°C) and unless otherwise specified. See note.

Parameter	Symbol	Device	Min.	Typ.[a]	Max.	Units	Test Conditions			Figure	Note
Current Transfer Ratio	CTR[b]	6N135 HCPL-0500 HCNW135	7	18	50	%	T_A = 25°C	V_O = 0.4V	I_F = 16 mA, V_{CC} = 4.5V	1, 2, 4	c, d
			5	19	—			V_O = 0.5V			
		HCPL-2502	15		22		T_A = 25°C	V_O = 0.4V			
			15	25	—			V_O = 0.5V			
		6N136 HCPL-0501 HCNW136	19	24	50		T_A = 25°C	V_O = 0.4V			
			15	25	—			V_O = 0.5V			
Logic Low Output Voltage	V_{OL}	6N135 HCPL-0500 HCNW135	—	0.1	0.4	V	T_A = 25°C	I_O = 1.1 mA	I_F = 16 mA, V_{CC} = 4.5V		
			—	0.1	0.5			I_O = 0.8 mA			
		6N136 HCPL-2502 HCPL-0501 HCNW136	—	0.1	0.4		T_A = 25°C	I_O = 3.0 mA			
			—	0.1	0.5			I_O = 2.4 mA			
Logic High Output Current	I_{OH}[b]		—	0.003	0.5	µA	T_A = 25°C	V_O = V_{CC} = 5.5V	I_F = 0 mA	7	
			—	0.01	1		T_A = 25°C	V_O = V_{CC} = 15V			
			—	—	50			V_O = V_{CC} = 15V			
Logic Low Supply Current	I_{CCL}		—	50	200	µA	I_F = 16 mA, V_O = Open, V_{CC} = 15V				
Logic High Supply Current	I_{CCH}[b]		—	0.02	1	µA	T_A = 25°C	I_F = 0 mA, V_O = Open			
			—	—	2			V_{CC} = 15V			
Input Forward Voltage	V_F[b]	8-Pin DIP	—	1.5	1.7	V	T_A = 25°C	I_F = 16 mA		3	
		SO-8	—	—	1.8						
		Widebody	1.45	1.68	1.85		T_A = 25°C	I_F = 16 mA			
			1.35	—	1.95						
Input Reverse Breakdown Voltage	BV_R[b]	8-Pin DIP	5	—	—	V	I_R = 10 µA				
		SO-8									
		Widebody	3	—	—		I_R = 100 µA				
Temperature Coefficient of Forward Voltage	$\Delta V_F/\Delta T_A$	8-Pin DIP	—	–1.6		mV/°C	I_F = 16 mA				
		SO-8									
		Widebody	—	–1.9							
Input Capacitance	C_{IN}	8-Pin DIP	—	60	—	pF	f = 1 MHz, V_F = 0V				
		SO-8									
		Widebody	—	90	—						

chanhvinh.com

Parameter	Symbol	Device	Min.	Typ.[a]	Max.	Units	Test Conditions	Figure	Note
Transistor DC Current Gain	h_{FE}	8-Pin DIP	—	150	—		V_O = 5V, I_O = 3 mA		
		Widebody	—	180	—		V_O = 5V, I_O = 3 mA		
			—	160	—		V_O = 0.4V, I_B = 20 µA		

a. All typicals at T_A = 25°C.

b. For JEDEC registered parts.

c. CURRENT TRANSFER RATIO in percent is defined as the ratio of output collector current, I_O, to the forward LED input current, I_F, times 100.

d. The JEDEC registration for the 6N136 specifies a minimum CTR of 15%. Avago guarantees a minimum CTR of 19%.

NOTE Use of a 0.1-µf bypass capacitor connected between pins 5 and 8 is recommended.

Switching Specifications (AC)

Over recommended temperature (T_A = 0°C to 70°C), V_{CC} = 5V, I_F = 16 mA unless otherwise specified.

Parameter	Symbol	Device	Min.	Typ.[a]	Max.	Units	Test Conditions		Figure	Note
Propagation Delay Time to Logic Low at Output	t_{PHL}[b]	6N135 HCPL-0500 HCNW135	—	0.2	1.5	µs	T_A = 25°C	R_L = 4.1 kΩ	5, 6, 11	c, d
		6N136 HCPL-2502 HCPL-0501 HCNW136	—	0.2	0.8		T_A = 25°C	R_L = 1.9 kΩ		
			—	—	1.0					
Propagation Delay Time to Logic High at Output	t_{PLH}[b]	6N135 HCPL-0500 HCNW135	—	1.3	1.5	µs	T_A = 25°C	R_L = 4.1 kΩ	5, 6, 11	c, d
			—	—	2.0					
		6N136 HCPL-2502 HCPL-0501 HCNW136	—	0.6	0.8		T_A = 25°C	R_L = 1.9 kΩ		
			—	—	1.0					
Common Mode Transient Immunity at Logic High Level Output	$\|CM_H\|$	6N135	1	—	—	kV/µs	R_L = 4.1 kΩ	I_F = 0 mA, T_A = 25°C, V_{CM} = 10 V_{p-p}, C_L = 15 pF	12	c, d, e
		HCPL-0500 HCNW135	—	1	—					
		6N136	1	—	—		R_L = 1.9 kΩ			
		HCPL-2502 HCPL-0501	—	1	—					
Common Mode Transient Immunity at Logic Low Level Output	$\|CM_L\|$	6N135	1	—	—	kV/µs	R_L = 4.1 kΩ	I_F = 16 mA, T_A = 25°C, C_L = 15 pF	12	c, d, e
		HCPL-0500 HCNW135	—	1	—					
		6N136	1	—	—		R_L = 1.9 kΩ			
		HCPL-2502HCPL-0501	—	1	—					
Bandwidth	BW	6N135/6 HCPL-2502 HCPL-0500/1	—	9	—	MHz	See Test Circuit		8, 10	f
		HCNW135/6	—	11	—					

a. All typicals at T_A = 25°C.

b. For JEDEC registered parts.

c. The 1.9 kΩ load represents 1 TTL unit load of 1.6 mA and the 5.6 kΩ pull-up resistor.

chanhvinh.com

d. The 4.1 kΩ load represents 1 LSTTL unit load of 0.36 mA and 6.1 kΩ pull-up resistor.

e. Common mode transient immunity in a Logic High level is the maximum tolerable (positive) dV_{CM}/dt on the leading edge of the common mode pulse signal, V_{CM}, to assure that the output will remain in a Logic High state (that is, $V_O > 2.0V$). Common mode transient immunity in a Logic Low level is the maximum tolerable (negative) dV_{CM}/dt on the trailing edge of the common mode pulse signal, V_{CM}, to assure that the output will remain in a Logic Low state (that is, $V_O < 0.8$ V).

f. The frequency at which the ac output voltage is 3 dB below its mid-frequency value.

Package Characteristics

Over recommended temperature (T_A = 0°C to 70°C) unless otherwise specified.

Parameter	Sym.	Device	Min.	Typ.[a]	Max.	Units	Test Conditions	Figure	Note
Input-Output Momentary Withstand Voltage[b]	V_{ISO}	8-Pin DIP SO-8	3750	—	—	V_{rms}	RH < 50%, t = 1 min., T_A = 25°C		c, d
		Widebody	5000	—	—				c, e
		8-Pin DIP (Option 020)	5000	—	—				c, e, f
	I_{I-O}	8-Pin DIP	—	—	1	µA	45% RH, t = 5s, V_{I-O} = 3 kVdc, T_A = 25°C		c, g
Input-Output Resistance	R_{I-O}	8-Pin DIP SO-8	—	10^{12}	—	Ω	V_{I-O} = 500 Vdc		c
		Widebody	10_{12}	10^{13}	—		T_A = 25°C		
			10_{11}	—	—		T_A = 100°C		
Input-Output Capacitance	C_{I-O}	8-Pin DIP SO-8	—	0.6	—	pF	f = 1 MHz		c
		Widebody	—	0.5	0.6				

a. All typicals at T_A = 25°C.

b. The Input-Output Momentary Withstand Voltage is a dielectric voltage rating that should not be interpreted as an input-output continuous voltage rating. For the continuous voltage rating refer to the IEC/EN/DIN EN 60747-5-5 Insulation Related Characteristics Table (if applicable), your equipment level safety specification or Avago Application Note 1074, *Optocoupler Input-Output Endurance Voltage*, publication number 5963-2203E.

c. Device considered a two-terminal device: Pins 1, 2, 3, and 4 shorted together and Pins 5, 6, 7, and 8 shorted together.

d. In accordance with UL 1577, each optocoupler is proof tested by applying an insulation test voltage ≥ 4500 V_{rms} for 1 second (leakage detection current limit, I_{I-O} ≤ 5 µA). This test is performed before the 100% Production test shown in the IEC/EN/DIN EN 60747-5-5 Insulation Related Characteristics Table if applicable.

e. In accordance with UL 1577, each optocoupler is proof tested by applying an insulation test voltage ≥ 6000 V_{rms} for 1 second (leakage detection current limit, I_{I-O} ≤ 5 µA). This test is performed before the 100% Production test shown in the IEC/EN/DIN EN 60747-5-5 Insulation Related Characteristics Table if applicable.

f. Refer to the Option 020 data sheet for more information.

g. This rating is equally validated by an equivalent ac proof test.

chanhvinh.com

Figure 1 DC and Pulsed Transfer Characteristics

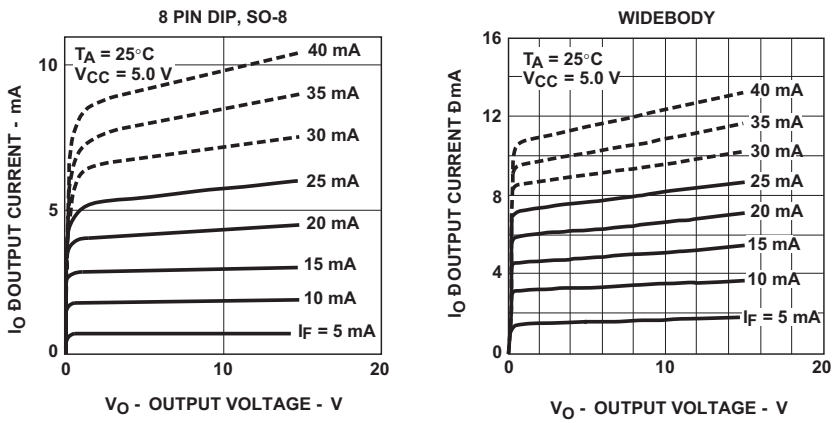

Figure 2 Current Transfer Ratio vs. Input Current

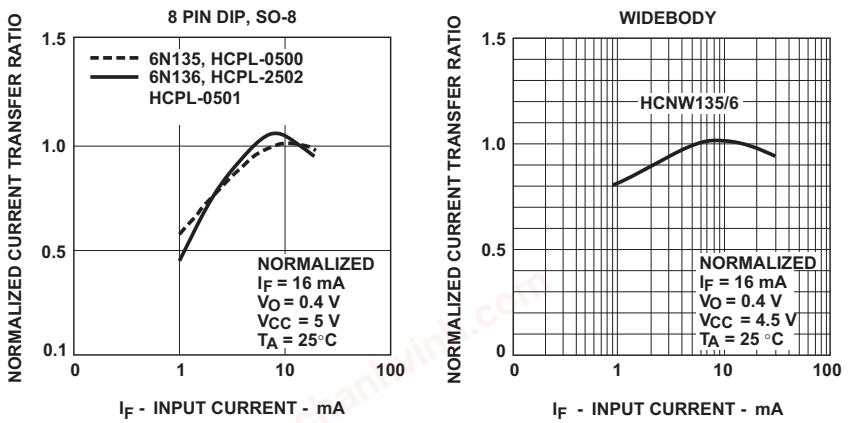

Figure 3 Input Current vs. Forward Voltage

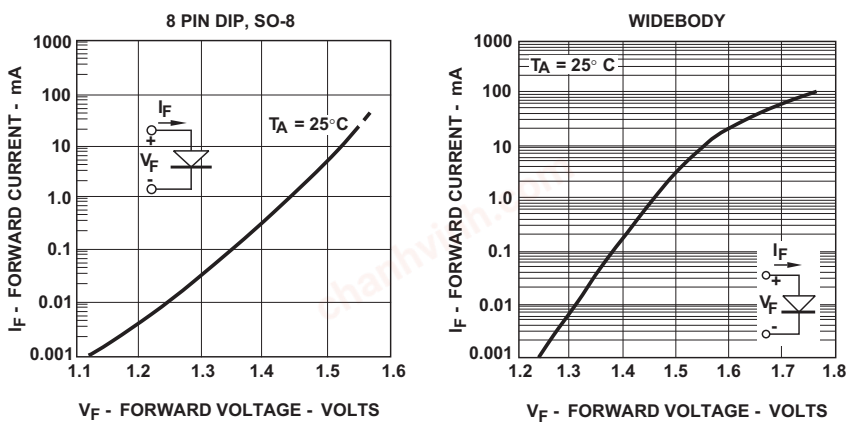

chanhvinh.com

Figure 4 Current Transfer Ratio vs. Temperature

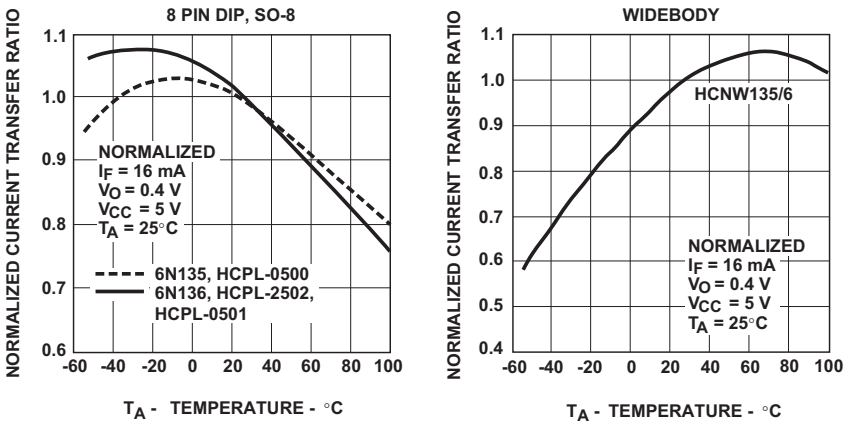

Figure 5 Propagation Delay vs. Temperature

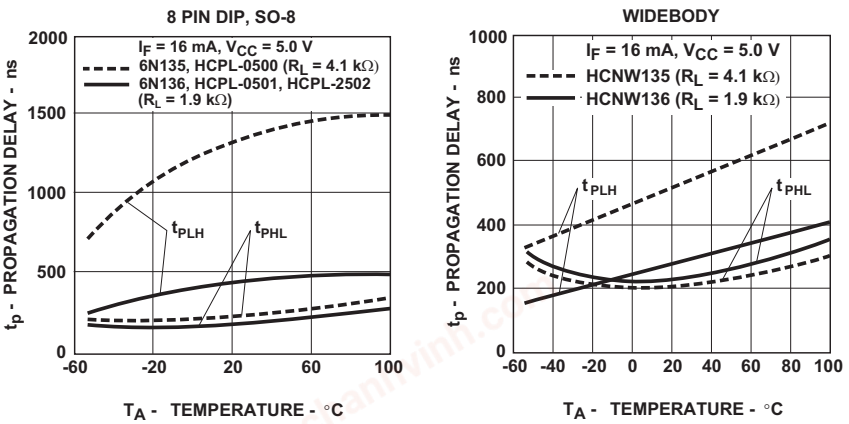

Figure 6 Propagation Delay Time vs. Load Resistance

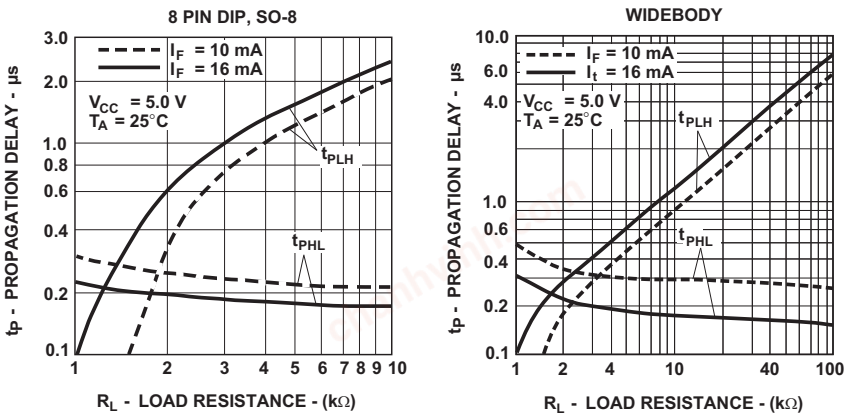

chanhvinh.com

Figure 7 Logic High Output Current vs. Temperature

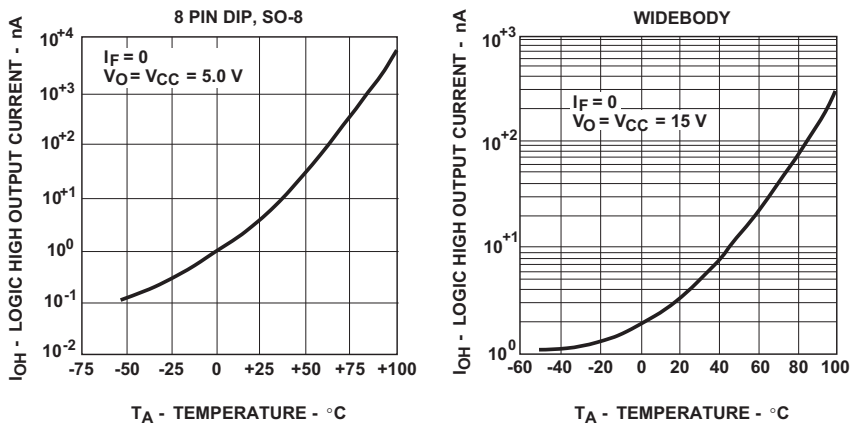

Figure 8 Small-Signal Current Transfer Ratio vs. Quiescent Input Current

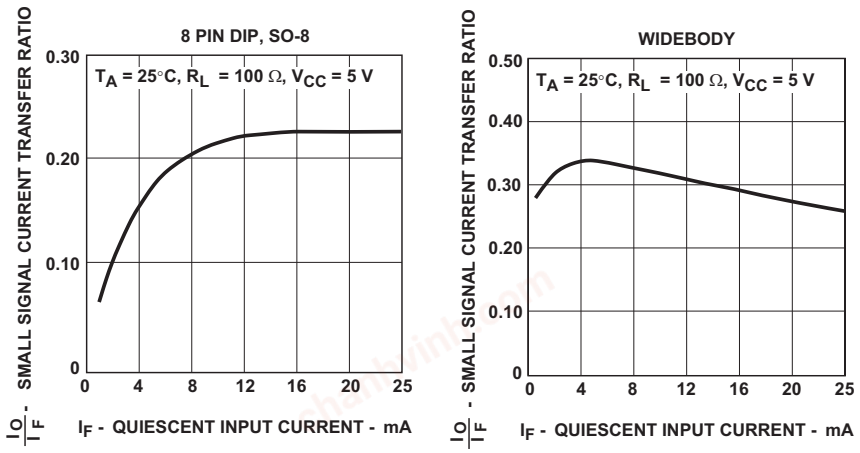

Figure 9 Thermal Derating Curve, Dependence of Safety Limiting Value with Case Temperature per IEC/EN/DIN EN 60747-5-5

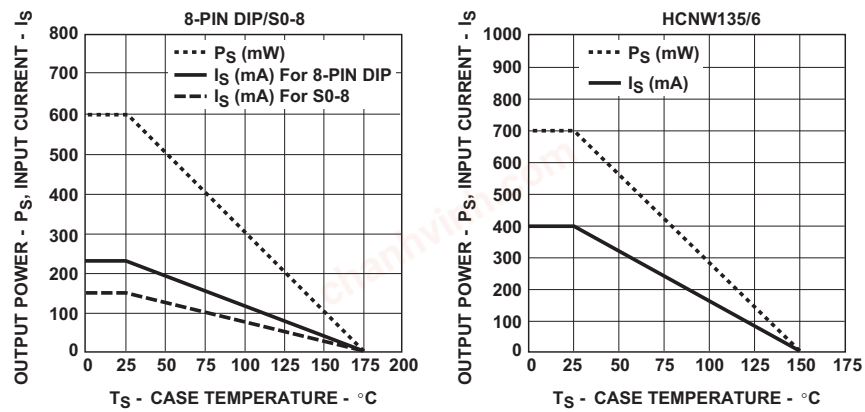

chanhvinh.com

Figure 10 Frequency Response

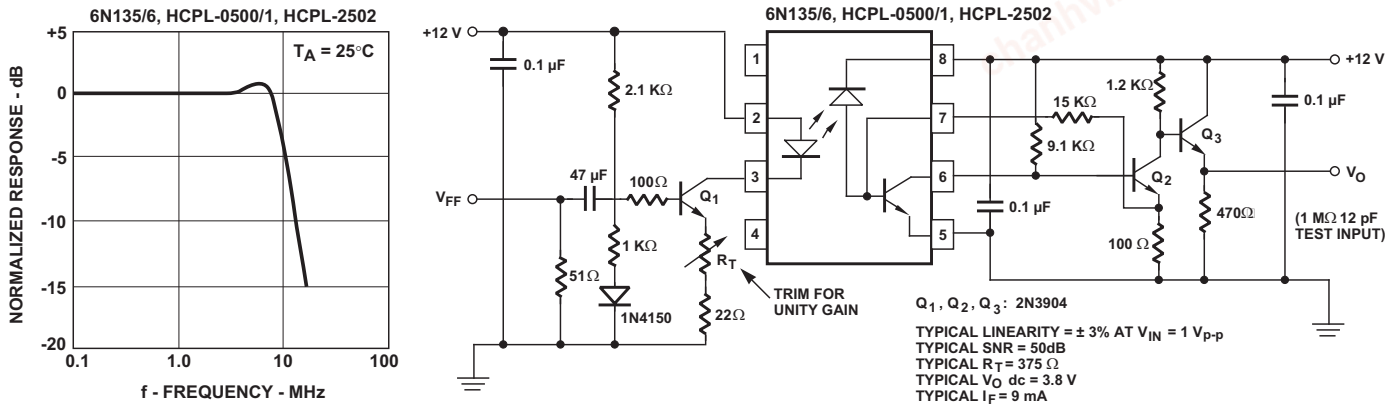

Figure 11 Switching Test Current

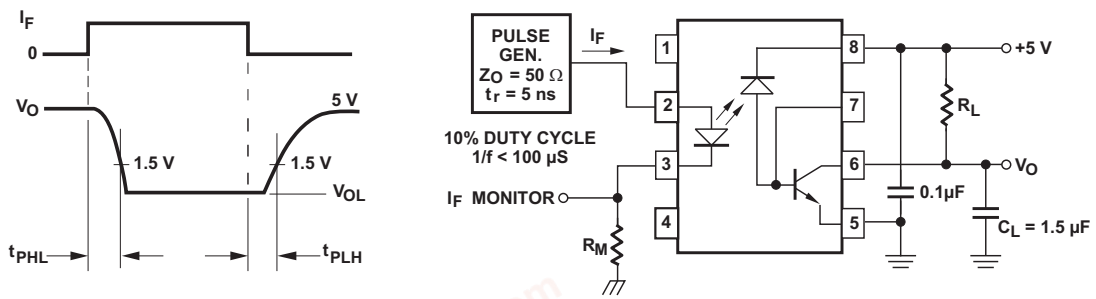

Figure 12 Test Circuit for Transient Immunity and Typical Waveforms

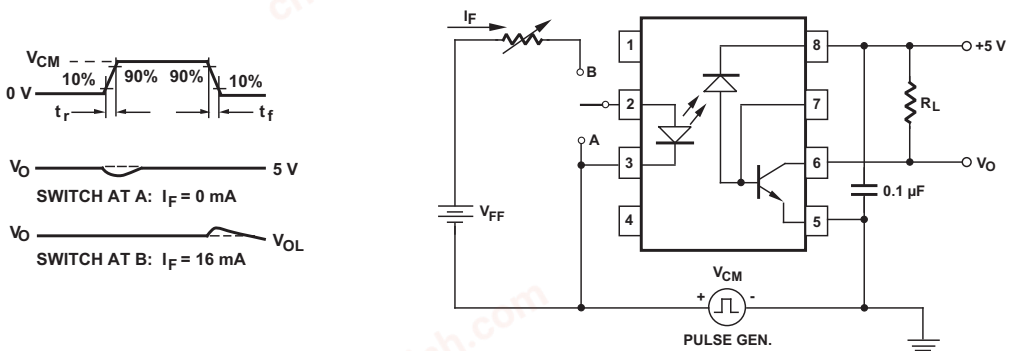

chanhvinh.com

For product information and a complete list of distributors, please go to our web site: www.broadcom.com.

Broadcom, the pulse logo, Connecting everything, Avago Technologies, Avago, and the A logo are among the trademarks of Broadcom and/or its affiliates in the United States, certain other countries and/or the EU.

Copyright © 2014–2017 by Broadcom. All Rights Reserved.

The term "Broadcom" refers to Broadcom Limited and/or its subsidiaries. For more information, please visit www.broadcom.com.

Broadcom reserves the right to make changes without further notice to any products or data herein to improve reliability, function, or design.

Information furnished by Broadcom is believed to be accurate and reliable. However, Broadcom does not assume any liability arising out of the application or use of this information, nor the application or use of any product or circuit described herein, neither does it convey any license under its patent rights nor the rights of others.

AV02-0171EN – August 3, 2017

Lead (Pb) Free
RoHS 6 fully compliant
RoHS 6 fully compliant options available;
-xxxE denotes a lead-free product