chanhvinh.com

HCMS-235x

CMOS Extended Temperature Range

5 x 7 Alphanumeric Display

Data Sheet



Description

This sunlight viewable 5 x 7 LED four-character display is contained in 12 pin dual-in-line packages designed for displaying alphanumeric information. The display is designed with on-board CMOS integrated circuits. Two CMOS ICs form an on-board 28-bit serial-in/parallel-out shift register with constant current output LED row drivers. Decoded column data is clocked into the on-board shift register for each refresh cycle. Full character display is achieved with external column strobing.

Typical Applications

- Avionics
- Communication systems
- Fire control systems
- Radar systems

Features

- On-Board low power CMOS IC
  Integrated shift register with constant current LED drivers
- Wide operating temperature range
  -55°C to +100°C
- Compact glass ceramic 4 character package
  Series X-Y stackable
- Sunlight viewable
- 5 x 7 LED matrix displays full ASCII set
- Character height of 5.0 mm (0.20 inch)
- Wide viewing angle
  X Axis = ±50°
  Y Axis = ±65°
- Usable in night vision lighting applications

chanhvinh.com

Package Dimensions

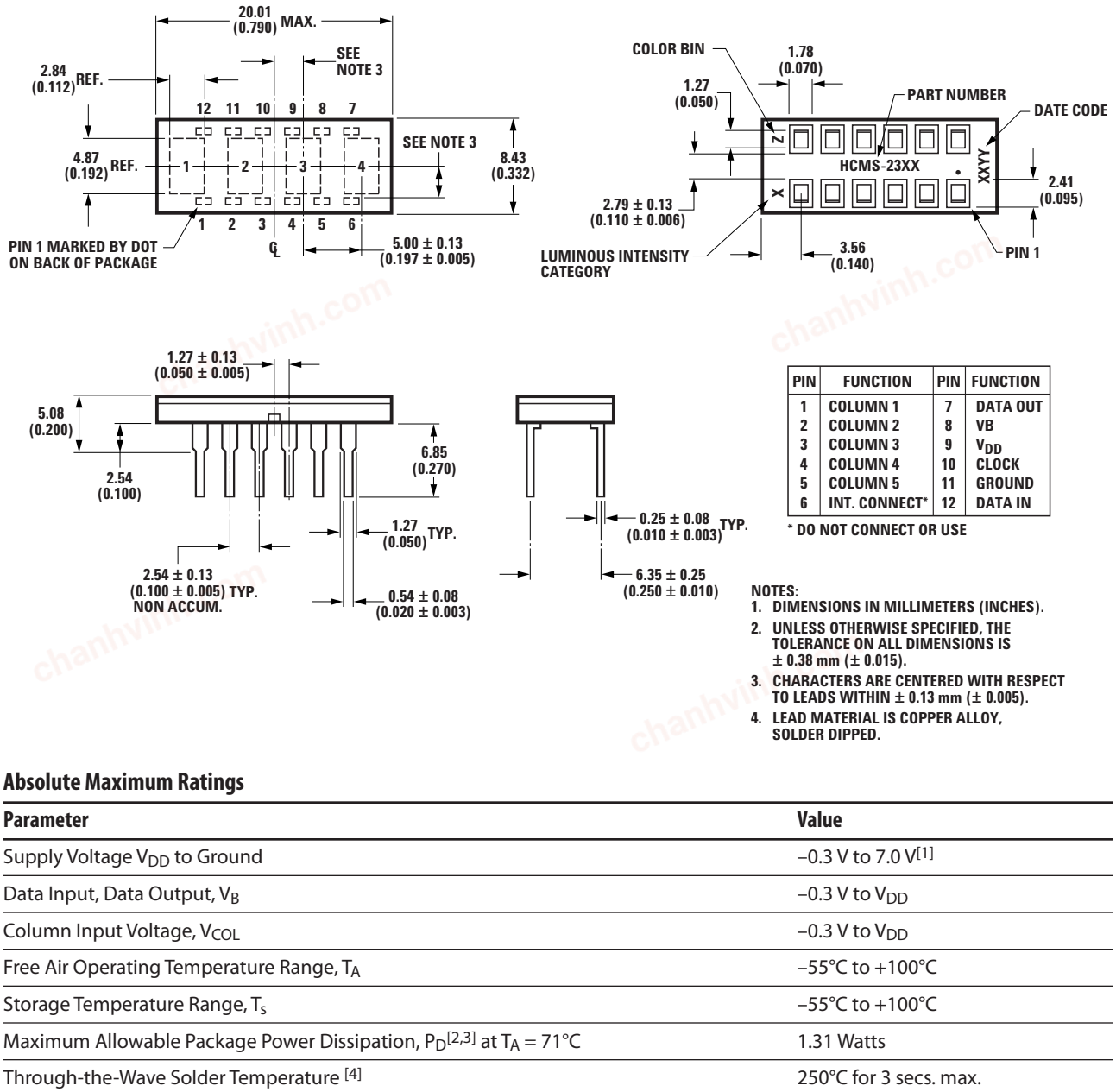

PIN	FUNCTION	PIN	FUNCTION
1	COLUMN 1	7	DATA OUT
2	COLUMN 2	8	VB
3	COLUMN 3	9	V_{DD}
4	COLUMN 4	10	CLOCK
5	COLUMN 5	11	GROUND
6	INT. CONNECT*	12	DATA IN

* DO NOT CONNECT OR USE

NOTES:
1. DIMENSIONS IN MILLIMETERS (INCHES).
2. UNLESS OTHERWISE SPECIFIED, THE TOLERANCE ON ALL DIMENSIONS IS ± 0.38 mm (± 0.015).
3. CHARACTERS ARE CENTERED WITH RESPECT TO LEADS WITHIN ± 0.13 mm (± 0.005).
4. LEAD MATERIAL IS COPPER ALLOY, SOLDER DIPPED.

Absolute Maximum Ratings

Parameter	Value
Supply Voltage V_{DD} to Ground	–0.3 V to 7.0 V[1]
Data Input, Data Output, V_B	–0.3 V to V_{DD}
Column Input Voltage, V_{COL}	–0.3 V to V_{DD}
Free Air Operating Temperature Range, T_A	–55°C to +100°C
Storage Temperature Range, T_s	–55°C to +100°C
Maximum Allowable Package Power Dissipation, P_D[2,3] at T_A = 71°C	1.31 Watts
Through-the-Wave Solder Temperature [4]	250°C for 3 secs. max.
Solder Dipping Temperature [4]	260°C for 5 secs. max.
ESD Protection @ 1.5 kΩ, 100 pF	V_Z = 4 kV

Notes:
1. Maximum duration 2 seconds.
2. Maximum allowable power dissipation is derived from V_{DD} = 5.25 V, V_B = 2.4 V, V_{COL} = 3.5 V, 20 LEDs ON per character, 20% DF.
3. HCMS-2353 derate above 71°C at 23 mW/°C, $R\theta_{J-A}$ = 45°C/W.
   Derating based on $R\theta_{PC-A}$ = 35°C/W per display for printed circuit board assembly.
4. 1.59 mm (0.063") Below Body

chanhvinh.com

Recommended Operating Conditions

Over Operating Range (–55°C to + 100°C)

Parameter	Symbol	Min.	Typ.	Max	Units
Supply Voltage	V_{DD}	4.75	5.00	5.25	V
Data Out Current, Low State	I_{OL}			1.6	mA
Data Out Current, High State	I_{OH}			–0.5	mA
Column Input Voltage	V_{COL}	2.75	3.0	3.5	V
Setup Time	t_{SETUP}	10			ns
Hold Time	t_{HOLD}	25			ns
Clock Pulse Width High	$t_{WH(CLOCK)}$	50			ns
Clock Pulse Width Low	$t_{WL(CLOCK)}$	50			ns
Clock High to Low Transition	t_{THL}			200	ns
Clock Frequency	f_{CLOCK}			5	MHz

Electrical Characteristics

Over Operating Range (–55°C to + 100°C)

Parameter	Symbol	Test Conditions	Min	Typ.*	Max	Units
Supply Current, Dynamic[1]	I_{DDD}	f_{CLOCK} = 5 MHz		6.2	7.8	mA
Supply Current, Static[2]	$I_{DDDSoff}$	V_B = 0.4 V, Data and Clock = 0.4 V		1.8	26	mA
	I_{DDDSon}	V_B = 2.4 V, Data and Clock = 0.4 V		2.2	6.0	
Column Input Current	I_{COL}	V_B = 0.4 V			10	µA
		V_B = 2.4 V		500	650	mA
Input Logic High Data, V_B, Clock	V_{IH}	V_{DD} = 4.75 V	2.0			V
Input Logic Low Data, V_B, Clock	V_{IL}	V_{DD} = 5.25 V			0.8	V
Input Current	I_I	V_{DD} = 5.25 V				
Data		V_I[3] = 2.4 V (Logic High) or	–46	–60	–103	µA
Clock, V_B		V_I[3] = 0.4 V (Logic Low)	–92	–120	–206	
Data Out Voltage	V_{OH}	V_{DD} = 4.75 V I_{OH} = –0.5 mA I_{COL} = 0 mA	2.4	4.2		V
	V_{OL}	V_{DD} = 5.25 V I_{OL} = 1.6 mA I_{COL} = 0 mA		0.2	0.4	V
Power Dissipation Per Package[4]	P_D	V_{DD} = 5.0 V V_{COL} = 3.5 V 17.5% DF V_B = 2.4 V 15 LEDs ON per Character		668		mW
Thermal Resistance IC Junction-to-Pin [5]	$R\theta_{J\text{-}PIN}$			10		°C/W
Leak Rate					$5x10^{-8}$	cc/sec

*All typical values specified at V_{DD} = 5.0 V and T_A = 25°C.

Notes:
1. I_{DD} Dynamic is the IC current while clocking column data through the on-board shift register at a clock frequency of 5 MHz, the display is not illuminated.
2. I_{DD} Static is the IC current after column data is loaded and not being clocked through the on-board shift register.
3. V_I represents the input voltage to an input pin.
4. Four characters are illuminated with a typical ASCII character composed of 15 dots per character.
5. IC junction temperature T_J (IC) = $(P_D)(R\theta_{J\text{-}PIN} + R\theta_{PC\text{-}A}) + T_A$.

chanhvinh.com

Optical Characteristics at $T_A = 25°C$

High Performance Green HCMS-2353

Description	Symbol	Test Condition	Min.	Typ.*	Max.	Units
Peak Luminous Intensity per LED [6] (Character Average)	I_{vPEAK}	$V_{DD} = 5.0$ V $V_{COL} = 3.5$ V $V_B = 2.4$ V $T_i = 25°C$ [7]	2400	3000		µcd
Dominant Wavelength [8,9]	λ_d			574		nm
Peak Wavelength	λ_{PEAK}			568		nm

Yellow HCMS-2351

Description	Symbol	Test Condition	Min	Typ.*	Max.	Units
Peak Luminous Intensity per LED [6] (Character Average)	I_{vPEAK}	$V_{DD} = 5.0$V $V_{COL} = 3.5$ V $V_B = 2.4$V Ti = 25°C [7]	1600	2400		µcd
Dominant Wavelength [8,9]	λ_d			585		nm
Peak Wavelength	λ_{PEAK}			583		nm

*All typical values specified at $V_{DD} = 5.0$ V and $T_A = 25°C$ unless otherwise noted.

Notes:
6. These LED displays are categorized for luminous intensity, with the intensity category designated by a letter code on the back of the package.
7. T_i refers to the initial case temperature of the display immediately prior to the light measurement.
8. Dominant wavelength, λ_d, is derived from the CIE Chromaticity Diagram, and represents the single wavelength which defines the color of the device.
9. Categorized for color with the color category designated by a number on the back of the package.

Switching Characteristics

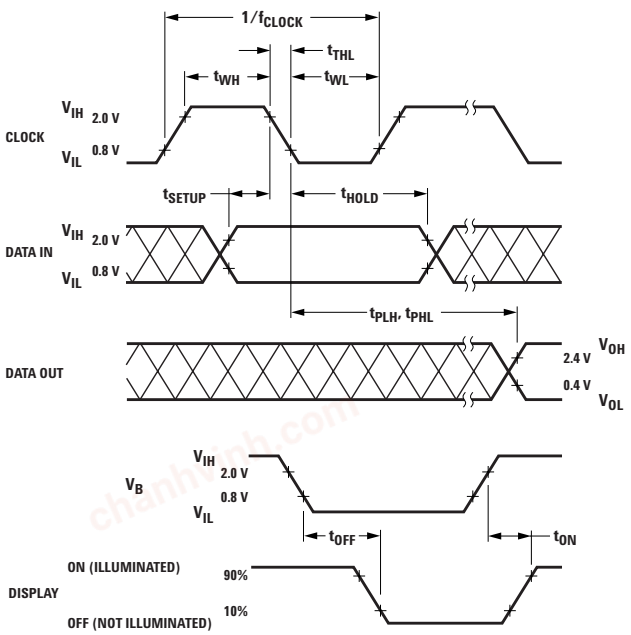

Parameter	Condition	Typ.	Max.	Units
f_{clock} CLOCK Rate			5	MHz
t_{PLH}, t_{PHL} Propagation Delay CLOCK to DATA OUT	$C_L = 15$ pF $R_L = 2.4$ kΩ		105	ns
t_{OFF} V_B (0.4 V) to Display OFF		4	5	µs
t_{ON} V_B (2.4 V) to Display ON		1	2	

chanhvinh.com

Electrical Description

The display contains four 5 x 7 LED dot matrix characters and two CMOS integrated circuits, as shown in Figure 1. The two CMOS integrated circuits form an on-board 28 bit serial-in/parallel-out shift register that will accept standard TTL logic levels. The Data Input, pin 12, is connected to bit position 1 and the Data Output, pin 7, is connected to bit position 28. The shift register outputs control constant current sinking LED row drivers. A logic 1 stored in the shift register enables the corresponding LED row driver and a logic 0 stored in the shift register disables the corresponding LED row driver.

The electrical configuration of these CMOS IC alphanumeric displays allows for an effective interface to a display controller circuit that supplies decoded character information. The row data for a given column (one 7 bit byte per character) is loaded (bit serial) into the on-board 28 bit shift register with high to low transitions of the Clock input. To load decoded character information into the display, column data for character 4 is loaded first and the column data for character 1 is loaded last in the following manner. The 7 data bits for column 1, character 4, are loaded into the on-board shift register. Next, the 7 data bits for column 1, character 3, are loaded into the shift register, shifting the character 4 data over one character position. This process is repeated for the other two characters until all 28 bits of column data (four 7 bit bytes of character column data) are loaded into the on-board shift register. Then the column 1 input, V_{COL} pin 1, is energized to illuminate column 1 in all four characters. This process is repeated for columns 2, 3, 4 and 5. All V_{COL} inputs should be at logic low to insure the display is off when loading data. The display will be blanked when the blanking input V_B, pin 8, is at logic low regardless of the outputs of the shift register or whether one of the V_{COL} inputs is energized. Refer to Application Note 1016 for drive circuit information.

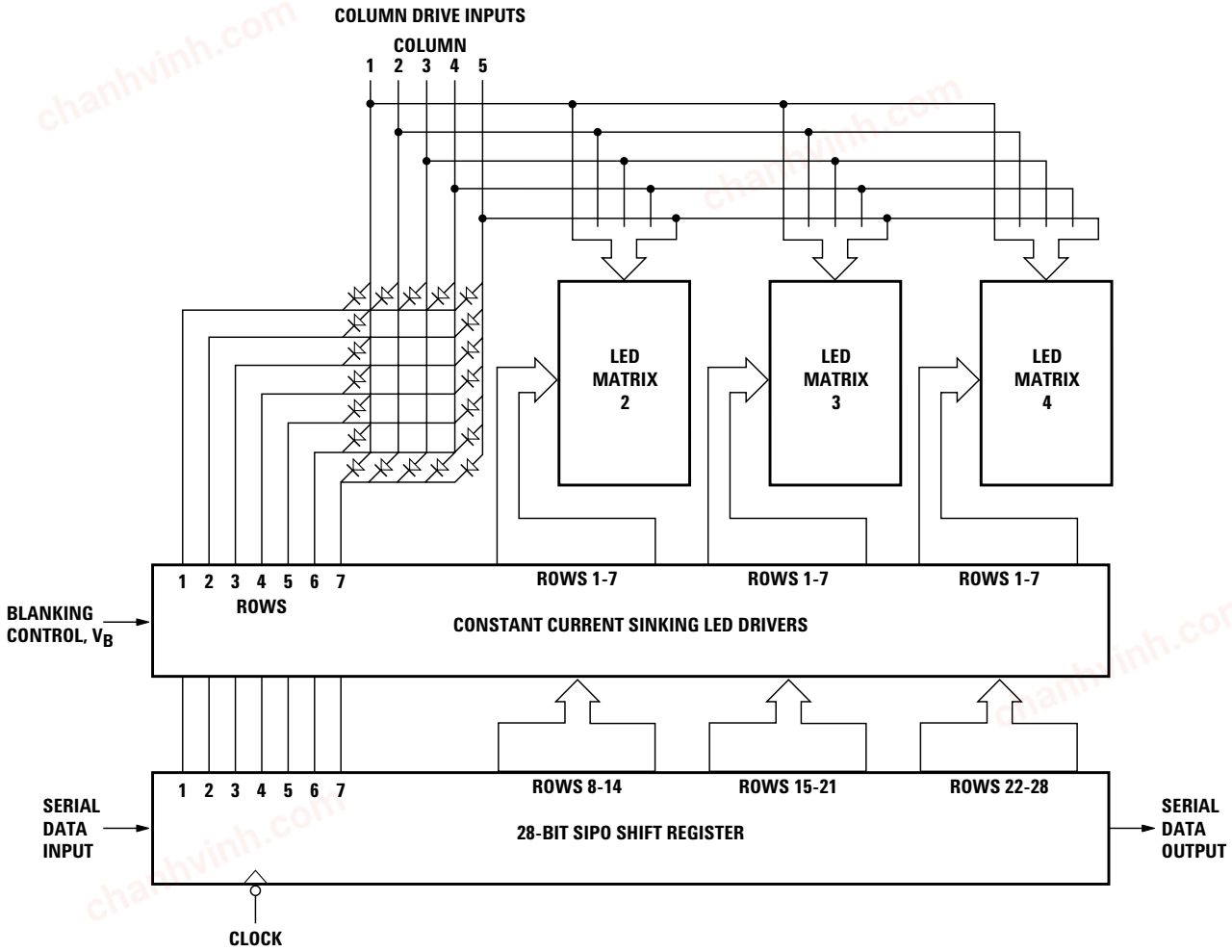

Figure 1. Display block diagram.

chanhvinh.com

ESD Susceptibility

The display has an ESD susceptibility ratings of CLASS 3 of MIL-STD-883E, HBM. It is recommended that normal CMOS handling precautions be observed with these devices.

Soldering and Post Solder Cleaning

These displays may be soldered with a standard wave solder process using either an RMA flux and solvent cleaning or an OA flux and aqueous cleaning. For optimum soldering, the solder wave temperature should be 245 °C and the dwell time for any display lead passing through the wave should be 1.5 to 2 seconds. For more detailed information, refer to Application Note 1027, Soldering LED Components.

Contrast Enhancement

When used with the proper contrast enhancement filters, the display is readable in sunlight.

Refer to Application Note 1029, Luminous Contrast and Sunlight Readability of the HDSP-235X Series Alphanumeric Displays for Sunlight Viewable Applications, for information on contrast enhancement for sun-light and daylight ambient. Refer to Application Note 1015, Contrast Enhancement Techniques for LED Displays, for information on contrast enhancement in moderate ambients

Night Vision Lighting

When used with the proper NVG/DV filters, HCMS-235x display may be used in night vision lighting applications. For a list of NVG/DV filters and a discussion on night vision lighting technology, refer to Application Note 1030, LED Displays and Indicators and Night Vision Imaging System Lighting.

Controller Circuits, Power Calculations, and Display Dimming

Refer to Application Note 1016, Using the HDSP-2000 Alphanumeric Display Family, for information on controller circuits to drive these displays, how to do power calculations, and a technique for display dimming.

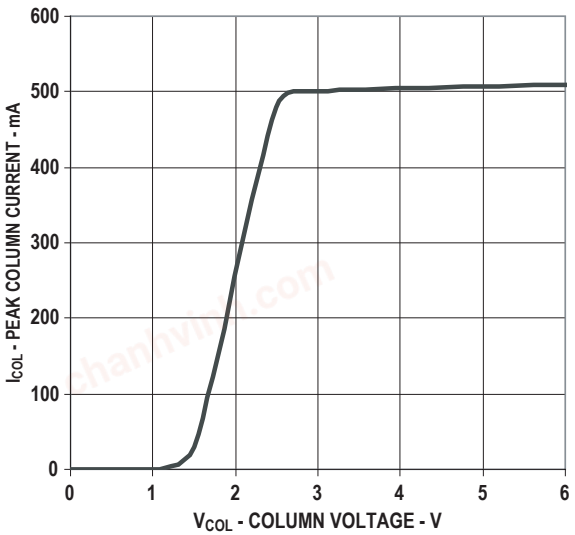

Figure 2. Peak column current vs. column voltage at $T_A = 25°C$.

chanhvinh.com

For product information and a complete list of distributors, please go to our web site: **www.avagotech.com**

Avago, Avago Technologies, and the A logo are trademarks of Avago Technologies in the United States and other countries.
Data subject to change. Copyright © 2005-2008 Avago Technologies. All rights reserved. Obsoletes 5989-3180EN
AV02-0195EN - November 28, 2008