chanhvinh.com

AFBR-16xxZ and AFBR-26x4Z/25x9Z

DC-50MBd Versatile Link Fiber Optic Transmitter and Receiver for 1 mm POF and 200 µm PCS

Data Sheet

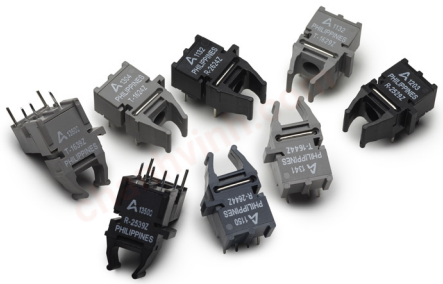

Description

The AFBR-16xxZ transmitter utilizes a 650 nm LED source with integrated optics and driver IC for efficient coupling into 1 mm Polymer Optical Fiber (POF). The AFBR-26x4Z/25x9Z receiver consists of an IC with an integrated photodiode to produce a logic compatible output. The transmitter input and receiver output are compatible with TTL logic families. The pair operates any type of signal from DC up to 50 MBd at distances up to 50 m with 1 mm POF, up to 200 m at 10 MBd and 120 m at 50 MBd with 200 µm Plastic-Clad Silica (PCS), respectively.

The transmitter is a 3-pin and the receiver is a 4-pin device, packed in Versatile Link housing. Versatile Link components can be interlocked (N-plexed together) to minimize space and to provide dual connections with the duplex connectors. Various simplex and duplex connectors, as well as POF cables are available for Versatile Link components. For details, contact Avago Technologies or visit our company website at www.avagotech.com

AFBR-xxx4Z are delivering non-inverted output signals while AFBR-xxx9Z deliver inverted output signals.

AFBR-xxxxZ - Part number selection guide

AFBR – x x x x Z

- 1 = Transmitter (TX)
- 2 = Receiver (RX)
- Z = Extended Temperature Range, RoHS Compliant
- 5/6 = 650 nm products
- 2 = Horizontal Package
- 3 = Vertical Package
- 4 = Tilted (30°) Package
- 4 = 50 MBd Non-Inverted
- 9 = 50 MBd Inverted

Available options

Horizontal Package	AFBR-x624Z	AFBR-1629Z	AFBR-2529Z
Vertical Package	AFBR-x634Z	AFBR-1639Z	AFBR-2539Z
Tilted (30°) package	AFBR-x644Z		

Features

- RoHS-compliant
- Data transmission at signal rates from DC up to 50 MBd
- Transmitter: integrated 650 nm LED and driver IC with TTL input logic
- Receiver: integrated PIN diode and digitalizing IC with TTL output logic
- Up to 50 m distance with 1 mm Polymer Optical Fiber (POF) over operating temperature range
- Up to 200 m (10 MBd) distance and 120 m (50 MBd) distance with 200 µm Plastic-Clad Silica (PCS) over operating temperature range
- Operating temperature range of -40 °C to +85 °C
- Compatible with Avago's Versatile Link family of connectors, for easy termination of fiber

Applications

Optical Transmitter and Receiver for 50 MBd systems and below:

- Industrial control and factory automation
- Extension of RS-232 and RS-485
- High voltage isolation
- Elimination of ground loops
- Reduces voltage transient susceptibility

chanhvinh.com

Application Literature

Application Note 1035 (Versatile Link) - AV02-0730EN

Package and Handling Information

The compact Versatile Link package is made of a flame-retardant material and uses the same pad layout as a standard, eight-pin dual-in-line package. Horizontal, Vertical, and Tilted (30°) packages are available. These low profile Versatile Link packages are stackable and are enclosed to provide a dust-resistant seal. Snap action simplex, simplex latching, duplex, and duplex latching connectors are offered with simplex or duplex cables.

Package Orientation

Performance and pinouts for the horizontal, vertical, and tilted (30°) packages are identical. To provide additional attachment support for the vertical Versatile Link housing, the designer has the option of using a self-tapping screw through a printed circuit board into a mounting hole at the bottom of the package. For most applications this is not necessary.

Package Housing Color

Versatile Link components and simplex connectors are color coded to eliminate confusion when making connections. Receiver packages are black and transmitter packages are gray in color respectively.

Handling

Versatile Link components are auto-insertable. When wave soldering is performed with Versatile Link components, the optical port plug should be left in to prevent contamination of the port. Do not use reflow solder processes (i.e., infrared reflow or vapor-phase reflow). Nonhalogenated water soluble fluxes (i.e., 0% chloride), not rosin based fluxes, are recommended for use with Versatile Link components.

Versatile Link components are moisture sensitive devices and are shipped in a moisture sealed bag. If the components are exposed to air for an extended period of time, they may require a baking step before the soldering process. Refer to the special labeling on the shipping tube for details.

Recommended Chemicals for Cleaning/Degreasing

Alcohols: methyl, isopropyl, isobutyl. Aliphatics: hexane, heptane. Other: soap solution, naphtha.

Do not use partially halogenated hydrocarbons such as 1,1.1 trichloroethane, ketones such as MEK, acetone, chloroform, ethyl acetate, methylene dichloride, phenol, methylene chloride, or N-methylpyrolldone. Also, Avago does not recommend the use of cleaners that use halogenated hydrocarbons because of their potential environmental harm.

chanhvinh.com

Mechanical Dimensions

Horizontal Module

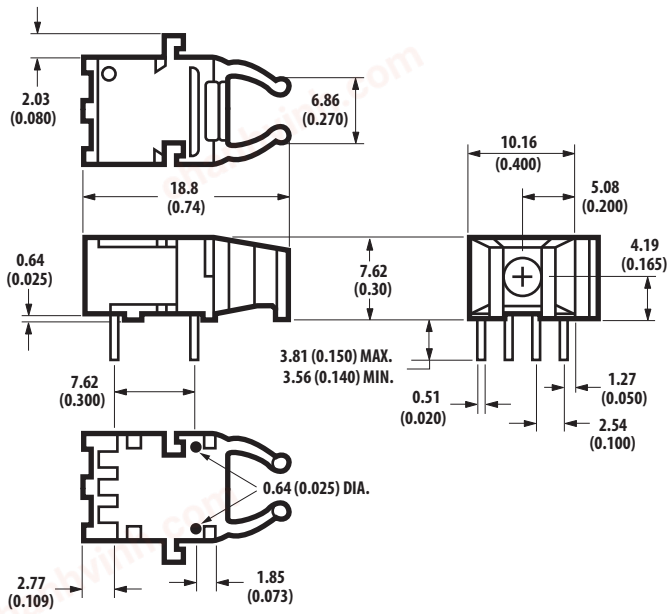

DIMENSIONS IN MILLIMETERS (INCHES).

Vertical Module

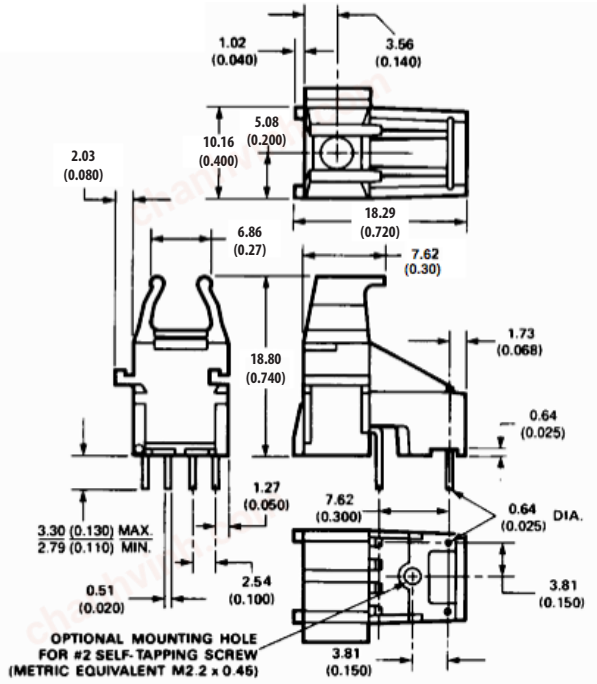

Tilted (30°) Module

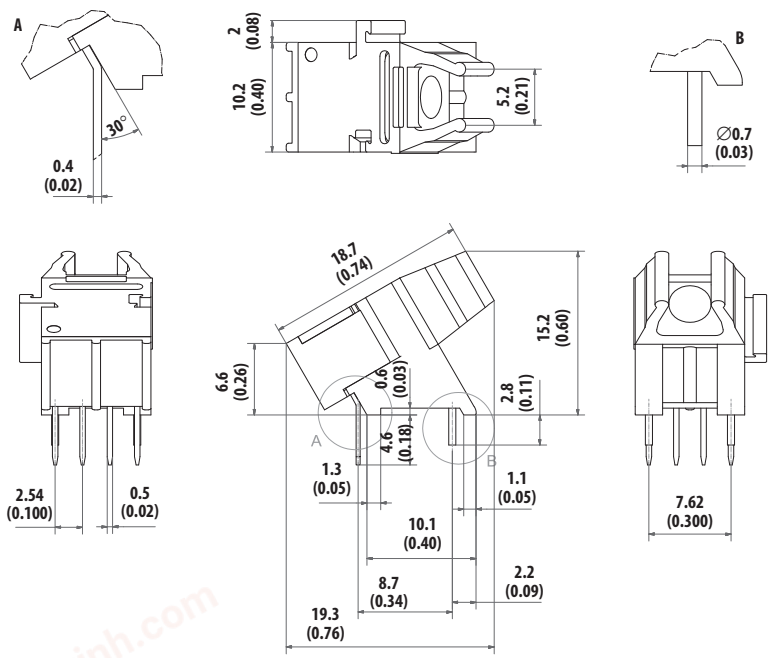

DIMENSIONS IN MILLIMETERS (INCHES).

chanhvinh.com

Versatile Link Printed Board Layout Dimensions

Horizontal Module

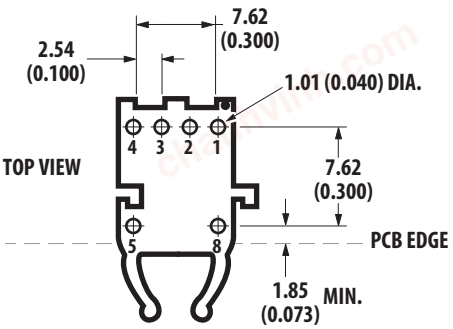

DIMENSIONS IN MILLIMETERS (INCHES).

Vertical Module

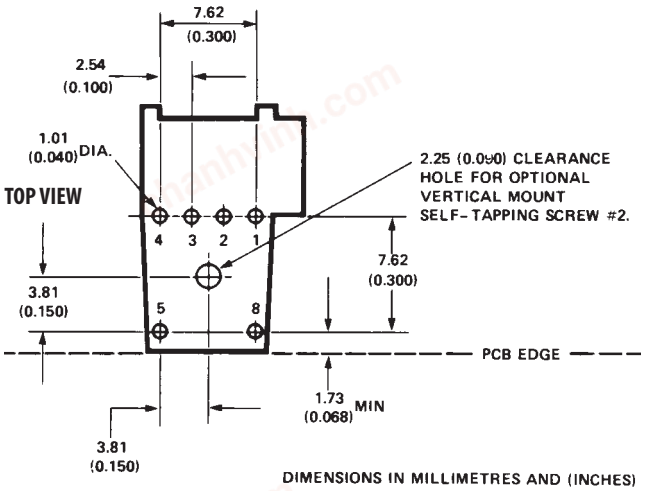

DIMENSIONS IN MILLIMETRES AND (INCHES)

Tilted (30°) Module

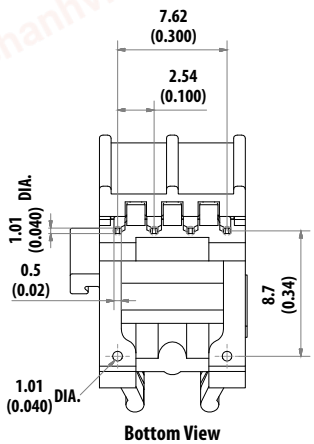

DIMENSIONS IN MILLIMETERS (INCHES).

chanhvinh.com

Interlocked (Stacked) Assemblies (refer to Figure 1)

Horizontal packages may be stacked by placing units with pins facing upward. Initially engage the interlocking mechanism by sliding the L bracket body from above into the L slot body of the lower package. Use a straight edge, such as a ruler, to bring all stacked units into uniform alignment. This technique prevents potential harm that could occur to fingers and hands of assemblers from the package pins. Stacked horizontal packages can be disengaged if necessary. Repeated stacking and unstacking causes no damage to individual units.

To stack vertical packages, hold one unit in each hand, with the pins facing away and the optical ports on the bottom. Slide the L bracket unit into the L slot unit. The straight edge used for horizontal package alignment is not needed.

Stacking Horizontal Modules

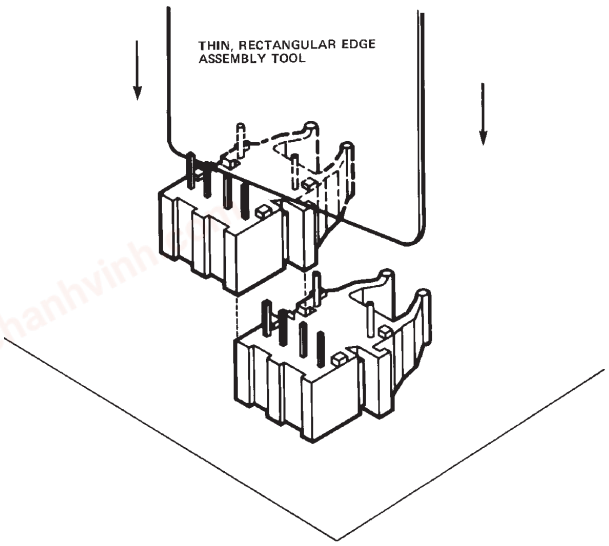

Stacking Vertical Modules

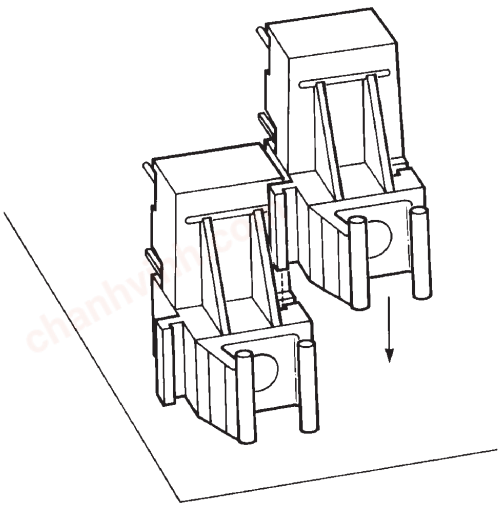

Tilted (30°) Module

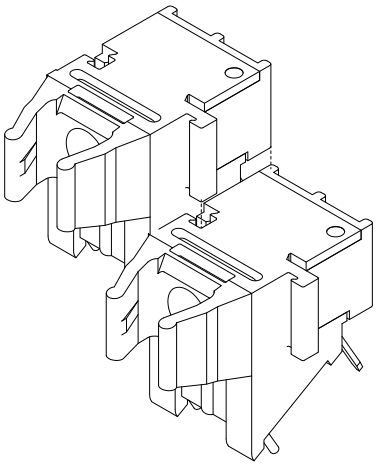

Figure 1. Interlocked (stacked) Horizontal, Vertical and Tilted (30°) packages

chanhvinh.com

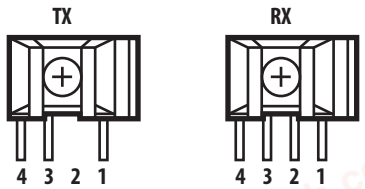

Pin Description Transmitter

Fiber port facing front, pins downward, 1 = Rightmost pin to 4 = Leftmost pin

Pin	Name	Function/Description	Notes
1	V_{CCT}	Transmitter Power 3.3 V ± 5% or 5 V ± 5%	
2	No Pin	No physical pin is available	
3	V_{EET}	Transmitter Ground	
4	Data In	Transmitter Data Input	1, 2
5	Housing Pin	Physical pin is available, recommended to chassis GND	3
8	Housing Pin	Physical pin is available, recommended to chassis GND	3

Pin Description Receiver

Fiber port facing front, pins downward, 1 = Rightmost pin to 4 = Leftmost pin

Pin	Name	Function/Description	Notes
1	Data Out	Receiver Data Output	2
2	V_{EER}	Receiver Ground	
3	V_{CCR}	Receiver Power 3.3 V ± 5% or 5 V ± 5%	
4	Pin	No function, physical pin is available, recommended to signal GND	4
5	Housing Pin	Physical pin is available, recommended to chassis GND	3
8	Housing Pin	Physical pin is available, recommended to chassis GND	3

Notes:
1. Logic 1 input will turn the light on and the logic 0 will turn the light off for AFBR-16x4Z. Logic 1 input will turn the light off and the logic 0 will turn the light on for AFBR-16x9Z.
2. TTL compatible data input and output.
3. Pin 5 and 8 are for mounting and retaining purposes, and should be connected to chassis GND.
4. It is recommended to connect this pin to signal GND.

chanhvinh.com

Regulatory Compliance

Feature	Test Method	Performance
Electrostatic Discharge (ESD) to the Electrical Pins Human Body Model	MIL-STD-883 Method 3015	Min ± 2000 V
Eye Safety	IEC 60825-1, 2, Class 1	

Specified Link Performance, T_A = -40 °C to +85 °C, 50 MBd

Parameter	Min	Max	Unit	Condition	Notes
Link Distance with Standard POF cable	0.1	50	meters	-40 °C to +85 °C	1, 3
Link distance with 200 μm PCS (10 MBd)	0.1	200	meters	-40 °C to +85 °C	2, 3
Link distance with 200 μm PCS (50 MBd)	0.1	120	meters	-40 °C to +85 °C	2, 3

Notes:
1. HFBR-R/EXXYYYZ is the part number for 1 mm POF. Worst-case attenuation used (0.27 dB/m for standard loss POF cable from -40 °C to +85 °C at 660 nm).
2. PCS, worst-case attenuation (12 dB/km from -40 °C to +85 °C at 650 nm).
3. The optical link performance is guaranteed only with transmitters AFBR-16xxZ and receivers AFBR-26x4Z/25x9Z.

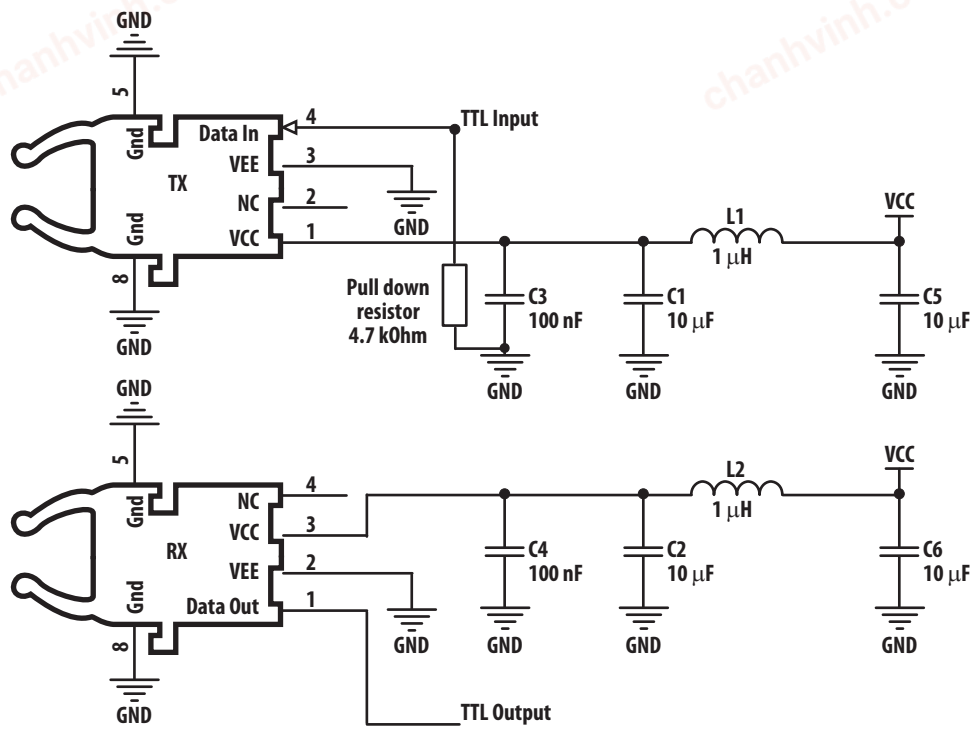

Figure 2. Recommended Transmitter and Receiver Application Circuit

chanhvinh.com

Absolute Maximum Ratings

Parameter	Symbol	Min	Typical	Max	Unit	Notes
Storage Temperature	Ts	-40		85	°C	1
Ambient Temperature	Tc	-40		85	°C	1
Relative Humidity	RH	0		85	%	1
Supply Voltage	V_{CCT} /V_{CCR}	-0.5		6	V	1
Data Input Voltage	V_{IN}	-0.5		Vcc+0.5	V	1
Data Output Current	I_O			10	mA	1
Data Rate		DC		50	MBd	

Notes:
1. Absolute Maximum Ratings are those values beyond which damage to the device may occur if these limits are exceeded for other than a short period of time.

Recommended Operating Conditions

Parameter	Symbol	Min	Typical	Max	Unit	Notes
Ambient Temp	T_A	-40	25	85	°C	2
Supply Voltage	V_{CCT}/V_{CCR}	3.135	3.3	3.465	V	2
		4.75	5	5.25	V	2

Notes:
2. Recommended operating conditions are those values outside of which functional performance is not intended, device reliability is not implied, and damage to the device may occur over an extended period of time. See Reliability Data Sheet for specific reliability performance.

Process Compatibility

Parameter	Symbol	Min	Typical	Max	Unit	Notes
Solder Environment	T_{SOLD}			260	°C	3, 5, 6
	t_{SOLD}			10	sec	4, 5, 6

Notes:
3. Maximum temperature refers to peak temperature.
4. Maximum time refers to time spent at peak temperature.
5. Solder surface to be at least 1mm below lead frame stops.
6. Product is moisture sensitive level 3.

chanhvinh.com

AFBR-16xxZ Transmitter

The AFBR-16xxZ transmitter incorporates a 650 nm LED and integrated driver IC in a light gray, nonconductive plastic Versatile Link housing. Its input data is compatible with TTL logic level. This transmitter can operate from DC to 50 MBd with any kind of data pattern using 1 mm Polymer Optical Fiber (POF). Within the specified ranges AFBR-16x4Z and AFBR-16x9Z devices will support a BER < 10E-9.

Transmitter Electrical Characteristics

(T_A = -40 °C to +85 °C, V_{CCT} = 3.3 V ± 5% or 5 V ± 5%)

Parameter	Symbol	Min	Typical	Max	Unit	Notes
Supply Current (Optical Power ON)	I_{CCT}		21	31	mA	1
Input Voltage – Low	V_{IL}	-0.3		0.8	V	2
Input Voltage – High	V_{IH}	2.0		Vcc+0.3	V	2
Data Input Capacitance	C_{IN}			7	pF	
Data Input Resistance	R_{IN}	2			kΩ	
Propagation Delay	t_{TD}			30	ns	

Transmitter Optical Characteristics

(T_A = -40 °C to +85 °C, V_{CCT} = 3.3 V ± 5% or 5 V ± 5%)

Parameter	Symbol	Min	Typical	Max	Unit	Notes
Output Optical Power (peak), 1 mm POF	P_N	-4.5	-2	+2	dBm	3
Output Optical Power (peak), PCS (200 µm)	P_N	-16.5	-13	-9	dBm	3
Output Optical Power (Average), OFF	P_S			-50	dBm	
Extinction Ratio	ER	10			dB	
Peak Wavelength	λ_c	630		685	nm	
Rise Time (20%–80%)	t_{RT}			5	ns	
Fall Time (20%–80%)	t_{FT}			5	ns	
Pulse Width Distortion	PWD	-3		+3	ns	4, 5
Pulse Width Distortion of first pulse	PWD	-5		+3	ns	5, 6

Notes:
1. For any type of data between DC and 50 Mbd. Typical value 21 mA for PRBS-7 pattern at 25 °C at 5 V and 50 Mbaud.
2. Standard TTL compatible input.
3. Measured with polished connector end face: after 1 meter 1 mm POF, NA = 0.5, or 200 µm PCS, NA = 0.37.
4. Pulse width is measured at 50% threshold using a rising edge trigger tested with PRBS-7 pattern
5. Electrical input pulse width is determined at 1.5 V and dU/dt between 1 V and 2 V shall not be less than 1 V/ns.
6. The first pulse is shorter as the LED is completely discharged. This helps to mitigate the increase of pulse width of the first pulse of the Receiver

chanhvinh.com

AFBR-26x4Z/25x9Z Receiver

The AFBR-26x4Z/25x9Z receiver consists of a digitalizing IC with integrated photodiode to produce an output level that is compatible with TTL logic. The integrated photodiode and the following amplifier uses a fully differential approach with an active and a passive area for an improved EMI performance. Within the specified ranges AFBR-25x9Z and AFBR-26x4Z devices will support a BER <10E-9.

Receiver Electrical Characteristics

(T_A = -40 °C to +85 °C, V_{CCT} = 3.3 V ± 5% or 5 V ± 5%)

Parameter	Symbol	Min	Typical	Max	Unit	Notes
Supply Current	I_{CCR}		20	30	mA	
Data Output Voltage – Low	V_{OL}	-0.3		0.4	V	1, 3
Data Output Voltage – High	V_{OH}	2.5		V_{CCR}+0.3	V	1, 3
Rise Time (10%–90%)	t_{RR}			5	ns	2, 3
Fall Time (10%–90%)	t_{FR}			5	ns	2, 3
Pulse Width Distortion	PWD	-4		+4	ns	3, 6, 7, 8, 11
Pulse Width Distortion 1st to 3rd pulse	PWD_{init}	-5		+8	ns	3, 8, 9, 11
Propagation Delay	t_{RD}			30	ns	
Max. Initiation time after Power up	T_{INT}			15	ms	12

Receiver Optical Characteristics

(T_A = -40 °C to +85 °C, V_{CCT} = 3.3 V ± 5% or 5 V ± 5%)

Parameter	Symbol	Min	Typical	Max	Unit	Notes
Input Optical Power (Peak), 1 mm POF	P_{IN}	-22		+2	dBm	3
Input Optical Power (Peak) Off-State, 1 mm POF	P_{IN_Off}	-40			dBm	3, 10
Input Optical Power (Peak), PCS (200 µm)	P_{IN}	-25		-1	dBm	3
Input Optical Power (Peak) Off-State, PCS (200 µm)	P_{IN_Off}	-44			dBm	3
Optical Spectrum Range	λ	630		685	nm	

Notes:
1. Standard TTL output.
2. Measured with R_L = 50 kΩ and C_L = 15 pF
3. Guaranteed only if optical input signal to the receiver is generated by AFBR-16xxZ, with ideal alignment to photo diode using 1mm POF (NA=0.5).
6. Optical input signal of 50 MBd, PRBS 2^7 -1 pattern and 50% duty cycle.
7. Pulse width is measured at 50% threshold using a rising edge trigger and PRBS 2^7-1 pattern.
8. If data rate is below 1MBd the pulse width distortion would be equal to the pulse width distortion of the 1st to 3rd pulses for higher datarates.
9. The threshold of the 1st pulse of a data sequence is difficult to adjust and therefore the pulse width distortion up to the 3rd pulse is higher than for all other pulses (worst case for the 1st pulse). This strongly depends on the quality of the rising and falling edge of the optical input. The faster the edges the smaller the pulse width variation. Furthermore lower data rates would result in the same issue as all the pulse become 1st pulses.
10. Output low for AFBR-26x4Z and Output high for AFBR-25x9Z.
11. Because of optical pulse width spreading, the PWD limits have to be increased by ± 0.1 ns for each 10 m fiber length.
12. Starting point is when supply voltage passes ~2.8 V.

Avago, Avago Technologies, and the A logo are trademarks of Avago Technologies in the United States and other countries.
Data subject to change. Copyright © 2005-2014 Avago Technologies. All rights reserved.
AV02-4369EN - September 5, 2014