chanhvinh.com

HFBR-0500ETZ Series

Versatile Link

The Versatile Fiber Optic Connection

Data Sheet



Description

The Versatile Link series is a complete family of fiber optic link components for applications requiring a low cost solution. The HFBR-0500ETZ series includes transmitters, receivers, connectors and cable specified for easy design. This series of components is ideal for solving problems with voltage isolation/insulation, EMI/RFI immunity or data security. The optical link design is simplified by the logic compatible receivers and complete specifi-cations for each component. The key optical and electrical parameters of links configured with the HFBR-0500ETZ family are fully guaranteed from -40° to 85° C.

A wide variety of package configurations and connectors provide the designer with numerous mechanical solutions to meet application requirements. The transmitter and receiver components have been designed for use in high volume/low cost assembly processes such as auto insertion and wave soldering.

Transmitters incorporate a 660 nm LED. Receivers include a monolithic dc coupled, digital IC receiver with open collector Schottky output transistor. An internal pullup resistor is available for use in the HFBR-25X1ETZ and HFBR-25X2ETZ receivers. A shield has been integrated into the receiver IC to provide additional, localized noise immunity.

Internal optics have been optimized for use with 1 mm diameter plastic optical fiber. Versatile Link specifications incorporate all connector interface losses. Therefore, optical calculations for common link applications are simplified.

Features

- Extended temperature range -40 to +85° C
- RoHS-compliant
- Low cost fiber optic components
- Enhanced digital links: dc-5 MBd
- Link distance up to 43m at 1MBd and 20m at 5MBd
- Low current link: 6 mA peak supply current
- Horizontal and vertical mounting
- Interlocking feature
- High noise immunity
- Easy connectoring: simplex, duplex, and latching connectors
- Flame retardant
- Transmitters incorporate a 660 nm red LED for easy visibility
- Compatible with standard TTL circuitry

Applications

- Industrial Drives/Frequency Inverters
- Renewable Energies (Wind Turbines, Solar PV farms) Power electronics
- Reduction of lightning/voltage transient susceptibility
- Motor controller triggering
- Data communications and local area networks
- Electromagnetic Compatibility (EMC) for regulated systems: FCC, VDE, CSA, etc.
- Tempest-secure data processing equipment
- Isolation in test and measurement instruments
- Error free signalling for industrial and manufacturing equipment
- Automotive communications and control networks
- Noise immune communication in audio and video equipment

chanhvinh.com

HFBR-0500ETZ Series Part Number Guide

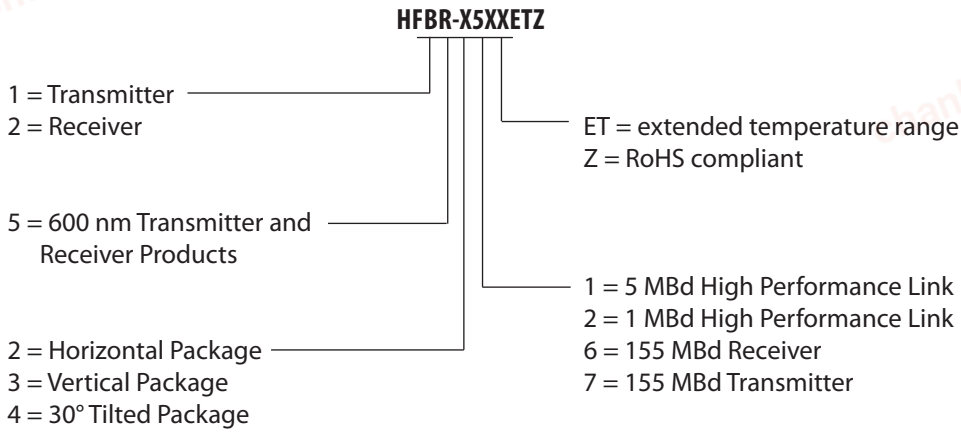

Available option – Horizontal Package

HFBR-x521ETZ	HFBR-x522ETZ

Available option – Vertical Package

HFBR-x531ETZ	HFBR-x532ETZ

Available option – 30° Tilted Package

HFBR-x541ETZ	HFBR-x542ETZ

Link Selection Guide

(Links specified from -40° to 85° C, for plastic optical fiber unless specified.)

Signal Rate	Distance (m) 25° C	Distance (m)	Transmitter	Receiver
1 MBd	67	43	HFBR-15x2ETZ	HFBR-25x2ETZ
5 Mbd	38	20	HFBR-15x1ETZ	HFBR-25x1ETZ

chanhvinh.com

Application Literature

Application Note 1035 (Versatile Link)

Package and Handling Information

The compact Versatile Link package is made of a flame retardant VALOX® UL 94 V-0 material (UL file # E121562) and uses the same pad layout as a standard, eight pin dual-in-line package. Vertical and horizontal mountable parts are available. These low profile Versatile Link packages are stackable and are enclosed to provide a dust resistant seal. Snap action simplex, simplex latching, duplex, and duplex latching connectors are offered with simplex or duplex cables.

Package Orientation

Performance and pinouts for the vertical and horizontal packages are identical. To provide additional attachment support for the vertical Versatile Link housing, the designer has the option of using a self-tapping screw through a printed circuit board into a mounting hole at the bottom of the package. For most applications this is not necessary.

Package Housing Color

Versatile Link components and simplex connectors are color coded to eliminate confusion when making connections. Receivers are blue and transmitters are gray.

Handling

Versatile Link components are auto-insertable. When wave soldering is performed with Versatile Link components, the optical port plug should be left in to prevent contamination of the port. Do not use reflow solder processes (i.e., infrared reflow or vapor-phase reflow). Nonhalogenated water soluble fluxes (i.e., 0% chloride), not rosin based fluxes, are recommended for use with Versatile Link components.

Versatile Link components are moisture sensitive devices and are shipped in a moisture sealed bag. If the components are exposed to air for an extended period of time, they may require a baking step before the soldering process. Refer to the special labeling on the shipping tube for details.

Recommended Chemicals for Cleaning/Degreasing

Alcohols: methyl, isopropyl, isobutyl. Aliphatics: hexane, heptane. Other: soap solution, naphtha.

Do not use partially halogenated hydrocarbons such as 1,1.1 trichloroethane, ketones such as MEK, acetone, chloroform, ethyl acetate, methylene dichloride, phenol, methylene chloride, or N-methylpyrolldone. Also, Avago does not recommend the use of cleaners that use halogenated hydrocarbons because of their potential environmental harm.

VALOX® is a registered trademark of the General Electric Corporation.

chanhvinh.com

Mechanical Dimensions

Horizontal Modules

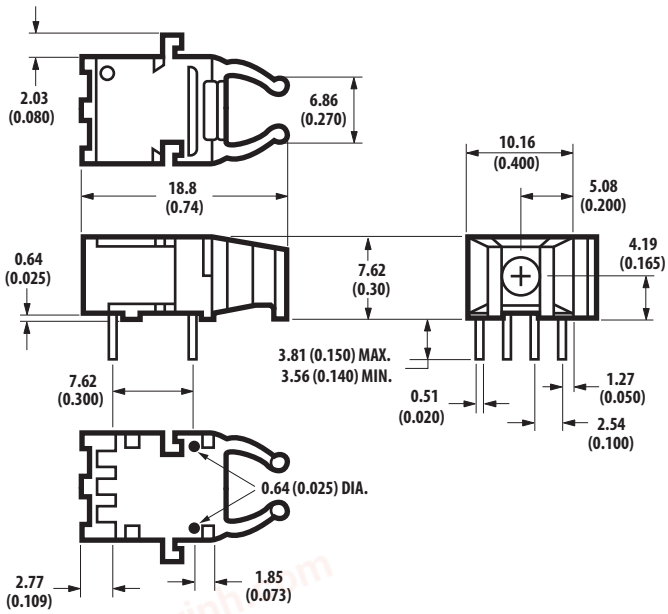

DIMENSIONS IN MILLIMETERS (INCHES).

Vertical Modules

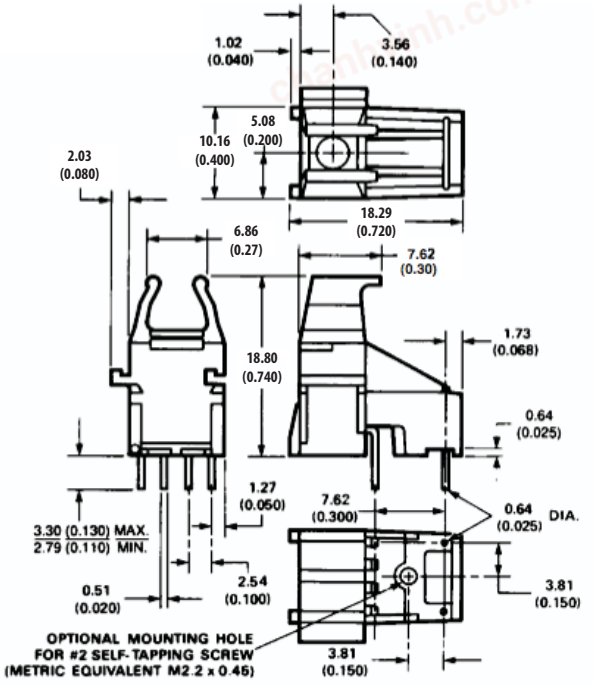

30° Tilted Modules

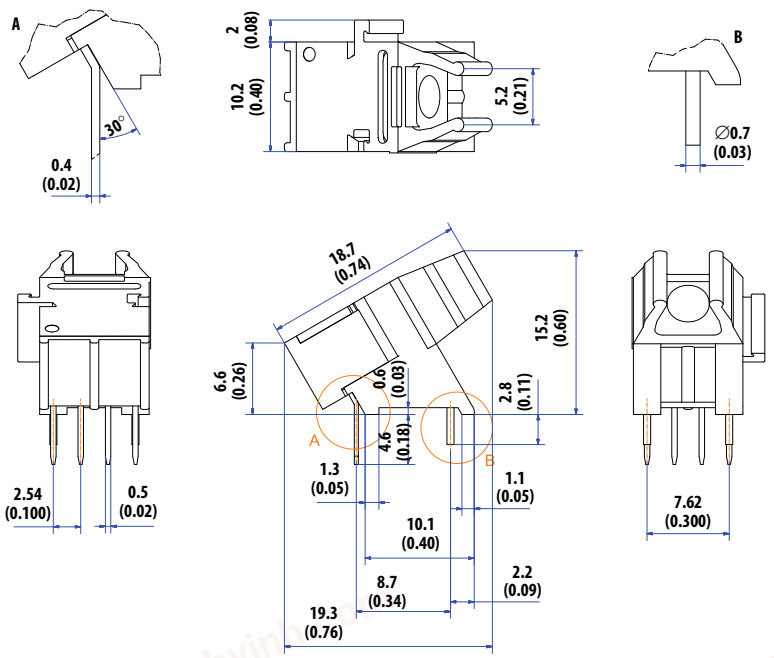

DIMENSIONS IN MILLIMETERS (INCHES).

chanhvinh.com

Versatile Link Printed Board Layout Dimensions

Horizontal Module

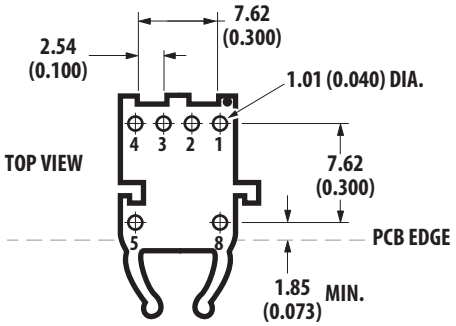

DIMENSIONS IN MILLIMETERS (INCHES).

Vertical Module

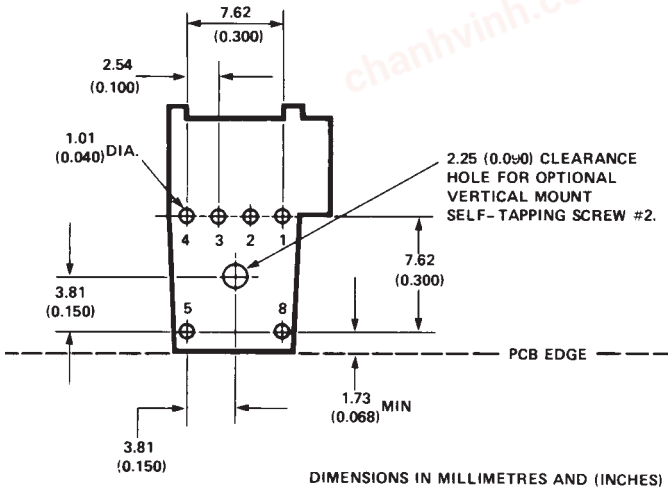

DIMENSIONS IN MILLIMETRES AND (INCHES)

30° Tilted Modules

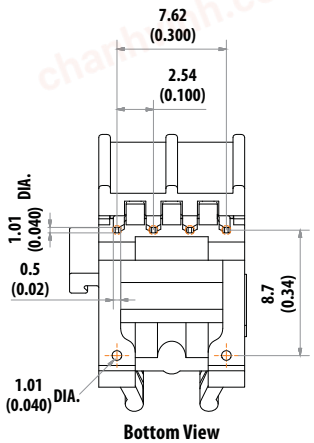

DIMENSIONS IN MILLIMETERS (INCHES).

chanhvinh.com

Interlocked (Stacked) Assemblies (refer to Figure 1)

Horizontal packages may be stacked by placing units with pins facing upward. Initially engage the interlocking mechanism by sliding the L bracket body from above into the L slot body of the lower package. Use a straight edge, such as a ruler, to bring all stacked units into uniform alignment. This technique prevents potential harm that could occur to fingers and hands of assemblers from the package pins. Stacked horizontal packages can be disengaged if necessary. Repeated stacking and unstacking causes no damage to individual units.

To stack vertical packages, hold one unit in each hand, with the pins facing away and the optical ports on the bottom. Slide the L bracket unit into the L slot unit. The straight edge used for horizontal package alignment is not needed.

Stacking Horizontal Modules

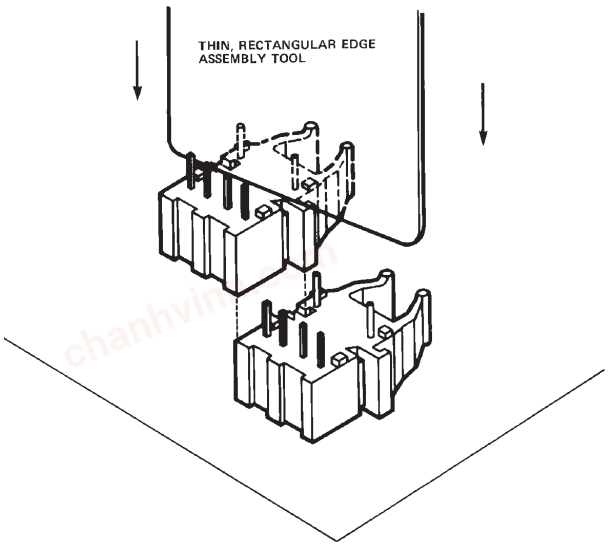

Stacking Vertical Modules

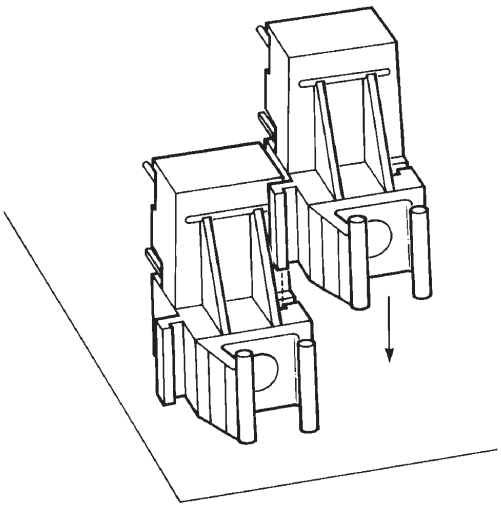

Stacking 30° Tilted Modules

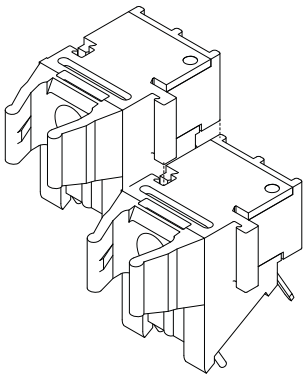

Figure 1. Interlocked (stacked) horizontal, vertical or 30° tilted packages

chanhvinh.com

5 MBd Link (HFBR-15X1ETZ/25X1ETZ)

System Performance -40° to 85° C unless otherwise specified.

	Parameter	Symbol	Min.	Typ.	Max.	Units	Conditions	Ref.
High Performance 5 MBd	Data Rate		dc		5	MBd	BER $\leq 10^{-9}$, PRBS:2^7-1	
	Link Distance (Standard Cable)	d	17 33			m m	I_{Fdc} = 60 mA I_{Fdc} = 60 mA, 25° C	Note 3
	Link Distance (Improved Cable)	d	20 38			m m	I_{Fdc} = 60 mA I_{Fdc} = 60 mA, 25° C	Note 3
	Propagation Delay	t_{PLH} t_{PHL}		90 50	140 140	ns ns	R_L = 560 Ω, C_L = 30 pF fiber length = 0.5 m -21.6 $\leq P_R \leq$ -9.5 dBm	Fig. 3, 6 Notes 1, 2
	Pulse Width Distortion t_{PLH}-t_{PHL}	t_D		40		ns	P_R = -15 dBm R_L = 560 Ω, C_L = 30 pF	Fig. 3, 5

Notes:
1. The propagation delay for one metre of cable is typically 5 ns.
2. Typical propagation delay is measured at P_R = -15 dBm.
3. Estimated typical link life expectancy at 40° C exceeds 10 years at 60 mA.

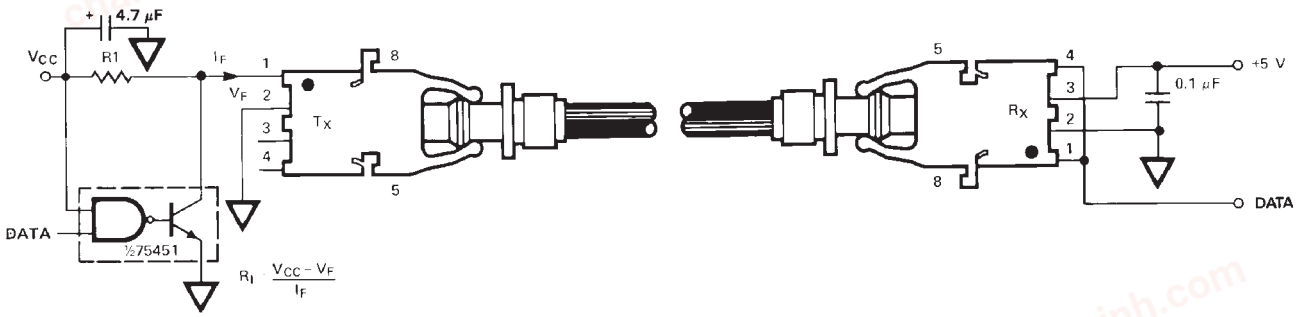

Figure 2. Typical 5 MBd interface circuit

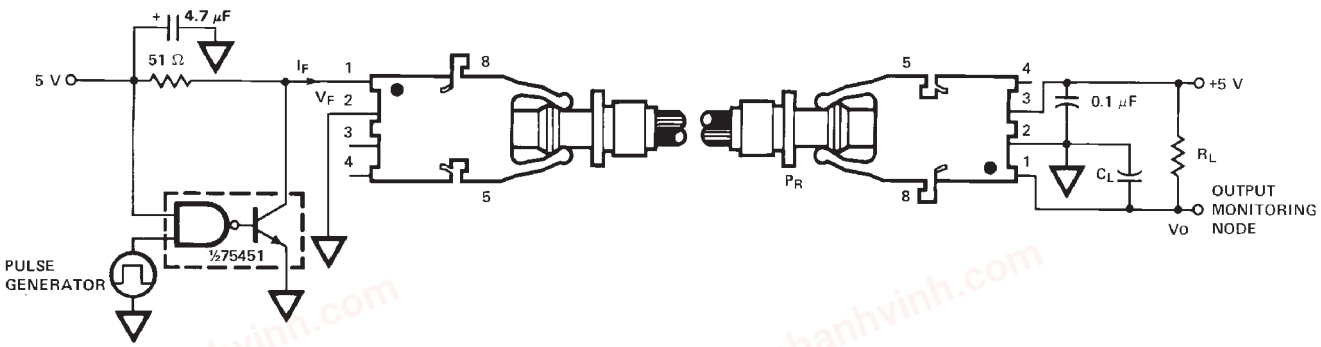

Figure 3. 5 MBd propagation delay test circuit

chanhvinh.com

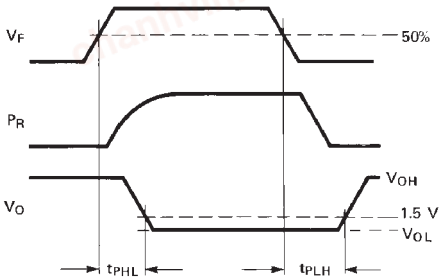

Figure 4. Propagation delay test waveforms

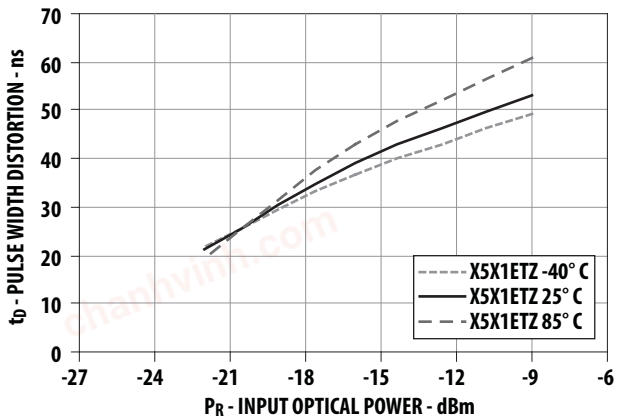

Figure 5. Typical link pulse width distortion vs. optical power

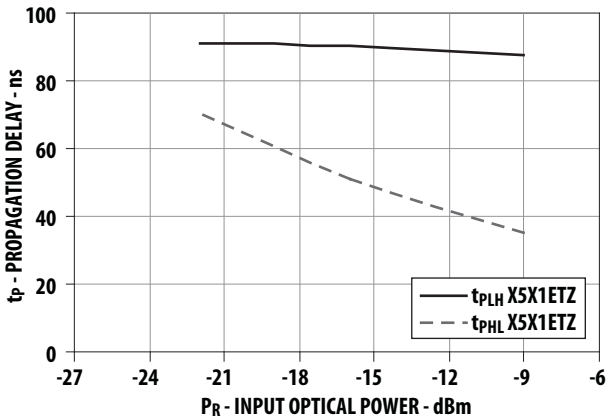

Figure 6. Typical link propagation delay vs. optical power

chanhvinh.com

HFBR-15X1ETZ Transmitter

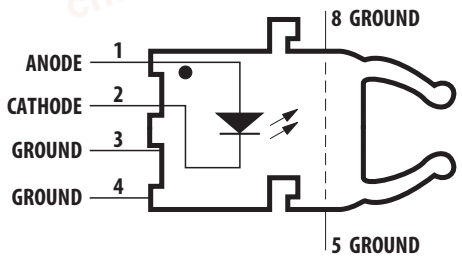

Pin #	Function
1	Anode
2	Cathode
3	Ground
4	Ground
5	Ground
8	Ground

Note: Pins 5 and 8 are for mounting and retaining purposes only. Do not electrically connect these pins.

Absolute Maximum Ratings

Parameter		Symbol	Min.	Max.	Units	Reference
Storage Temperature		T_S	–40	+85	°C	
Operating Temperature		T_A	–40	+85	°C	
Lead Soldering Cycle	Temp.			260	°C	Note 1, 4
	Time			10	sec	
Forward Input Current		I_{FPK}		1000	mA	Note 2, 3
		I_{Fdc}		80		
Reverse Input Voltage		V_{BR}		5	V	

Notes:
1. 1.6 mm below seating plane.
2. Recommended operating range between 10 and 750 mA.
3. 1 µs pulse, 20 µs period.
4. Moisture sensitivity level is MSL-3

All HFBR-15XXETZ LED transmitters are classified as IEC 825-1 Accessible Emission Limit (AEL) Class 1 based upon the current proposed draft scheduled to go into effect on January 1, 1997. AEL Class 1 LED devices are considered eye safe. Contact your local Avago sales representative for more information.

chanhvinh.com

Transmitter Electrical/Optical Characteristics -40° to 85° C unless otherwise specified.

Parameter	Symbol	Min.	Typ.[5]	Max.	Units	Conditions	Ref.
Transmitter Output Optical Power	P_T	-16.8		-7.1	dBm	I_{Fdc} = 60 mA	Notes 1, 2
		-14.3		-8.0	dBm	I_{Fdc} = 60 mA, 25° C	
Output Optical Power Temperature Coefficient	$\Delta P_T/\Delta T$		-0.85		%/°C		
Peak Emission Wavelength	λ_{PK}		660		nm		
Forward Voltage	V_F	1.43	1.67	2.05	V	I_{Fdc} = 60 mA	
Forward Voltage Temperature Coefficient	$\Delta V_F/\Delta T$		-1.37		mV/°C		Fig. 7
Effective Diameter	D		1		mm		
Reverse Input Breakdown Voltage	V_{BR}	5.0	11.0		V	I_{Fdc} = 10 µA, T_A = 25° C	
Diode Capacitance	C_O		86		pF	V_F = 0, f = MHz	
Rise Time	t_r		20		ns	10% to 90%, I_F = 60 mA	Note 3
Fall Time	t_f		20		ns		

Notes:
1. Optical power measured at the end of 0.5 m of 1 mm diameter POF (NA = 0.5) with a large area detector.
2. Optical power, P (dBm) = 10 Log [P(µW)/1000 µW].
3. Rise and fall times are measured with a voltage pulse driving the transmitter driver IC (75451). A wide bandwidth optical to electrical waveform analyzer, terminated to a 50 Ω input of a wide bandwidth oscilloscope, is used for this response time measurement.

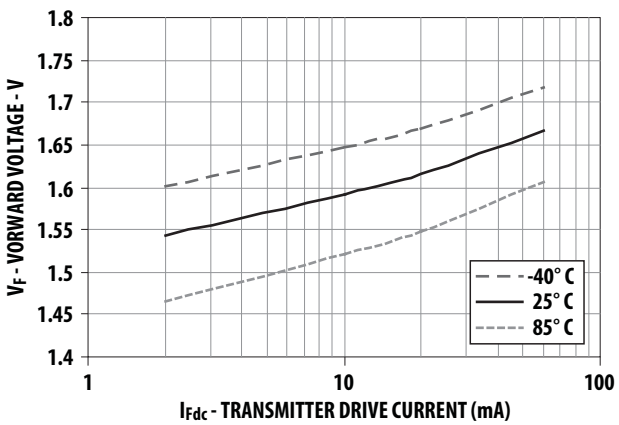

Figure 7. Typical forward voltage vs. drive current

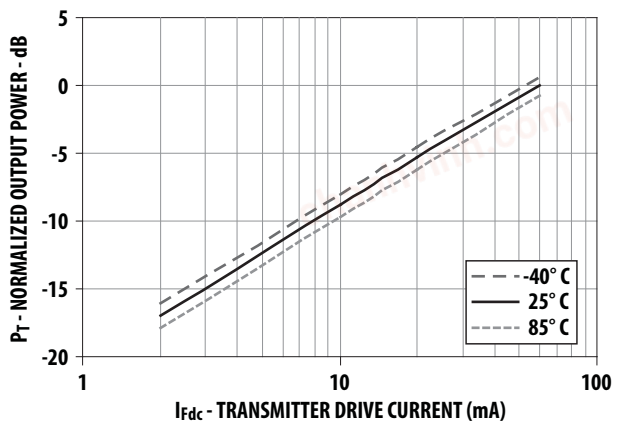

Figure 8. Normalized typical output power vs. drive current

chanhvinh.com

HFBR-25X1ETZ Receiver

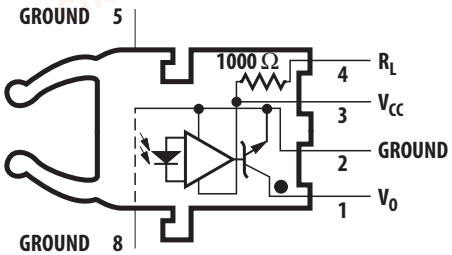

Pin #	Function
1	V_O
2	Ground
3	V_{CC}
4	R_L
5	Ground
8	Ground

Note: Pins 5 and 8 are for mounting and retaining purposes only. Do not electrically connect these pins.

Absolute Maximum Ratings

Parameter		Symbol	Min.	Max.	Units	Reference
Storage Temperature		T_S	–40	+85	° C	
Operating Temperature		T_A	–40	+85	° C	
Lead Soldering Cycle	Temp.			260	° C	Note 1, 3
	Time			10	sec	
Supply Voltage		V_{CC}	–0.5	7	V	Note 2
Output Collector Current		I_{OAV}		25	mA	
Output Collector Power Dissipation		P_{OD}		40	mW	
Output Voltage		V_O	–0.5	18	V	
Pull-up Voltage		V_P	–5	V_{CC}	V	
Fan Out (TTL)		N		5		

Notes:
1. 1.6 mm below seating plane.
2. It is essential that a bypass capacitor 0.1 µF be connected from pin 2 to pin 3 of the receiver. Total lead length between both ends of the capacitor and the pins should not exceed 20 mm.
3. Moisture sensitivity level is MSL-3

Receiver Electrical/Optical Characteristics -40° to 85° C, 4.75 V ≤V_{CC} ≤5.25 V unless otherwise specified.

Parameter	Symbol	Min.	Typ.	Max.	Units	Conditions	Ref.
Input Optical Power Level for Logic "0"	$P_{R(L)}$	–21.6		–9.5	dBm	V_{OL} = 0.5 V I_{OL} = 8 mA	Notes 1, 2, 4
		–21.6		–8.7		V_{OL} = 0.5 V I_{OL} = 8 mA, 25° C	
Input Optical Power Level for Logic "1"	$P_{R(H)}$			–43	dBm	V_{OL} = 5.25 V I_{OH} ≤250 µA	Note 1
High Level Output Current	I_{OH}		5	250	µA	V_O = 18 V, P_R = 0	Note 3
Low Level Output Voltage	V_{OL}		0.4	0.5	V	I_{OL} = 8 mA, P_R = $P_{R(L)MIN}$	Note 3
High Level Supply Current	I_{CCH}		3.5	6.3	mA	V_{CC} = 5.25 V, P_R = 0	Note 3
Low Level Supply Current	I_{CCL}		6.2	10	mA	V_{CC} = 5.25 V P_R = -12.5 dBm	Note 3
Effective Diameter	D		1		mm		
Internal Pull-up Resistor	R_L	680	1000	1700	Ω		

Notes:
1. Optical flux, P (dBm) = 10 Log [P (µW)/1000 µW].
2. Optical power measured at the end of 1 mm diameter POF (NA = 0.5) with a large area detector.
3. R_L is open.
4. Pulsed LED operation at I_F > 80 mA will cause increased link t_{PLH} propagation delay time. This extended t_{PLH} time contributes to increased pulse width distortion of the receiver output signal.

chanhvinh.com

1 MBd Link

(High Performance HFBR-15X2ETZ/25X2ETZ)

System Performance Under recommended operating conditions unless otherwise specified.

	Parameter	Symbol	Min.	Typ.	Max.	Units	Conditions	Ref.
High Performance 1 MBd	Data Rate		dc		1	MBd	BER ≤10^{-9}, PRBS:2^7-1	
	Link Distance	d	37			m	I_{Fdc} = 60 mA	Notes 1,
	(Standard Cable)		58			m	I_{Fdc} = 60 mA, 25° C	3, 4
	Link Distance	d	43			m	I_{Fdc} = 60 mA	Notes 1,
	(Improved Cable)		67			m	I_{Fdc} = 60 mA, 25° C	3, 4
	Propagation	t_{PLH}		100	250	ns	R_L = 560 Ω, C_L = 30 pF	Fig. 10, 12
	Delay	t_{PHL}		80	140	ns	I = 0.5 metre	Notes 2, 4
							P_R = -24 dBm	
	Pulse Width	t_D		20		ns	P_R = -24 dBm	Fig. 10, 11
	Distortion t_{PLH}-t_{PHL}						R_L = 560 Ω, C_L = 30 pF	Note 4

Notes:

1. For I_{FPK} > 80 mA, the duty factor must be such as to keep I_{Fdc} ≤80 mA. In addition, for I_{FPK} > 80 mA, the following rules for pulse width apply:
   I_{FPK} ≤160 mA: Pulse width ≤1 ms
   I_{FPK} > 160 mA: Pulse width ≤1 μS, period ≥20 μS.
2. The propagation delay for one meter of cable is typically 5 ns.
3. Estimated typical link life expectancy at 40° C exceeds 10 years at 60 mA.
4. Pulsed LED operation at I_{FPK} > 80 mA will cause increased link t_{PLH} propagation delay time. This extended t_{PLH} time contributes to increased pulse width distortion of the receiver output signal.

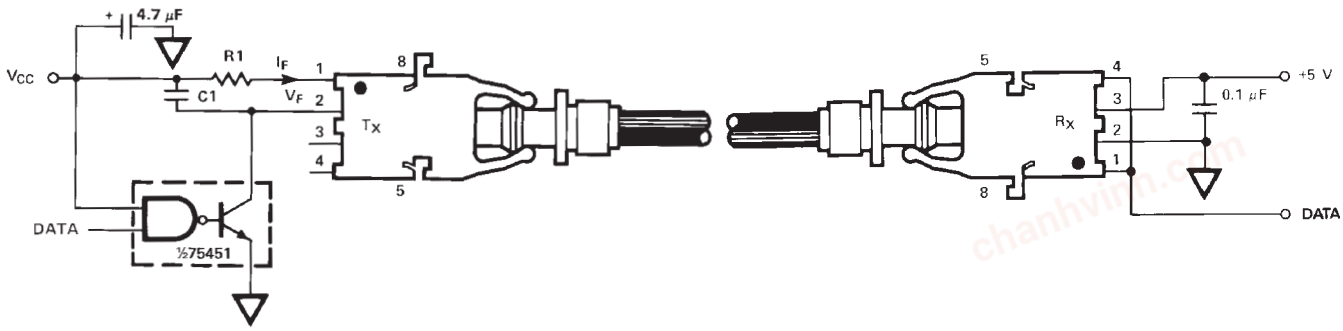

Figure 9. Required 1 MBd interface circuit

The HFBR-25X2ETZ receiver cannot be overdriven when using the required interface circuit shown in Figure 9

chanhvinh.com

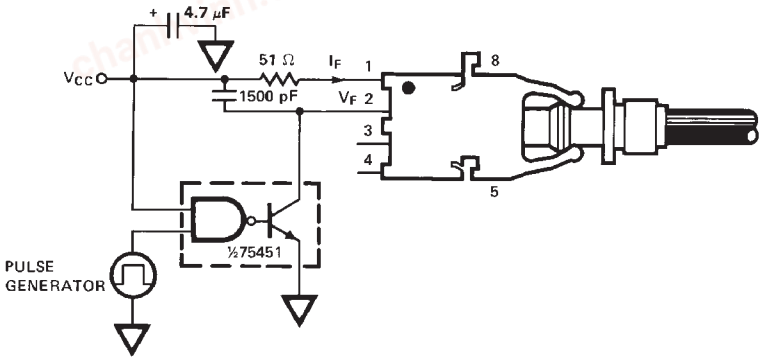

Figure 10. 1 MBd propagation delay test circuit

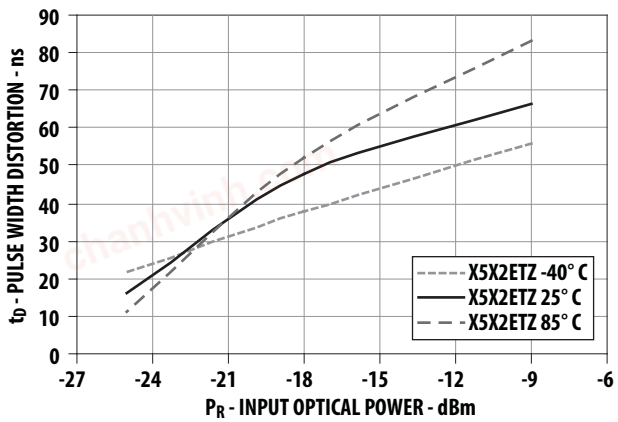

Figure 11. Typical link pulse width distortion vs. optical power

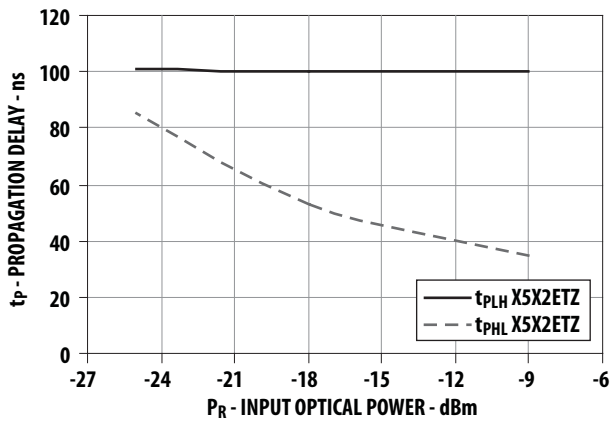

Figure 12. Typical link propagation delay vs. optical power

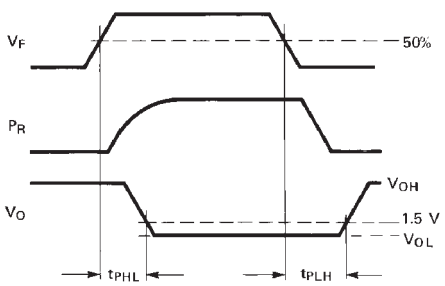

Figure 13. Propagation delay test waveforms

chanhvinh.com

HFBR-15X2ETZ Transmitters

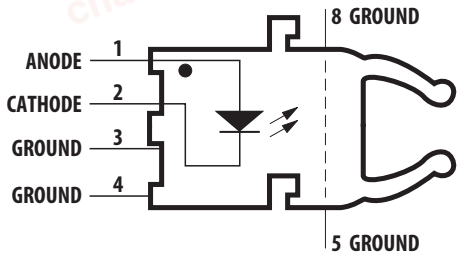

Pin #	Function
1	Anode
2	Cathode
3	Ground
4	Ground
5	Ground
8	Ground

Note: Pins 5 and 8 are for mounting and retaining purposes only. Do not electrically connect these pins.

Absolute Maximum Ratings

Parameter		Symbol	Min.	Max.	Units	Reference
Storage Temperature		T_S	–40	+85	° C	
Operating Temperature		T_A	–40	+85	° C	
Lead Soldering Cycle	Temp.			260	° C	Note 1, 4
	Time			10	sec	
Forward Input Current		I_{FPK}		1000	mA	Note 2, 3
		I_{Fdc}		80		
Reverse Input Voltage		V_{BR}		5	V	

Notes:
1. 1.6 mm below seating plane.
2. Recommended operating range between 10 and 750 mA.
3. 1 µs pulse, 20 µs period.
4. Moisture sensitivity level is MSL-3

All HFBR15XXETZ LED transmitters are classified as IEC 825-1 Accessible Emission Limit (AEL) Class 1 based upon the current proposed draft scheduled to go into effect on January 1, 1997. AEL Class 1 LED devices are considered eye safe. Contact your Avago sales representative for more information.

Transmitter Electrical/Optical Characteristics -40° to 85° C unless otherwise specified.

For forward voltage and output power vs. drive current graphs.

Parameter	Symbol	Min.	Typ.	Max.	Units	Conditions	Ref.
Transmitter Output Optical Power	P_T	–13.9 –11.2		–4.0 –5.1	dBm	I_{Fdc} = 60 mA I_{Fdc} = 60 mA, 25° C	Note 1
Output Optical Power Temperature Coefficient	$\Delta P_T/\Delta T$		–0.85		%/° C		
Peak Emission Wavelength	λ_{PK}		660		nm		
Forward Voltage	V_F	1.43	1.67	2.05	V	I_{Fdc} = 60 mA	
Forward Voltage Temperature Coefficient	$\Delta V_F/\Delta T$		–1.37		mV/° C		Fig. 09
Effective Diameter	D_T		1		mm		
Reverse Input Breakdown Voltage	V_{BR}	5.0	11.0		V	I_{Fdc} = 10 µA, T_A = 25° C	
Diode Capacitance	C_O		86		pF	V_F = 0, f = 1 MHz	
Rise Time	t_r		20		ns	10% to 90%,	Note 2
Fall Time	t_f		20		ns	I_F = 60 mA	

Note:
1. Optical power measured at the end of 0.5 m of 1 mm diameter POF (NA = 0.5) with a large area detector.
2. Rise and fall times are measured with a voltage pulse driving the transmitter driver IC (75451). A wide bandwidth optical to electrical waveform analyzer, terminated to a 50 Ω input of a wide bandwidth oscilloscope, is used for this response time measurement.

chanhvinh.com

HFBR-25X2ETZ Receivers

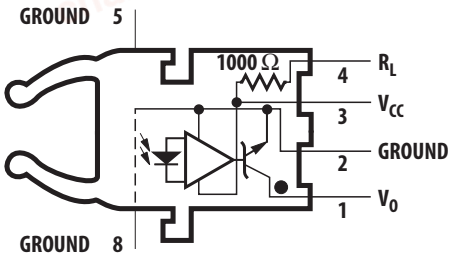

Pin #	Function
1	V_O
2	Ground
3	V_{CC}
4	R_L
5	Ground
8	Ground

Note: Pins 5 and 8 are for mounting and retaining purposes only. Do not electrically connect these pins.

Absolute Maximum Ratings

Parameter		Symbol	Min.	Max.	Units	Reference
Storage Temperature		T_S	–40	+85	° C	
Operating Temperature		T_A	–40	+85	° C	
Lead Soldering Cycle	Temp.			260	° C	Note 1, 3
	Time			10	sec	
Supply Voltage		V_{CC}	–0.5	7	V	Note 2
Output Collector Current		I_{OAV}		25	mA	
Output Collector Power Dissipation		P_{OD}		40	mW	
Output Voltage		V_O	–0.5	18	V	
Pull-up Voltage		V_P	–5	V_{CC}	V	
Fan Out (TTL)		N		5		

Notes:
1. 1.6 mm below seating plane.
2. It is essential that a bypass capacitor 0.1 µF be connected from pin 2 to pin 3 of the receiver. Total lead length between both ends of the capacitor and the pins should not exceed 20 mm.
3. Moisture sensitivity level is MSL-3

Receiver Electrical/Optical Characteristics -40° to 85° C, 4.75 V ≤V_{CC} ≤5.25 V unless otherwise specified.

Parameter	Symbol	Min.	Typ.	Max.	Units	Conditions	Ref.
Receiver Optical Input Power Level Logic 0	$P_{R(L)}$	–24		-9.5	dBm	V_{OL} ≤ 0.5 V I_{OL} = 8 mA	Notes 1, 2, 3
Optical Input Power Level Logic 1	$P_{R(H)}$			-43	dBm	V_{OH} = 5.25 V I_{OH} = ≤250 µA	Note 4
High Level Output Current	I_{OH}		5	250	µA	V_O = 18 V, P_R = 0	Note 5
Low Level Output Voltage	V_{OL}		0.4	0.5	V	I_{OL} = 8 mA $P_R = P_{R(L)MIN}$	Note 5
High Level Supply Current	I_{CCH}		3.5	6.3	mA	V_{CC} = 5.25 V, P_R = 0	Note 5
Low Level Supply Current	I_{CCL}		6.2	10	mA	V_{CC} = 5.25 V, P_R = -12.5 dBm	Note 5
Effective Diameter	D		1		mm		
Internal Pull-up Resistor	R_L	680	1000	1700	Ω		

Notes:
1. Optical power measured at the end of 1 mm diameter POF (NA = 0.5) with a large area detector.
2. Pulsed LED operation at I_F > 80 mA will cause increased link t_{PLH} propagation delay time. This extended t_{PLH} time contributes to increased pulse width distortion of the receiver output signal.
3. The LED drive circuit of Figure 11 is required for 1 MBd operation of the HFBR-25X2ETZ.
4. Optical flux, P (dBm) = 10 Log [P(µW)/1000 µW].
5. R_L is open.

chanhvinh.com

For product information and a complete list of distributors, please go to our website: **www.avagotech.com**

Avago, Avago Technologies, and the A logo are trademarks of Avago Technologies in the United States and other countries.
Data subject to change. Copyright © 2005-2012 Avago Technologies. All rights reserved.
AV02-3283EN - February 23, 2012