chanhvinh.com

# HDSP-335x Series, HDSP-555x Series, HDSP-751x Series, HDSP-A10x Series, HDSP-A80x Series, HDSP-A90x Series, HDSP-E10x Series, HDSP-F10x Series, HDSP-G10x Series, HDSP-H10x Series, HDSP-K12x, HDSP-N10x Series

Low Current Seven Segment Displays

## Data Sheet



### Description

These low current seven segment displays are designed for applications requiring low power consumption. They are tested and selected for their excellent low current characteristics to ensure that the segments are matched at low currents. Drive currents as low as 1 mA per segment are available.

Pin for pin equivalent displays are also available in a standard current or high light ambient design. The standard current displays are available in all colors and are ideal for most applications. The high light ambient displays are ideal for sunlight ambients or long string lengths. For additional information see the 7.6 mm Micro Bright Seven Segment Displays, 10 mm Seven Segment Displays, 7.6 mm/10.9 mm Seven Segment Displays, 14.2 mm Seven Segment Displays, 20 mm Seven Segment Displays, or High Light Ambient Seven Segment Displays data sheets.

### Features

- Low Power Consumption
- Industry Standard Size
- Industry Standard Pinout
- Choice of Character Size
  - 7.6 mm (0.30 in), 10 mm (0.40 in), 10.9 mm (0.43 in), 14.2 mm (0.56 in), 20 mm (0.80 in)
- Choice of Colors
  - AlGaAs Red, High Efficiency Red (HER), Yellow, Green
- Excellent Appearance
  - Evenly Lighted Segments
  - ±50° Viewing Angle
- Design Flexibility
  - Common Anode or Common Cathode
  - Single and Dual Digit
  - Left and Right Hand Decimal Points
  - ±1. Overflow Character
- Categorized for Luminous Intensity
  - Yellow and Green Categorized for Color Use of Like Categories Yields a Uniform Display
- Excellent for Long Digit String Multiplexing

chanhvinh.com

## Devices

| AlGaAs | HER | Yellow | Green | Description | Package Drawing |
|---|---|---|---|---|---|
| HDSP-A101 | HDSP-7511 | HDSP-A801 | HDSP-A901 | 7.6 mm Common Anode Right Hand Decimal | A |
| HDSP-A103 | HDSP-7513 | HDSP-A803 | HDSP-A903 | 7.6 mm Common Cathode Right Hand Decimal | B |
| HDSP-A107 | HDSP-7517 | HDSP-A807 | HDSP-A907 | 7.6 mm Common Anode ±1. Overflow | C |
| HDSP-A108 | | | HDSP-A908 | 7.6 mm Common Cathode ±1. Overflow | D |
| HDSP-F101 | | | | 10 mm Common Anode Right Hand Decimal | E |
| HDSP-F103 | | | | 10 mm Common Cathode Right Hand Decimal | F |
| HDSP-F107 | | | | 10 mm Common Anode ±1. Overflow | G |
| HDSP-F108 | | | | 10 mm Common Cathode ±1. Overflow | H |
| HDSP-E100 | | | | 10.9 mm Common Anode Left Hand Decimal | I |
| HDSP-E101 | HDSP-3351 | | | 10.9 mm Common Anode Right Hand Decimal | J |
| HDSP-E103 | HDSP-3353 | | | 10.9 mm Common Cathode Right Hand Decimal | K |
| | HDSP-3356 | | | 10.9 mm Universal ±1. Overflow[1] | L |
| HDSP-H101 | HDSP-5551 | | | 14.2 mm Common Anode Right Hand Decimal | M |
| HDSP-H103 | HDSP-5553 | | | 14.2 mm Common Cathode Right Hand Decimal | N |
| HDSP-H107 | HDSP-5557 | | | 14.2 mm Common Anode ±1. Overflow | O |
| HDSP-H108 | HDSP-5558 | | | 14.2 mm Common Cathode ±1. Overflow | P |
| HDSP-K121 | | | | 14.2 mm Two Digit Common Anode Right Hand Decimal | R |
| HDSP-K123 | | | | 14.2 mm Two Digit Common Cathode Right Hand Decimal | S |
| HDSP-N101 | | | | 20 mm Common Anode Right Hand Decimal | T |
| HDSP-N103 | | | | 20 mm Common Cathode Right Hand Decimal | U |
| HDSP-N105 | | | | 20 mm Common Cathode Left Hand Decimal | V |

Note:
1. Universal pinout brings the anode and cathode of each segment's LED out to separate pins. See internal diagrams L or W.

chanhvinh.com

## Part Numbering System

5082 – X XX X – X X X XX
HDSP – X XX X – X X X XX

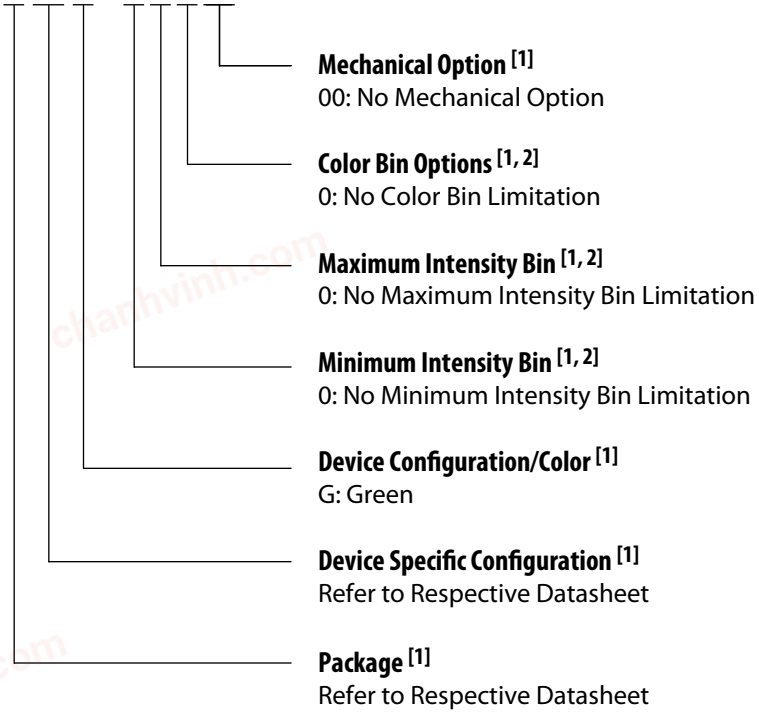

**Mechanical Option** [1]
00: No Mechanical Option

**Color Bin Options** [1, 2]
0: No Color Bin Limitation

**Maximum Intensity Bin** [1, 2]
0: No Maximum Intensity Bin Limitation

**Minimum Intensity Bin** [1, 2]
0: No Minimum Intensity Bin Limitation

**Device Configuration/Color** [1]
G: Green

**Device Specific Configuration** [1]
Refer to Respective Datasheet

**Package** [1]
Refer to Respective Datasheet

Notes:
1. For codes not listed in the figure above, please refer to the respective datasheet or contact your nearest Avago representative for details.
2. Bin options refer to shippable bins for a part number. Color and Intensity Bins are typically restricted to 1 bin per tube (exceptions may apply). Please refer to respective datasheet for specific bin limit information.

chanhvinh.com

## Package Dimensions

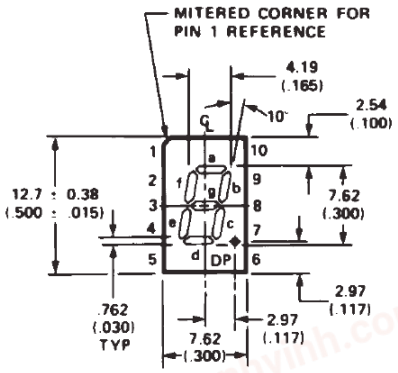


A, B

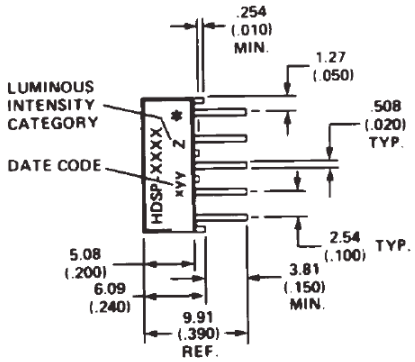


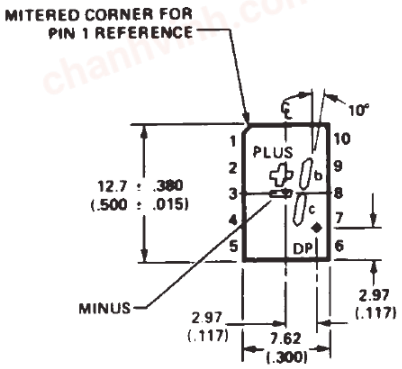


C, D

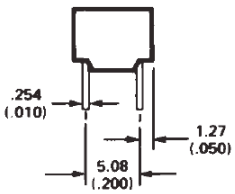


A, B, C, D

*** Side View of package indicates Country of Origin**

| | FUNCTION | | | |
|---|---|---|---|---|
| **Pin** | **A** | **B** | **C** | **D** |
| 1 | ANODE[3] | CATHODE[4] | ANODE[3] | CATHODE[4] |
| 2 | CATHODE f | ANODE f | CATHODE PLUS | ANODE PLUS |
| 3 | CATHODE g | ANODE g | CATHODE MINUS | ANODE MINUS |
| 4 | CATHODE e | ANODE e | NC | NC |
| 5 | CATHODE d | ANODE d | NC | NC |
| 6 | ANODE[3] | CATHODE[4] | ANODE[3] | CATHODE[4] |
| 7 | CATHODE DP | ANODE DP | CATHODE DP | ANODE DP |
| 8 | CATHODE c | ANODE c | CATHODE c | ANODE c |
| 9 | CATHODE b | ANODE b | CATHODE b | ANODE b |
| 10 | CATHODE a | ANODE a | NC | NC |

Notes:
1. All dimensions in millimetres (inches).
2. All untoleranced dimensions are for reference only.
3. Redundant anodes.
4. Redundant cathodes.

chanhvinh.com

## Package Dimensions (cont.)

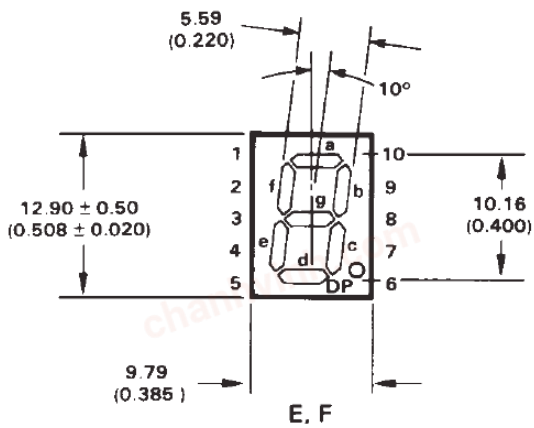


E, F

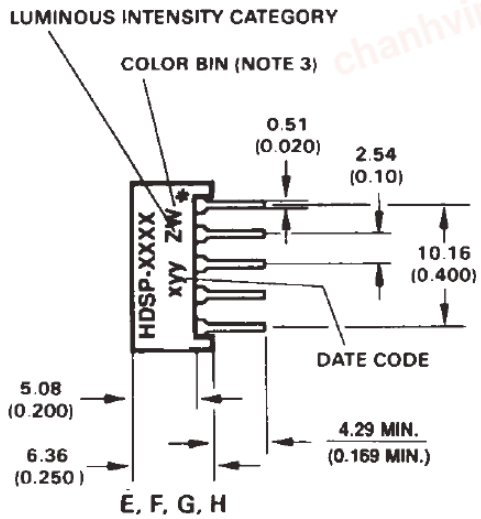


E, F, G, H

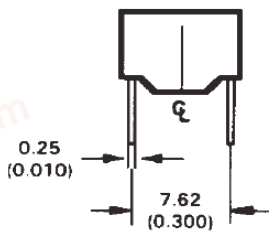


E, F, G, H

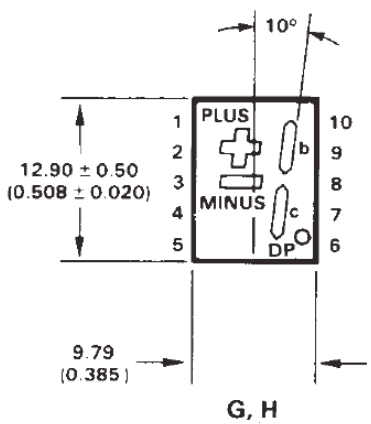


G, H

*** Side View of package indicates Country of Origin**

| | FUNCTION | | | |
|---|---|---|---|---|
| **Pin** | **E** | **F** | **G** | **H** |
| 1 | ANODE[3] | CATHODE[4] | ANODE[3] | CATHODE[4] |
| 2 | CATHODE f | ANODE f | CATHODE PLUS | ANODE PLUS |
| 3 | CATHODE g | ANODE g | CATHODE MINUS | ANODE MINUS |
| 4 | CATHODE e | ANODE e | NC | NC |
| 5 | CATHODE d | ANODE d | NC | NC |
| 6 | ANODE[3] | CATHODE[4] | ANODE[3] | CATHODE[4] |
| 7 | CATHODE DP | ANODE DP | CATHODE DP | ANODE DP |
| 8 | CATHODE c | ANODE c | CATHODE c | ANODE c |
| 9 | CATHODE b | ANODE b | CATHODE b | ANODE b |
| 10 | CATHODE a | ANODE a | NC | NC |

Notes:
1. All dimensions in millimetres (inches).
2. All untoleranced dimensions are for reference only.
3. Redundant anodes.
4. Redundant cathodes.

chanhvinh.com

## Package Dimensions (cont.)

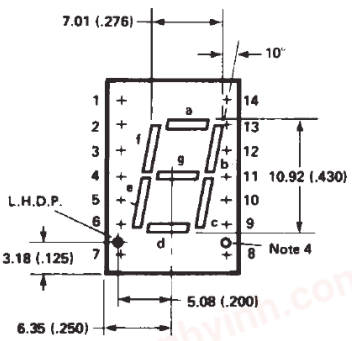


I

FRONT VIEW

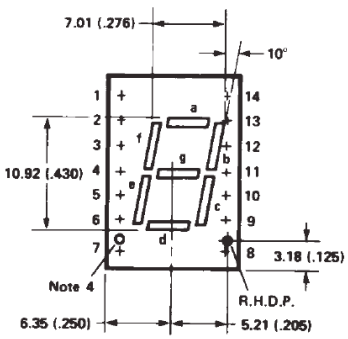


J, K

FRONT VIEW

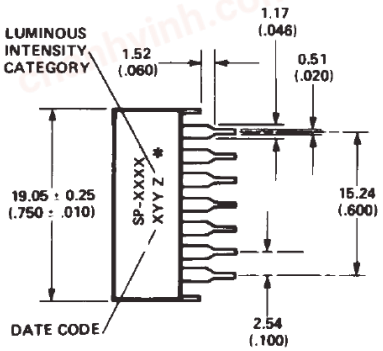


SIDE VIEW

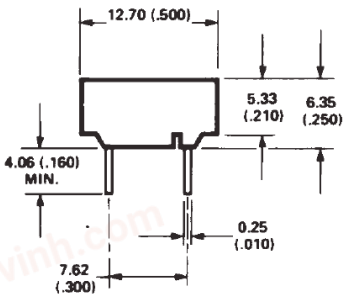


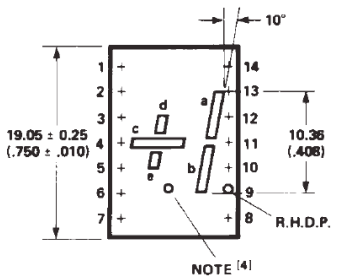


L

*Side View of package indicates Country of Origin

| | FUNCTION | | | |
|---|---|---|---|---|
| Pin | I | J | K | L |
| 1 | CATHODE a | CATHODE a | ANODE a | CATHODE d |
| 2 | CATHODE f | CATHODE f | ANODE f | ANODE d |
| 3 | ANODE[3] | ANODE[3] | CATHODE[6] NO | NO PIN |
| 4 | NO PIN | NO PIN | PIN | CATHODE c |
| 5 | NO PIN | NO PIN | NO PIN | CATHODE e |
| 6 | CATHODE dp | NO CONN.[5] | NO CONN.[5] | ANODE e |
| 7 | CATHODE e | CATHODE e | ANODE e | ANODE c |
| 8 | CATHODE d | CATHODE d | ANODE d | ANODE dp |
| 9 | NO CONN.[5] | CATHODE dp | ANODE dp | CATHODE dp |
| 10 | CATHODE c | CATHODE c | ANODE c | CATHODE b |
| 11 | CATHODE g | CATHODE g | ANODE g | CATHODE a |
| 12 | NO PIN | NO PIN | NO PIN | NO PIN |
| 13 | CATHODE b | CATHODE b | ANODE b | ANODE a |
| 14 | ANODE[3] | ANODE[3] | CATHODE[6] | ANODE b |

Notes:
1. All dimensions in millimetres (inches).
2. All untoleranced dimensions are for reference only.
3. Redundant anodes.
4. Unused dp position.
5. See internal circuit diagram.
6. Redundant cathodes.
7. See part number table for L.H.D.P. and R.H.D.P. designation.

chanhvinh.com

## Package Dimensions (cont.)

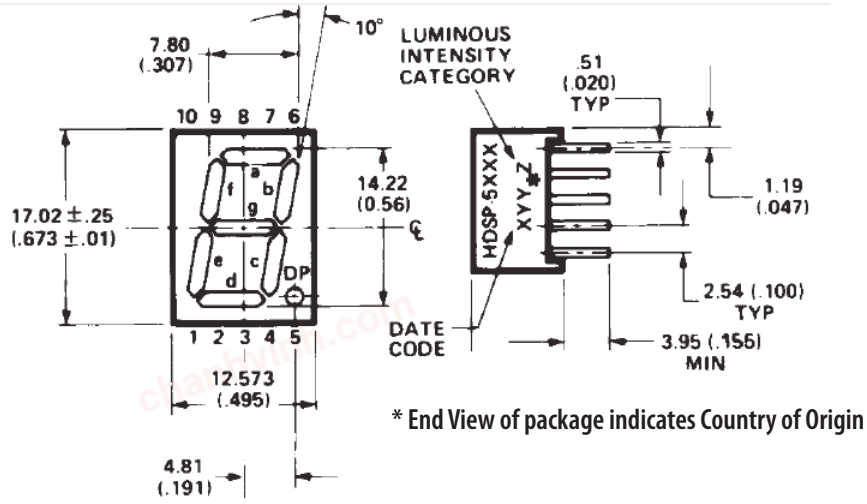


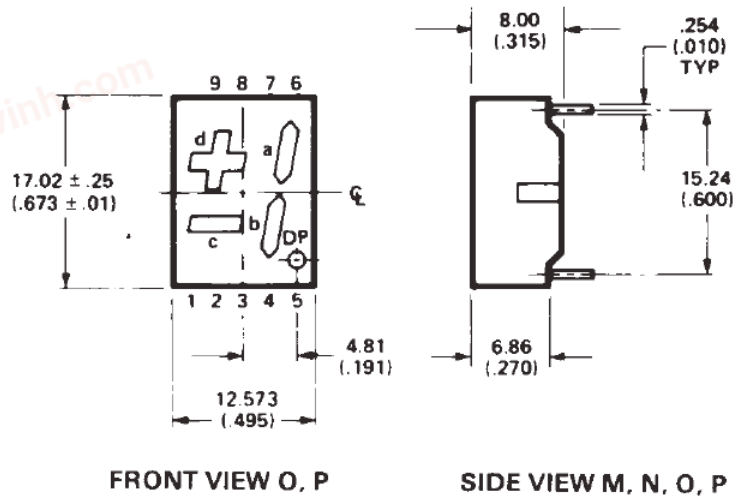


| | FUNCTION | | | |
|---|---|---|---|---|
| Pin | M | N | O | P |
| 1 | CATHODE e | ANODE e | CATHODE c | ANODE c |
| 2 | CATHODE d | ANODE d | ANODE c, d | CATHODE c, d |
| 3 | ANODE[3] | CATHODE[4] | CATHODE b | ANODE b |
| 4 | CATHODE c | ANODE c | ANODE a, b, DP | CATHODE a, b, DP |
| 5 | CATHODE DP | ANODE DP | CATHODE DP | ANODE DP |
| 6 | CATHODE b | ANODE b | CATHODE a | ANODE a |
| 7 | CATHODE a | ANODE a | ANODE a, b, DP | CATHODE a, b, DP |
| 8 | ANODE[3] | CATHODE[4] | ANODE c, d | CATHODE c, d |
| 9 | CATHODE f | ANODE f | CATHODE d | ANODE d |
| 10 | CATHODE g | ANODE g | NO PIN | NO PIN |

Notes:
1. All dimensions in millimetres (inches).
2. All untoleranced dimensions are for reference only.
3. Redundant anodes.
4. Redundant cathodes.

chanhvinh.com

## Package Dimensions (cont.)

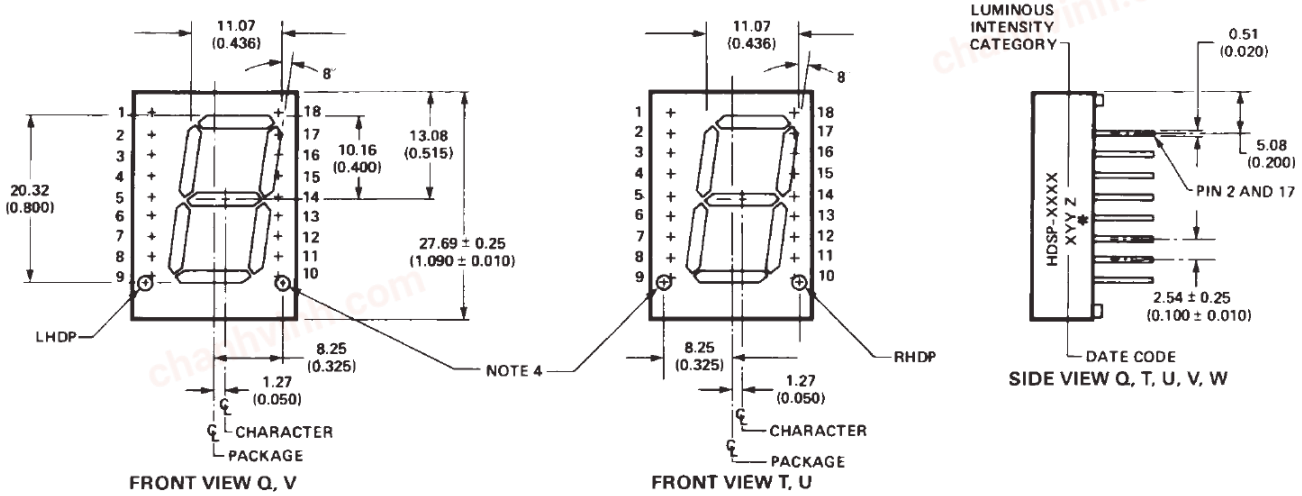


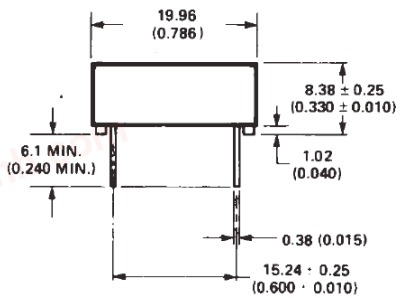


END VIEW Q, T, U, V, W

*** The Side View of package indicates Country of Origin**

| | FUNCTION | | |
|---|---|---|---|
| **Pin** | **T** | **U** | **V** |
| 1 | NO PIN | NO PIN | NO PIN |
| 2 | CATHODE a | ANODE a | ANODE a |
| 3 | CATHODE f | ANODE f | ANODE f |
| 4 | ANODE[3] | CATHODE[6] | CATHODE[6] |
| 5 | CATHODE e | ANODE e | ANODE e |
| 6 | ANODE[3] | CATHODE[6] | CATHODE[6] |
| 7 | NO CONNECT | NO CONNECT | ANODE dp |
| 8 | NO PIN | NO PIN | NO PIN |
| 9 | NO PIN | NO PIN | NO PIN |
| 10 | CATHODE dp | ANODE dp | NO PIN |
| 11 | CATHODE d | ANODE d | ANODE d |
| 12 | ANODE[3] | CATHODE[6] | CATHODE[6] |
| 13 | CATHODE c | ANODE c | ANODE c |
| 14 | CATHODE g | ANODE g | ANODE g |
| 15 | CATHODE b | ANODE b | ANODE b |
| 16 | NO PIN | NO PIN | NO PIN |
| 17 | ANODE[3] | CATHODE[6] | CATHODE[6] |
| 18 | NO PIN | NO PIN | NO PIN |

Notes:
1. All dimensions in millimetres (inches).
2. All untoleranced dimensions are for reference only.
3. Redundant anodes.
4. Unused dp position.
5. See internal circuit diagram.
6. Redundant cathodes.
7. See part number table for L.H.D.P. and R.H.D.P. designation.

chanhvinh.com

## Package Dimensions (cont.)

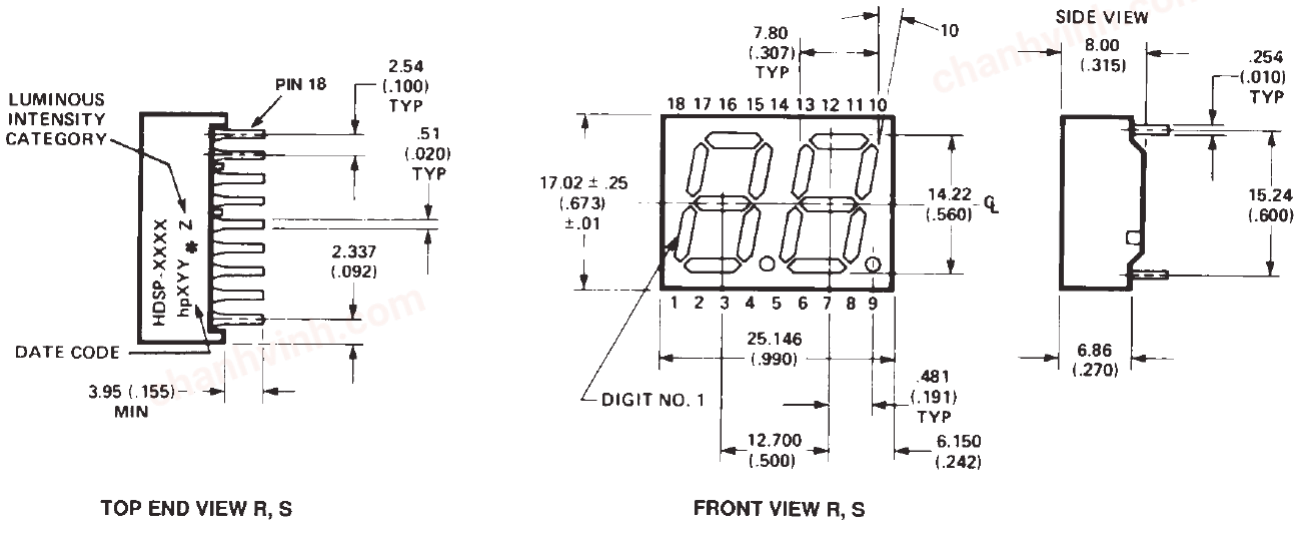


*** The Side View of package indicates Country of Origin**

| | FUNCTION | |
|---|---|---|
| **Pin** | **R** | **S** |
| 1 | E CATHODE NO. 1 | E ANODE NO. 1 |
| 2 | D CATHODE NO. 1 | D ANODE NO. 1 |
| 3 | C CATHODE NO. 1 | C ANODE NO. 1 |
| 4 | DP CATHODE NO. 1 | DP ANODE NO. 1 |
| 5 | E CATHODE NO. 2 | E ANODE NO. 2 |
| 6 | D CATHODE NO. 2 | D ANODE NO. 2 |
| 7 | G CATHODE NO. 2 | G ANODE NO. 2 |
| 8 | C CATHODE NO. 2 | C ANODE NO. 2 |
| 9 | DP CATHODE NO. 2 | DP ANODE NO. 2 |
| 10 | B CATHODE NO. 2 | B ANODE NO. 2 |
| 11 | A CATHODE NO. 2 | A ANODE NO. 2 |
| 12 | F CATHODE NO. 2 | F ANODE NO. 2 |
| 13 | DIGIT NO. 2 ANODE | DIGIT NO. 2 CATHODE |
| 14 | DIGIT NO. 1 ANODE | DIGIT NO. 1 CATHODE |
| 15 | B CATHODE NO. 1 | B ANODE NO. 1 |
| 16 | A CATHODE NO. 1 | A ANODE NO. 1 |
| 17 | G CATHODE NO. 1 | G ANODE NO. 1 |
| 18 | F CATHODE NO. 1 | F ANODE NO. 1 |

Notes:
1. All dimensions in millimetres (inches).
2. All untoleranced dimensions are for reference only.
3. Where applicable.

## Internal Circuit Diagram

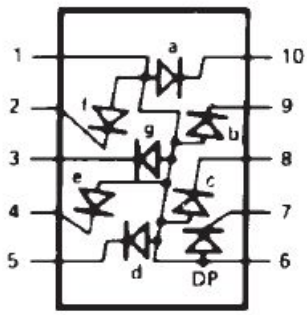


A, E

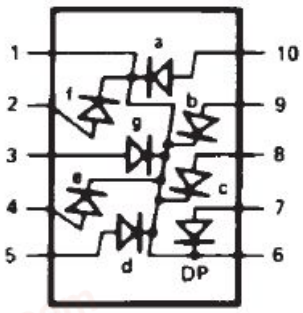


B, F

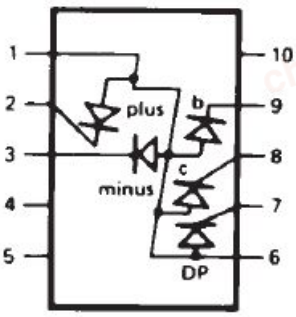


C, G

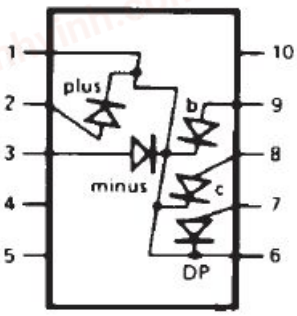


D, H

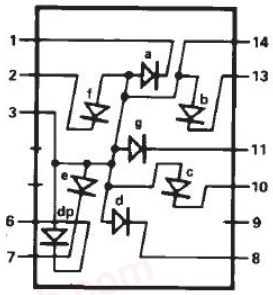


I

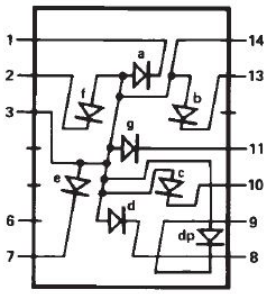


J

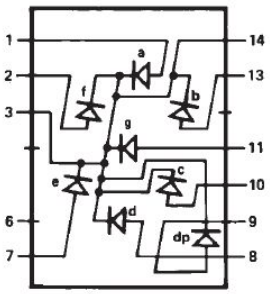


K

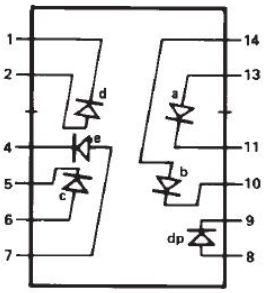


L

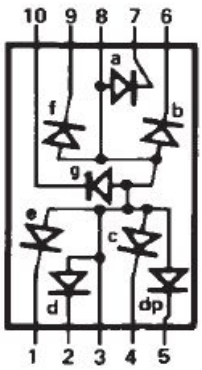


M

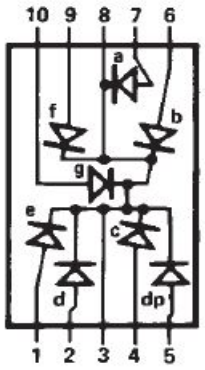


N

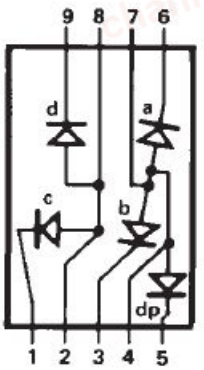


O

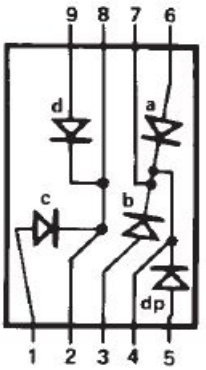


P

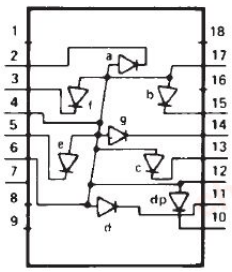


T

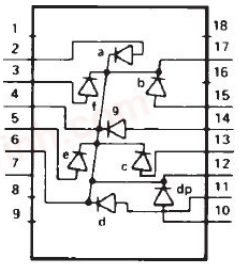


U

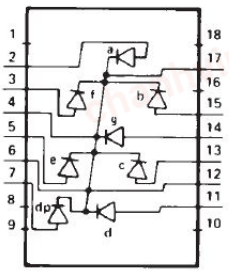


V

chanhvinh.com

## Internal Circuit Diagram (cont.)

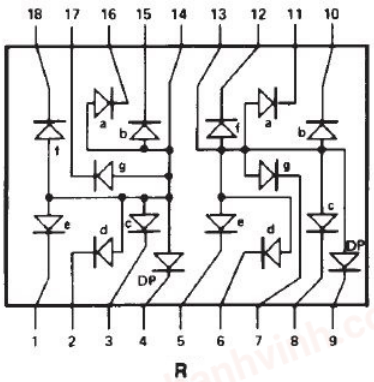


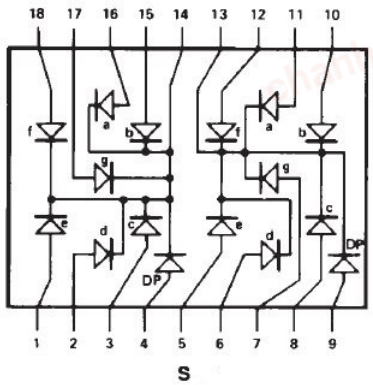


## Absolute Maximum Ratings

| Description | AlGaAs Red - HDSP-A10X/ E10X/H10X/K12X/ N10X/F10X/G10X Series | HER HDSP-751X/ 335X/555X/K70X Series | Yellow HDSP-A80X Series | Green HDSP-A90X Series | Units |
|---|---|---|---|---|---|
| Average Power per Segment or DP | 37 | 52 | | 64 | mW |
| Peak Forward Current per Segment or DP | | 45 | | | mA |
| DC Forward Current per Segment or DP | 15[1] | 15[2] | | | mA |
| Operating Temperature Range | –20 to +100[9] | –40 to +100 | | | °C |
| Storage Temperature Range | | –55 to +100 | | | °C |
| Reverse Voltage* per segment or DP | | 3.0 | | | V |
| Wave Soldering Temperature for 3 Seconds (1.60 mm [0.063 in.] below seating body) | | 250 | | | °C |

* Reverse Voltage is for LED testing purposes and is not recommended to be used as an application condition.

Notes:
1. Derate above 91°C at 0.53 mA/°C.
2. Derate HER/Yellow above 80°C at 0.38 mA/°C and Green above 71°C at 0.31 mA/°C

chanhvinh.com

## Electrical/Optical Characteristics at $T_A = 25°C$

### AlGaAs Red

| Device Series | Parameter | Symbol | Min. | Typ. | Max. | Units | Test Conditions |
|---|---|---|---|---|---|---|---|
| HDSP-A10x | Luminous Intensity/Segment[1,2] (Digit Average) | $I_V$ | 315 | 600 | | µcd | $I_F$ = 1 mA |
| | | | | 3600 | | | $I_F$ = 5 mA |
| HDSP-F10x | | | 330 | 650 | | | $I_F$ = 1 mA |
| | | | | 3900 | | | $I_F$ = 5 mA |
| HDSP-E10x | | | 390 | 650 | | | $I_F$ = 1 mA |
| | | | | 3900 | | | $I_F$ = 5 mA |
| HDSP-H10x, HDSP-K12x | | | 400 | 700 | | | $I_F$ = 1 mA |
| | | | | 4200 | | | $I_F$ = 5 mA |
| HDSP-N10x | | | 270 | 590 | | | $I_F$ = 1 mA |
| | | | | 3500 | | | $I_F$ = 5 mA |
| All Devices | Forward Voltage/Segment or DP | $V_F$ | | 1.6 | | V | $I_F$ = 1 mA |
| | | | | 1.7 | | | $I_F$ = 5 mA |
| | | | | 1.8 | 2.2 | | $I_F$ = 20 mA Pk |
| | Peak Wavelength | $\lambda_{PEAK}$ | | 645 | | nm | |
| | Dominant Wavelength[3] | $\lambda_d$ | | 637 | | nm | |
| | Reverse Voltage/Segment or DP[4] | $V_R$ | 3.0 | 15 | | V | $I_R$ = 100 µA |
| | Temperature Coefficient of $V_F$/Segment or DP | $\Delta V_F$/°C | | -2 mV | | mV/°C | |
| HDSP-A10x | Thermal Resistance LED Junction-to-Pin | $R\theta_{J\text{-}PIN}$ | | 255 | | °C/W/Seg | |
| HDSP-F10x | | | | 320 | | | |
| HDSP-E10x | | | | 340 | | | |
| HDSP-H10x, HDSP-K12x | | | | 400 | | | |
| HDSP-N10x | | | | 430 | | | |

### High Efficiency Red

| Device Series | Parameter | Symbol | Min. | Typ. | Max. | Units | Test Conditions |
|---|---|---|---|---|---|---|---|
| HDSP-751x | Luminous Intensity/Segment[1,2,6] (Digit Average) | $I_V$ | 160 | 270 | | µcd | $I_F$ = 2 mA |
| | | | | 1050 | | | $I_F$ = 5 mA |
| HDSP-335x, HDSP-555x | | | 200 | 300 | | | $I_F$ = 2 mA |
| | | | | 1200 | | | $I_F$ = 5 mA |
| | | | 270 | 370 | | | $I_F$ = 2 mA |
| | | | | 1480 | | | $I_F$ = 5 mA |
| All Devices | Forward Voltage/Segment or DP | $V_F$ | | 1.6 | | V | $I_F$ = 2 mA |
| | | | | 1.7 | | | $I_F$ = 5 mA |
| | | | | 2.1 | 2.5 | | $I_F$ = 20 mA Pk |
| | Peak Wavelength | $\lambda_{PEAK}$ | | 635 | | nm | |
| | Dominant Wavelength[3] | $\lambda_d$ | | 626 | | nm | |
| | Reverse Voltage/Segment or DP[4] | $V_R$ | 3.0 | 30 | | V | $I_R$ = 100 µA |
| | Temperature Coefficient of $V_F$/Segment or DP | $\Delta V_F$/°C | | -2 | | mV/°C | |
| HDSP-751x | Thermal Resistance LED Junction-to-Pin | $R\theta_{J\text{-}PIN}$ | | 200 | | °C/W | |
| HDSP-335x | | | | 280 | | | |
| HDSP-555x | | | | 345 | | | |

chanhvinh.com

## Yellow

| Device Series | Parameter | Symbol | Min. | Typ. | Max. | Units | Test Conditions |
|---|---|---|---|---|---|---|---|
| HDSP-A80x | Luminous Intensity/Segment[1,2] (Digit Average) | $I_V$ | 250 | 420 | | µcd | $I_F$ = 4 mA |
| | | | | 1300 | | | $I_F$ = 10 mA |
| | Forward Voltage/Segment or DP | $V_F$ | | 1.7 | | V | $I_F$ = 4 mA |
| | | | | 1.8 | | | $I_F$ = 5 mA |
| | | | | 2.1 | 2.5 | | $I_F$ = 20 mA Pk |
| | Peak Wavelength | $\lambda_{PEAK}$ | | 583 | | nm | |
| | Dominant Wavelength[3,5] | $\lambda_d$ | 581.5 | 585 | 592.5 | nm | |
| | Reverse Voltage/Segment or DP[4] | $V_R$ | 3.0 | 30 | | V | $I_R$ = 100 µA |
| | Temperature Coefficient of $V_F$/ Segment or DP | $\Delta V_F$/°C | | -2 | | mV/°C | |
| | Thermal Resistance LED Junction-to-Pin | $R\theta_{J\text{-}PIN}$ | | 200 | | °C/W | |

## Green

| Device Series | Parameter | Symbol | Min. | Typ. | Max. | Units | Test Conditions |
|---|---|---|---|---|---|---|---|
| HDSP-A90x | Luminous Intensity/Segment[1,2] (Digit Average) | $I_V$ | 250 | 475 | | µcd | $I_F$ = 4 mA |
| | | | | 1500 | | | $I_F$ = 10 mA |
| | Forward Voltage/Segment or DP | $V_F$ | | 1.9 | | V | $I_F$ = 4 mA |
| | | | | 2.0 | | | $I_F$ = 10 mA |
| | | | | 2.1 | 2.5 | | $I_F$ = 20 mA Pk |
| | Peak Wavelength | $\lambda_{PEAK}$ | | 566 | | nm | |
| | Dominant Wavelength[3,5] | $\lambda_d$ | | 571 | 577 | nm | |
| | Reverse Voltage/Segment or DP[4] | $V_R$ | 3.0 | 30 | | V | $I_R$ = 100 µA |
| | Temperature Coefficient of $V_F$/ Segment or DP | $\Delta V_F$/°C | | -2 | | mV/°C | |
| | Thermal Resistance LED Junction-to-Pin | $R\theta_{J\text{-}PIN}$ | | 200 | | °C/W | |

Notes:
1. Device case temperature is 25°C prior to the intensity measurement.
2. The digits are categorized for luminous intensity. The intensity category is designated by a letter on the side of the package.
3. The dominant wavelength, ld, is derived from the CIE chromaticity diagram and is the single wavelength which defines the color of the device.
4. Typical specification for reference only. Do not exceed absolute maximum ratings.
5. The yellow (HDSP-A800) and Green (HDSP-A900) displays are categorized for dominant wavelength. The category is designated by a number adjacent to the luminous intensity category letter.

chanhvinh.com

## AlGaAs Red

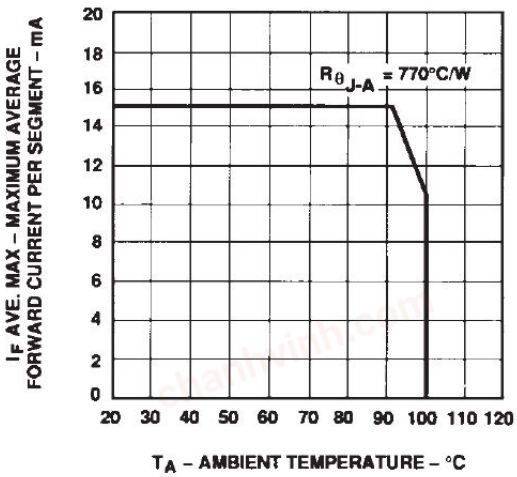


Figure 1. Maximum Allowable Average or DC Current vs. Ambient Temperature.

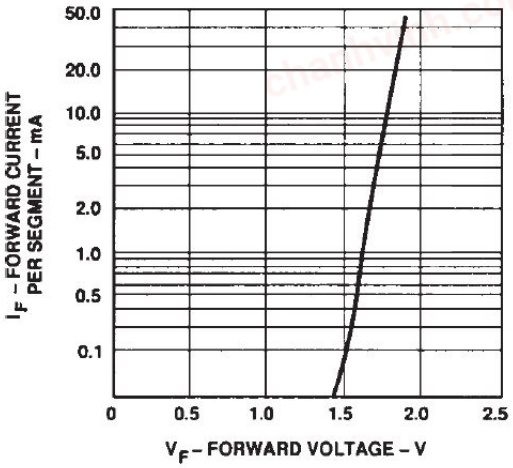


Figure 2. Forward Current vs. Forward Voltage.

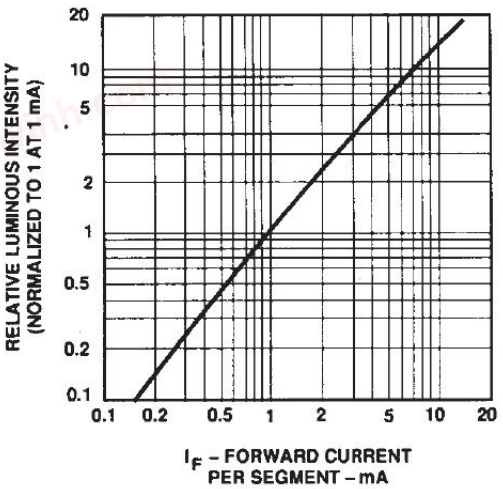


Figure 3. Relative Luminous Intensity vs. DC Forward Current.

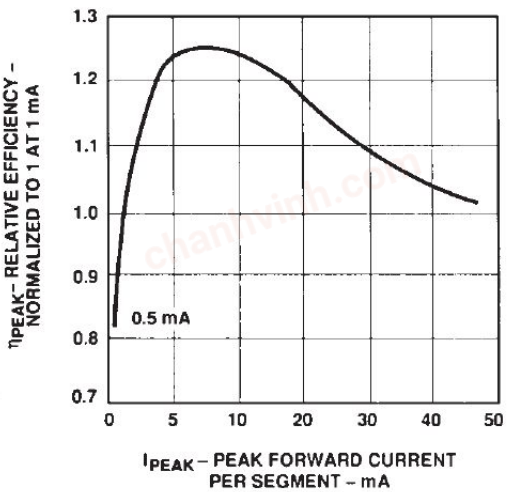


Figure 4. Relative Efficiency (Luminous Intensity per Unit Current) vs. Peak Current.

chanhvinh.com

## HER, Yellow, Green

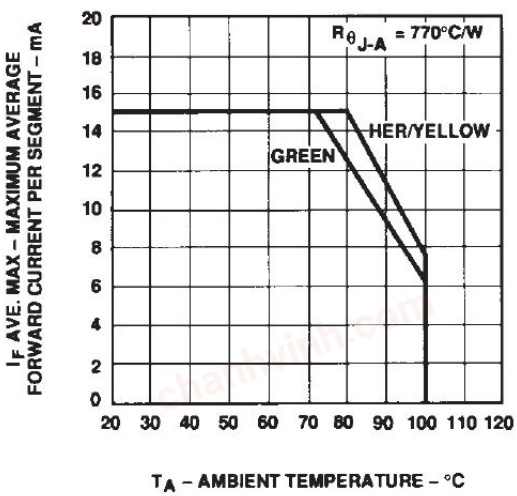


Figure 5. Maximum Allowable Average or DC Current vs. Ambient Temperature.

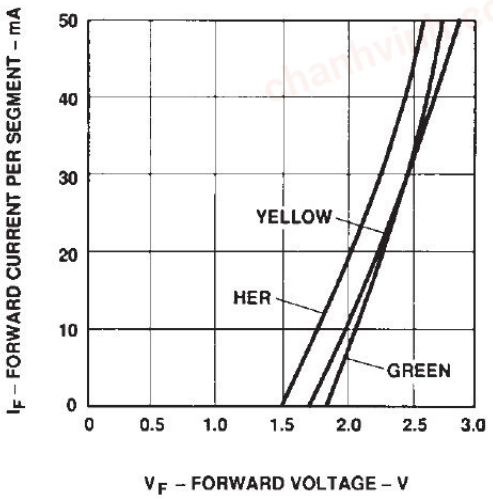


Figure 6. Forward Current vs. Forward Voltage.

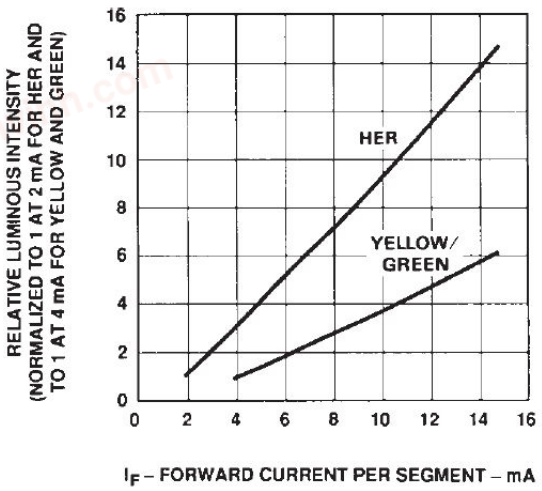


Figure 7. Relative Luminous Intensity vs. DC Forward Current.

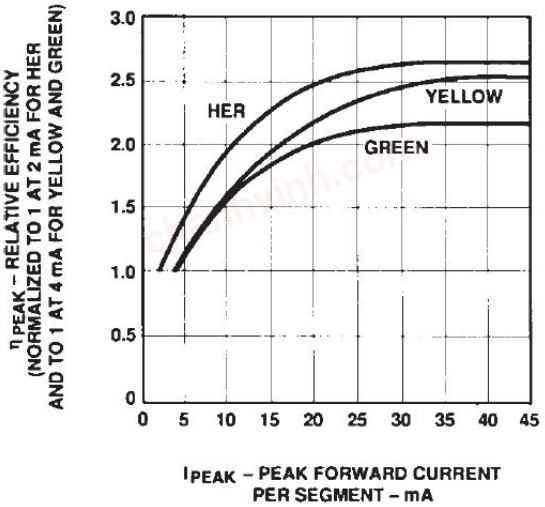


Figure 8. Relative Efficiency (Luminous Intensity per Unit Current) vs. Peak Current.

chanhvinh.com

## Intensity Bin Limits (mcd)

### AlGaAs Red

#### HDSP-A10x

| IV Bin Category | Min. | Max. |
|---|---|---|
| E | 0.315 | 0.520 |
| F | 0.428 | 0.759 |
| G | 0.621 | 1.16 |
| H | 0.945 | 1.71 |
| I | 1.40 | 2.56 |
| J | 2.10 | 3.84 |
| K | 3.14 | 5.75 |
| L | 4.70 | 8.55 |

#### HDSP-E10x / HDSP-F10x

| IV Bin Category | Min. | Max. |
|---|---|---|
| D | 0.391 | 0.650 |
| E | 0.532 | 0.923 |
| F | 0.755 | 1.39 |
| G | 1.13 | 2.08 |
| H | 1.70 | 3.14 |

#### HDSP-H10x / HDSP-K12x

| IV Bin Category | Min. | Max. |
|---|---|---|
| C | 0.415 | 0.690 |
| D | 0.565 | 0.990 |
| E | 0.810 | 1.50 |
| F | 1.20 | 2.20 |
| G | 1.80 | 3.30 |
| H | 2.73 | 5.00 |
| I | 4.09 | 7.50 |

#### HDSP-N10x

| IV Bin Category | Min. | Max. |
|---|---|---|
| A | 0.270 | 0.400 |
| B | 0.325 | 0.500 |
| C | 0.415 | 0.690 |
| D | 0.565 | 0.990 |
| E | 0.810 | 1.50 |
| F | 1.20 | 2.20 |
| G | 1.80 | 3.30 |
| H | 2.73 | 5.00 |
| I | 4.09 | 7.50 |

### HER

#### HDSP-751x

| IV Bin Category | Min. | Max. |
|---|---|---|
| B | 0.160 | 0.240 |
| C | 0.200 | 0.300 |
| D | 0.250 | 0.385 |
| E | 0.315 | 0.520 |
| F | 0.428 | 0.759 |
| G | 0.621 | 1.16 |

#### HDSP-335x

| IV Bin Category | Min. | Max. |
|---|---|---|
| B | 0.240 | 0.366 |
| C | 0.300 | 0.477 |
| D | 0.391 | 0.650 |
| E | 0.532 | 0.923 |
| F | 0.755 | 1.39 |
| G | 1.13 | 2.08 |
| H | 1.70 | 3.14 |

#### HDSP-555x

| IV Bin Category | Min. | Max. |
|---|---|---|
| A | 0.270 | 0.400 |
| B | 0.325 | 0.500 |
| C | 0.415 | 0.690 |
| D | 0.565 | 0.990 |
| E | 0.810 | 1.50 |
| F | 1.20 | 2.20 |
| G | 1.80 | 3.30 |
| H | 2.73 | 5.00 |
| I | 4.09 | 7.50 |

chanhvinh.com

## Intensity Bin Limits (mcd) (cont.)

### Yellow

### HDSP-A80x

| IV Bin Category | Min. | Max. |
|---|---|---|
| D | 0.250 | 0.385 |
| E | 0.315 | 0.520 |
| F | 0.425 | 0.760 |
| G | 0.625 | 1.14 |
| H | 0.940 | 1.70 |
| I | 1.40 | 2.56 |
| J | 2.10 | 3.84 |
| K | 3.14 | 5.76 |
| L | 4.71 | 8.64 |
| M | 7.07 | 13.00 |
| N | 10.60 | 19.40 |
| O | 15.90 | 29.20 |
| P | 23.90 | 43.80 |
| Q | 35.80 | 65.60 |

### Green

### HDSP-A90x

| IV Bin Category | Min. | Max. |
|---|---|---|
| E | 0.315 | 0.520 |
| F | 0.425 | 0.760 |
| G | 0.625 | 1.14 |
| H | 0.940 | 1.70 |
| I | 1.40 | 2.56 |
| J | 2.10 | 3.84 |
| K | 3.14 | 5.76 |
| L | 4.71 | 8.64 |
| M | 7.07 | 13.00 |
| N | 10.60 | 19.40 |
| O | 15.90 | 29.20 |
| P | 23.90 | 43.80 |
| Q | 35.80 | 65.60 |

## Color Categories

| | | Dominant Wavelength (nm) | |
|---|---|---|---|
| Color | Bin | Min. | Max. |
| Yellow | 1 | 581.50 | 585.00 |
| | 3 | 584.00 | 587.50 |
| | 2 | 586.50 | 590.00 |
| | 4 | 589.00 | 592.50 |
| Green | 2 | 573.00 | 577.00 |
| | 3 | 570.00 | 574.00 |
| | 4 | 567.00 | 571.00 |
| | 5 | 564.00 | 568.00 |

Note:
All categories are established for classification of products. Products may not be available in all categories. Please contact your Avago representatives for further clarification/information.

## Electrical/Optical

For more information on electrical/optical characteristics, please see Application Note 1005.

## Contrast Enhancement

For information on contrast enhancement, please see Application Note 1015.

## Soldering/Cleaning

Cleaning agents from the ketone family (acetone, methyl ethyl ketone, etc.) and from the chlorinated hydrocarbon family (methylene chloride, trichloroethylene, carbon tetrachloride, etc.) are not recommended for cleaning LED parts. All of these various solvents attack or dissolve the encapsulating epoxies used to form the package of plastic LED parts.

For information on soldering LEDs, please refer to Application Note 1027.

For product information and a complete list of distributors, please go to our web site: **www.avagotech.com**

Avago, Avago Technologies, and the A logo are trademarks of Avago Technologies in the United States and other countries.
Data subject to change. Copyright © 2005-2015 Avago Technologies. All rights reserved. Obsoletes 5989-3880EN
AV02-2554EN - October 9, 2015