chanhvinh.com

ASSR-1218 , ASSR-1219 and ASSR-1228

Form A, Solid State Relay (Photo MOSFET)
(60V/0.2A/10Ω)

AVAGO TECHNOLOGIES

Data Sheet

Lead (Pb) Free
RoHS 6 fully
compliant

Description

The ASSR-12XX Series consists of an AlGaAs infrared light-emitting diode (LED) input stage optically coupled to a high-voltage output detector circuit. The detector consists of a high-speed photovoltaic diode array and driver circuitry to switch on/off two discrete high voltage MOSFETs. The relay turns on (contact closes) with a minimum input current of 3mA through the input LED. The relay turns off (contact opens) with an input voltage of 0.8V or less.

The single channel configurations, ASSR-1218 and ASSR-1219, are equivalent to 1 Form A Electromechanical Relays (EMR), and the dual channel configuration, ASSR-1228, is equivalent to 2 Form A EMR. They are available in 4-pin SO, 6-pin DIP, 8-pin DIP and Gull Wing Surface Mount for DIP packages. ASSR-1219 enables AC/DC and DC-only output connections. For DC-only connection, the output current, Io, increases to 0.4A and the on-resistance, R(ON) reduces to 2.5Ω.

Functional Diagram

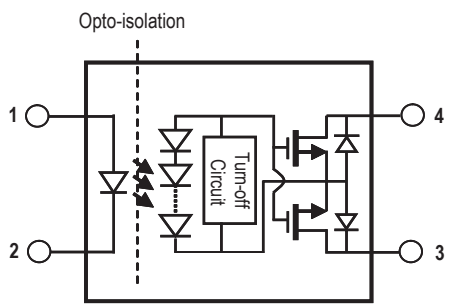

Single Channel, SPST Relay,
1 Form A in 4-Pin SO Package

Truth Table

LED	Output
Off	Open
On	Close

Features

- Compact Solid-State Bi-directional Signal Switch
- Single and Dual Channel Normally-off Single-Pole-Single-Throw (SPST) Relay
- 60V Output Withstand Voltage
- 0.2A or 0.4A Current Rating
  (See Schematic for ASSR-1219 Connection A and B)
- Low Input Current: CMOS Compatibility
- Low On-Resistance: 0.25Ω Typical for DC-only,
  1Ω Typical for AC/DC
- High Input-to-Output Insulation Voltage
  (Safety and Regulatory Approved)
  - 3750 Vrms for 1 min per UL1577
  - CSA Component Acceptance

Applications

- Telecommunication Switching
- Data Communications
- Industrial Controls
- Medical
- Security
- EMR / Reed Relay Replacement

CAUTION: *It is advised that normal static precautions be taken in handling and assembly of this component to prevent damage and/or degradation which may be induced by ESD.*

chanhvinh.com

Ordering Information

ASSR-xxxx is UL Recognized with 3750 Vrms for 1 minute per UL1577 and is approved under CSA Component Acceptance Notice #5.

Part number	Option RoHS Compliant	Package	Surface Mount	Gull Wing	Tape & Reel	Quantity
ASSR-1218	-003E	SO-4	X			100 units per tube
	-503E		X		X	1500 units per reel
ASSR-1219	-001E	300mil DIP-6				50 units per tube
	-301E		X	X		50 units per tube
	-501E		X	X	X	1000 units per reel
ASSR-1228	-002E	300 mil DIP-8				50 units per tube
	-302E		X	X		50 units per tube
	-502E		X	X	X	1000 units per reel

Note: option x2xE for UL1577 5000Vrms for 1minute will be offered to DIP-6 and DIP-8 only. ASSR-1218 in SO4 is tested at 3750Vrms

To order, choose a part number from the part number column and combine with the desired option from the option column to form an order entry.

Example 1:

ASSR-1219-501E to order product of 300mil DIP-6 Gull Wing Surface Mount package in Tape and Reel packaging and RoHS Compliant.

Example 2:

ASSR-1228-002E to order product of 300mil DIP-8 package in tube packaging and RoHS Compliant.

Option datasheets are available. Contact your Avago sales representative or authorized distributor for information.

System Schematics

ASSR-1218

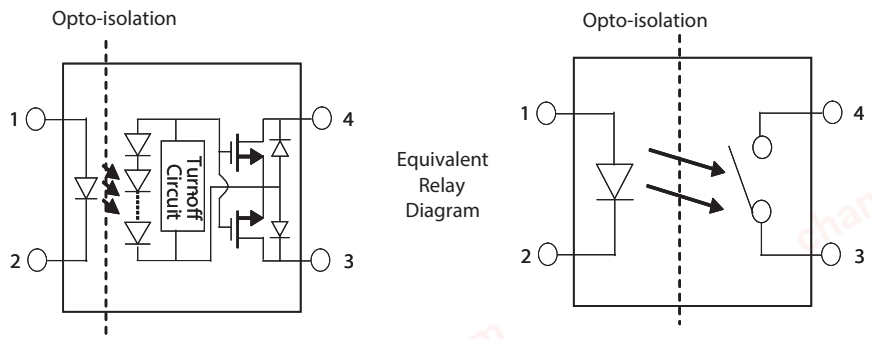

chanhvinh.com

ASSR-1219 Connection A

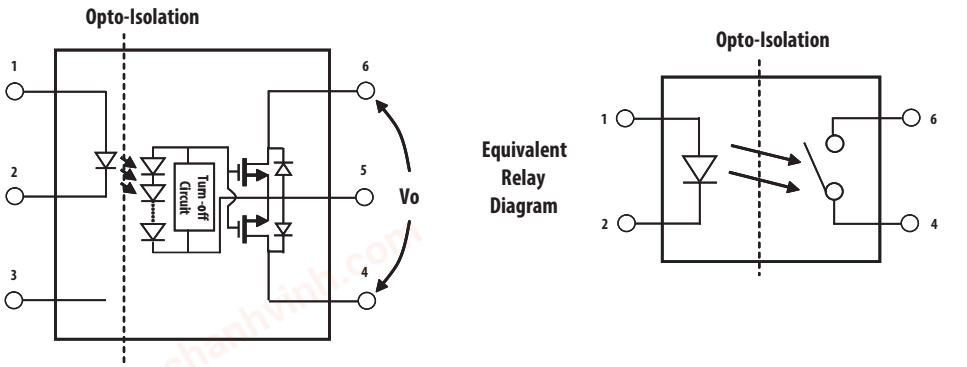

ASSR-1219 Connection B

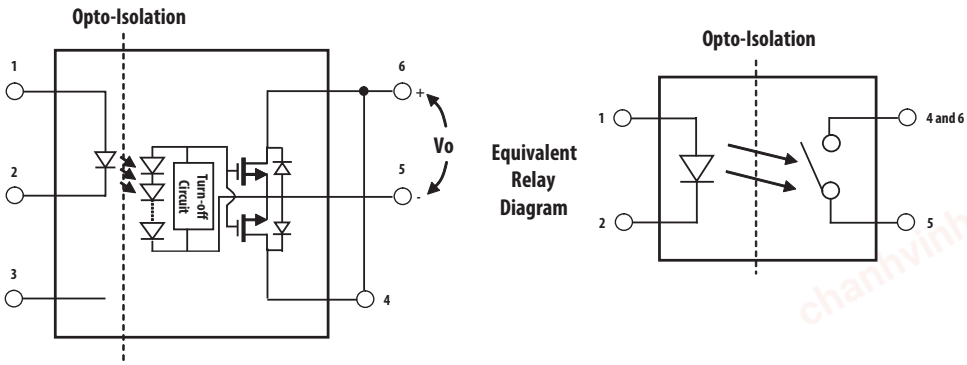

ASSR-1228

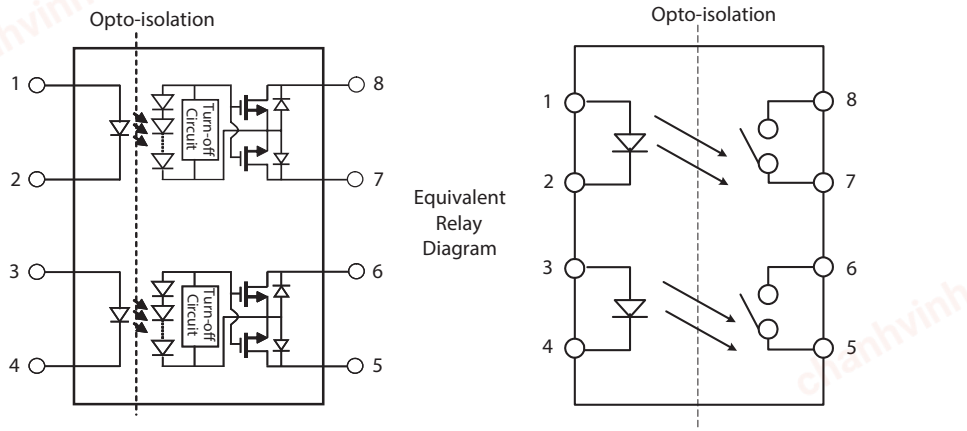

chanhvinh.com

Package Outline Drawings

ASSR-1218 4-Pin Small Outline Package

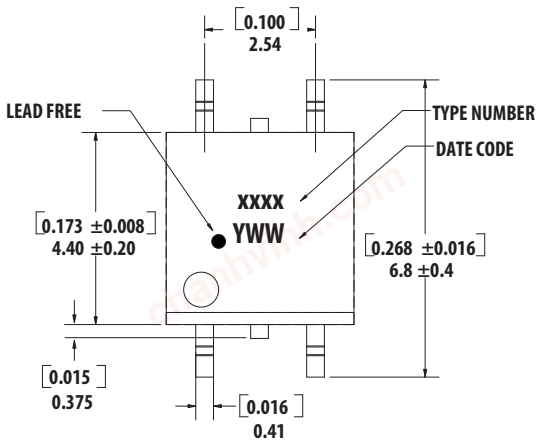

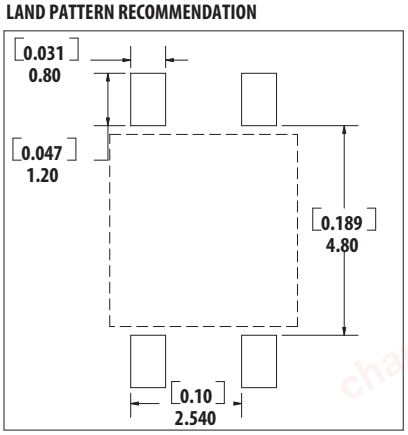

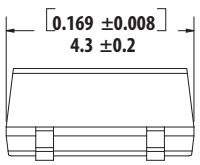

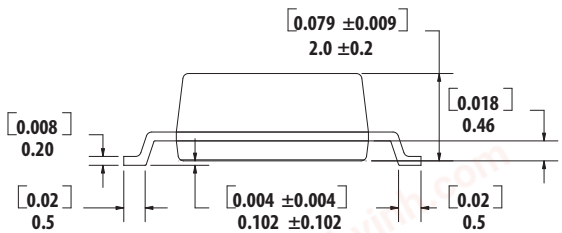

DIMENSIONS IN MILLIMETERS AND [INCHES]
OPTION NUMBER 500 AND UL RECOGNITION NOT MARKED

ASSR-1219 6-Pin DIP Package

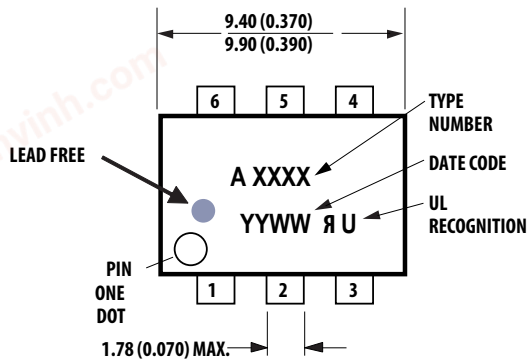

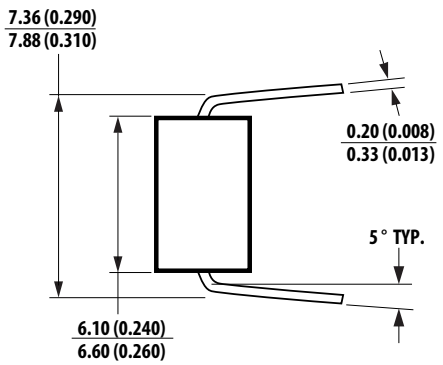

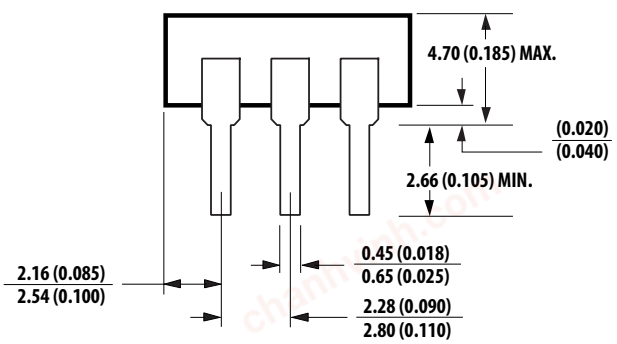

DIMENSIONS IN MILLIMETERS AND (INCHES).

chanhvinh.com

ASSR-1219 6-Pin DIP Package with Gull Wing Surface Mount Option 300

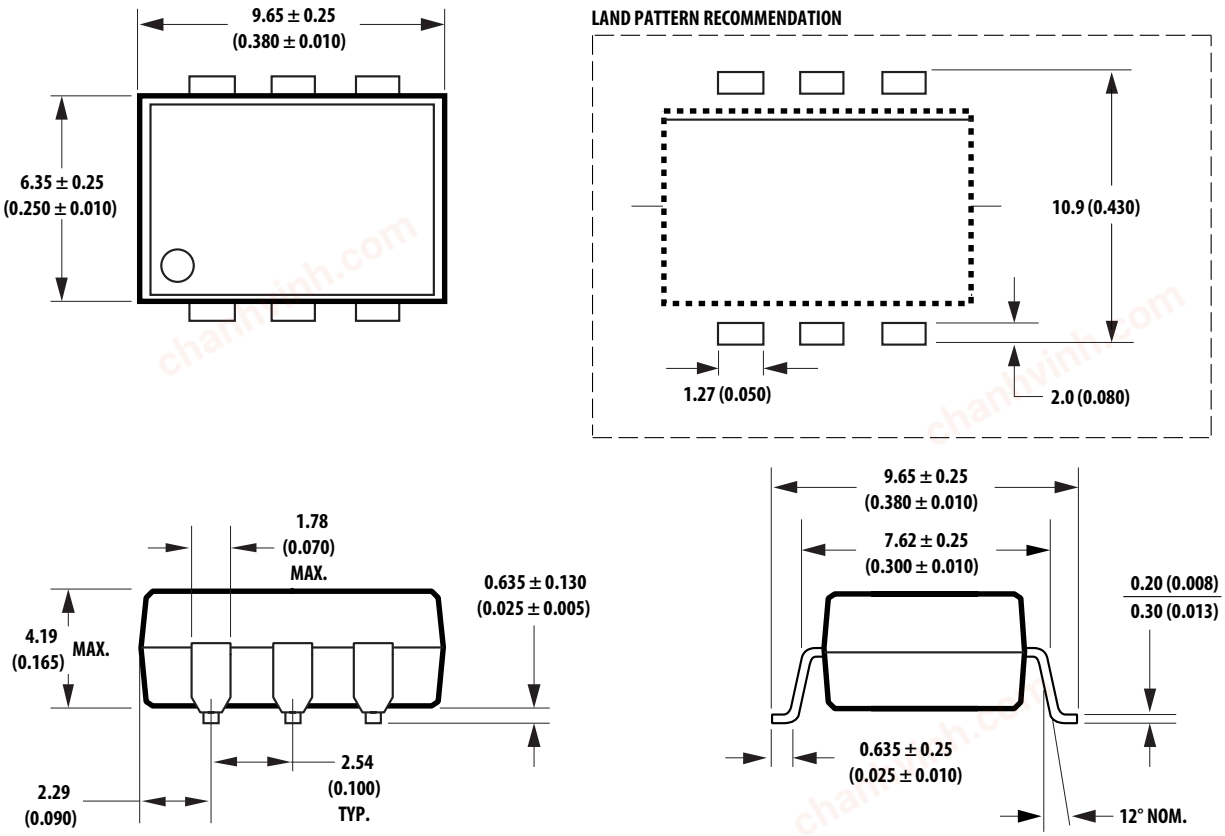

NOTE: FLOATING LEAD PROTRUSION IS 0.25 mm (10 mils) MAX.

ASSR-1228 8-Pin DIP Package

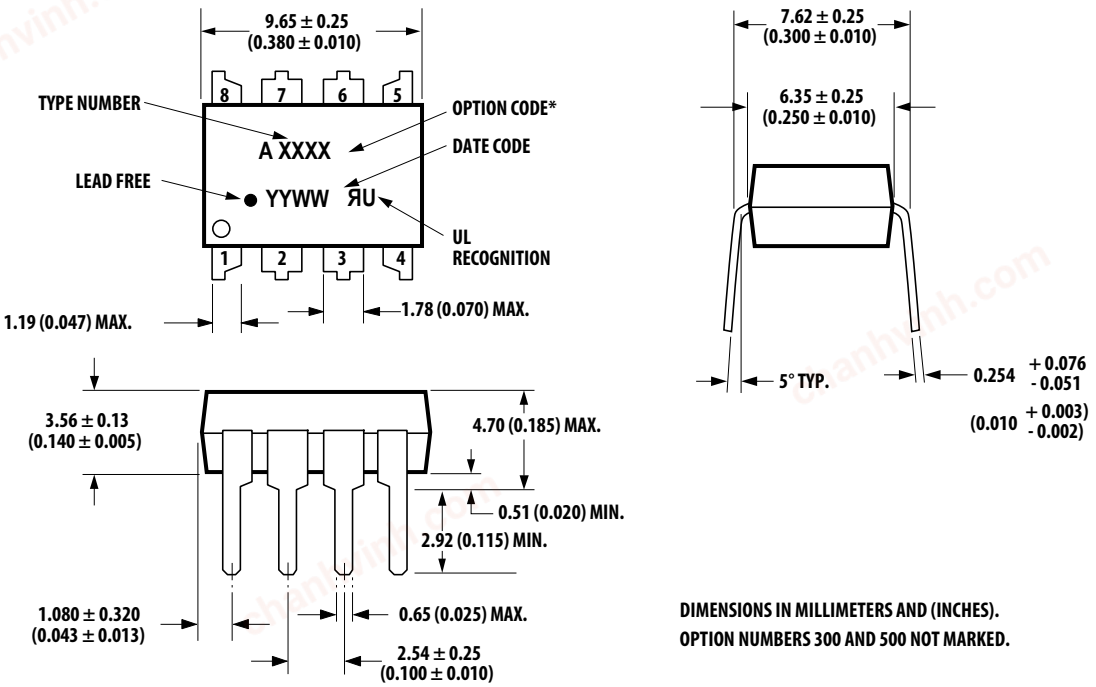

DIMENSIONS IN MILLIMETERS AND (INCHES).
OPTION NUMBERS 300 AND 500 NOT MARKED.

chanhvinh.com

ASSR-1228 8-Pin DIP Package with Gull Wing Surface Mount Option 300

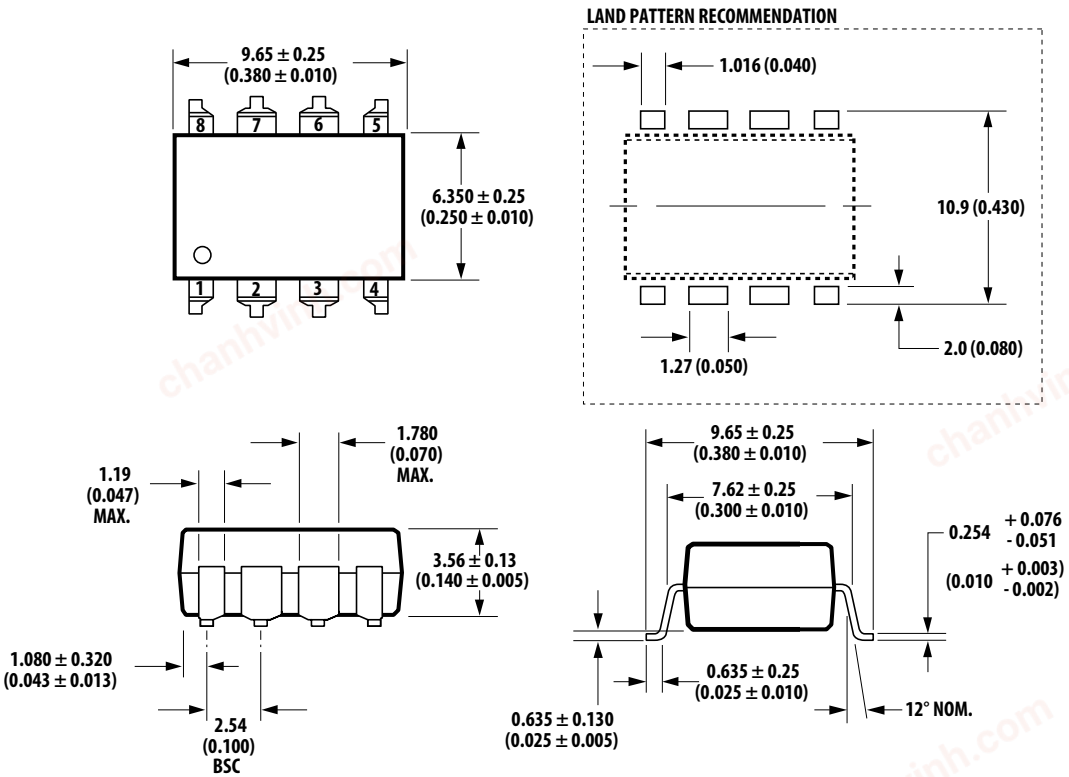

DIMENSIONS IN MILLIMETERS (INCHES).
LEAD COPLANARITY = 0.10 mm (0.004 INCHES).

NOTE: FLOATING LEAD PROTRUSION IS 0.25 mm (10 mils) MAX.

Lead Free IR Profile

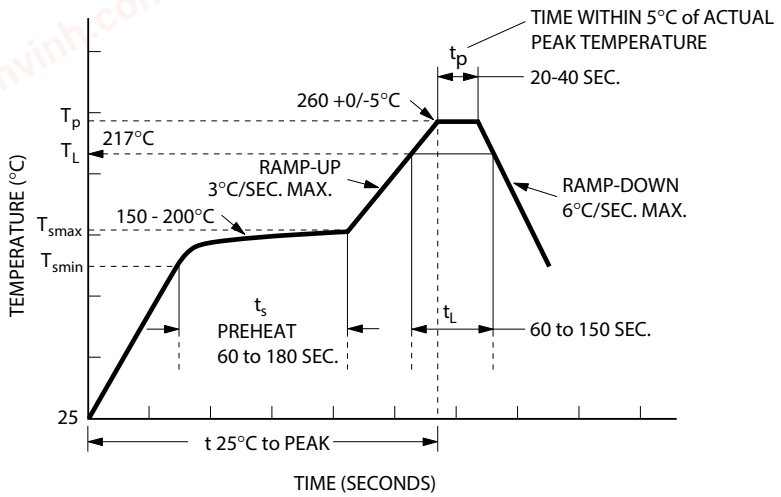

NOTES:
THE TIME FROM 25°C to PEAK TEMPERATURE = 8 MINUTES MAX.
T_{smax} = 200°C, T_{smin} = 150°C

Non-halide flux should be used

chanhvinh.com

Regulatory Information

The ASSR-1218, ASSR-1219 and ASSR-1228 are approved by the following organizations:

UL

Approved under UL 1577, component recognition program up to V_{ISO} = 3750 V_{RMS}

CSA

Approved under CSA Component Acceptance Notice #5.

Insulation and Safety Related Specifications

Parameter	Symbol	ASSR-1218	ASSR-1219 ASSR-1228	Units	Conditions
Minimum External Air Gap (Clearance)	L(101)	4.9	7.1	mm	Measured from input terminals to output terminals, shortest distance through air.
Minimum External Tracking (Creepage)	L(102)	4.9	7.4	mm	Measured from input terminals to output terminals, shortest distance path along body.
Minimum Internal Plastic Gap (Internal Clearance)		0.08	0.08	mm	Through insulation distance conductor to conductor, usually the straight line distance thickness between the emitter and detector.
Tracking Resistance (Comparative Tracking Index)	CTI	175	175	V	DIN IEC 112/VDE 0303 Part 1
Isolation Group (DIN VDE0109)		IIIa	IIIa		Material Group (DIN VDE 0109)

chanhvinh.com

Absolute Maximum Ratings

Parameter		Symbol	Min.	Max.	Units	Note
Storage Temperature		T_S	-55	125	°C	
Operating Temperature		T_A	-40	85	°C	
Junction Temperature		T_J		125	°C	
Lead Soldering Cycle	Temperature			260	°C	
	Time			10	s	
Input Current	Average	I_F		25	mA	
	Surge			50		
	Transient			1000		
Reversed Input Voltage		V_R		5	V	
Input Power Dissipation	ASSR-1218	P_{IN}		40	mW	
	ASSR-1219	P_{IN}		40	mW	
	ASSR-1228	P_{IN}		80	mW	
Output Power Dissipation	ASSR-1218	P_O		400	mW	
	ASSR-1219	P_O		400	mW	
	ASSR-1228	P_O		800	mW	
Average Output Current (T_A = 25°C, $T_C \leq$ 100°C)		I_O		0.20	A	1
	ASSR-1219 Connection B	I_O		0.40	A	1
Output Voltage (T_A = 25°C)		V_O	-60	60	V	2
	ASSR-1219 Connection B	V_O	0	60	V	
Solder Reflow Temperature Profile		See Lead Free IR Profile				

Recommended Operating Conditions

Parameter	Symbol	Min.	Max.	Units	Note
Input Current (ON)	$I_{F(ON)}$	3	20	mA	3
Input Voltage (OFF)	$V_{F(OFF)}$	0	0.8	V	
Operating Temperature	T_A	-40	+85	°C	

chanhvinh.com

Package Characteristics

Unless otherwise specified, T_A = 25°C.

Parameter	Sym.	Min.	Typ.	Max.	Units	Conditions	Note
Input-Output Momentary Withstand Voltage	V_{ISO}	3750			Vrms	RH ≤ 50%, t = 1 min	4, 5
Input-Output Resistance	R_{I-O}		10^{12}		Ω	V_{I-O} = 500 Vdc	
Input-Output Capacitance	ASSR-1218 C_{I-O}		0.4		pF	f = 1 MHz; V_{I-O} = 0 Vdc	4
	ASSR-1219 C_{I-O}		0.5		pF	f = 1 MHz; V_{I-O} = 0 Vdc	
	ASSR-1228 C_{I-O}		0.8		pF	f = 1 MHz; V_{I-O} = 0 Vdc	

Electrical Specifications (DC)

For operating T_A = +25°C

Parameter	Sym.	Min.	Typ.	Max.	Units	Conditions	Fig.	Note
Output Withstand Voltage	$\|V_{O(OFF)}\|$	60	65		V	V_F =0.8V, I_O=250 μA	5	
Output Leakage Current	$I_{O(OFF)}$		0.005	1	μA	V_F =0.8V, V_O=60V		
Input Reverse Breakdown Voltage	V_R	5			V	I_R =10 μA		
Input Forward Voltage	V_F	1.1	1.3	1.6	V	I_F =5mA	6, 7	
Output On-resistance	$R_{(ON)}$		1	10	Ω	I_F =5mA, I_O=200mA, Pulse ≤30ms	8, 9	6
	ASSR-1219 Connection B		0.25	2.5	Ω	I_F =5mA, I_O=400mA, Pulse ≤30ms		

chanhvinh.com

Switching Specifications (AC)

For operating T_A = +25°C

Parameter	Sym.	Min.	Typ.	Max.	Units	Conditions	Fig.	Note
Turn On Time	T_{ON}		0.7	5.0	ms	I_F =5mA, I_O=200mA		
Turn Off Time	T_{OFF}		0.04	5.0	ms	I_F =5mA, I_O=200mA,		

Notes:
1. For derating, refer to Figure 1, 2, 3 and 4.
2. The voltage across the output terminals of the relay should not exceed this rated withstand voltage. Over-voltage protection circuits should be added in some applications to protect against over-voltage transients.
3. Threshold to switch device is $I_F \geq 0.5$mA, however, for qualified device performance over temperature range, it is recommended to operate at I_F =5mA.
4. Device is considered as a two terminal device:
   ASSR-1218 - pin 1, 2 shorted and pin 3, 4 shorted.
   ASSR-1219 - pin 1, 2, 3 shorted and pin 4, 5, 6 shorted.
   ASSR-1228 - pin 1, 2, 3, 4 shorted and pin 5, 6, 7, 8 shorted.
5. The Input-Output Momentary Withstand Voltage is a dielectric voltage rating that should not be interpreted as an input-output continuous voltage rating. For the continuous voltage rating refer to the IEC/EN/DIN EN 60747-5-2 Insulation Characteristics Table (if applicable), your equipment level safety specification, or Avago Technologies Application Note 1074, "Optocoupler Input-Output Endurance Voltage."
6. During the pulsed $R_{(ON)}$ measurement (I_O duration ≤30ms), ambient (T_A) and case temperature (T_C) are equal.

chanhvinh.com

Application Information

On-Resistance and Derating Curves

The Output On-Resistance, $R_{(ON)}$, specified in this data sheet, is the resistance measured across the output contact when a pulse current signal (Io=200mA) is applied to the output pins. The use of a pulsed signal (≤30ms) implies that each junction temperature is equal to the ambient and case temperatures. The steady-state resistance, Rss, on the other hand, is the value of resistance measured across the output contact when a DC current signal is applied to the output pins for a duration sufficient to reach thermal equilibrium. Rss includes the effects of the temperature rise in the device.

Figure 1, 2, 3 and 4 specify the maximum average output current allowable for a given ambient temperature. The maximum allowable output current and power dissipation are related by the expression Rss = Po(max)/(Io(max))^2 from which Rss can be calculated. Staying within the safe area assures that the steady state MOSFET junction temperature remains less than 125 °C.

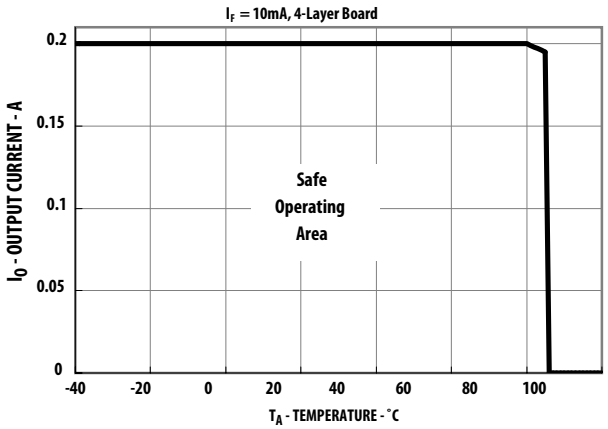

Figure 1. Maximum Output Current Rating vs Ambient Temperature (ASSR-1218-003E)

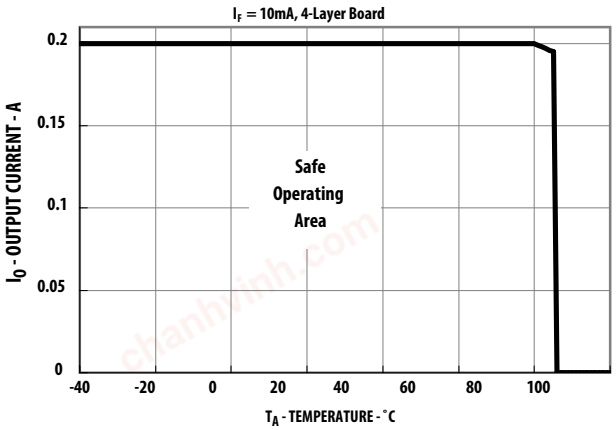

Figure 2. Maximum Output Current Rating vs Ambient Temperature (ASSR-1219-001E)

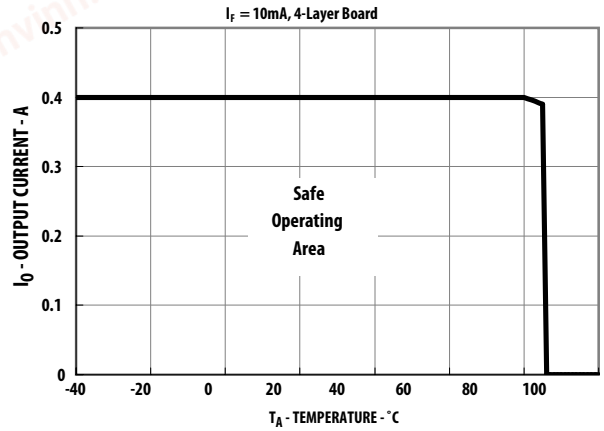

Figure 3. Maximum Output Current Rating vs Ambient Temperature (ASSR-1219-001E DC Connection)

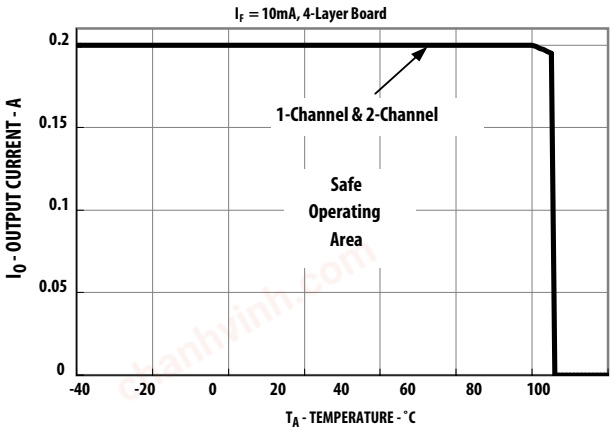

Figure 4. Maximum Output Current Rating vs Ambient Temperature (ASSR-1228-002E)

chanhvinh.com

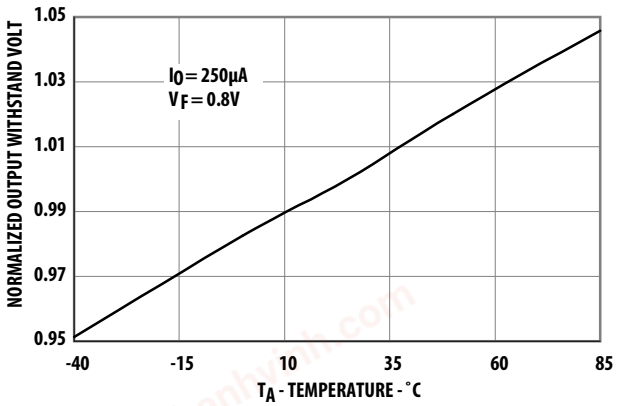

Figure 5. Normalized Output Withstand Voltage vs Temperature

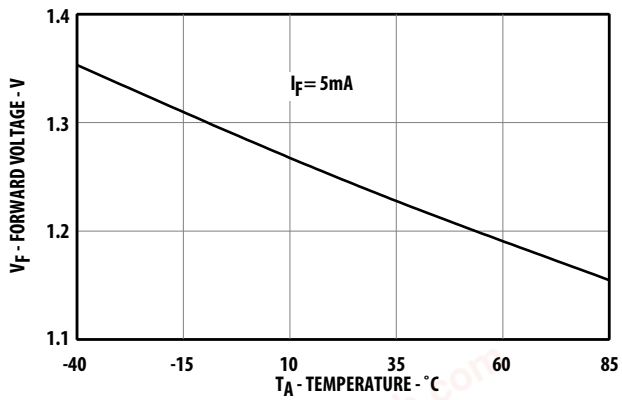

Figure 6. Typical Forward Voltage vs Temperature

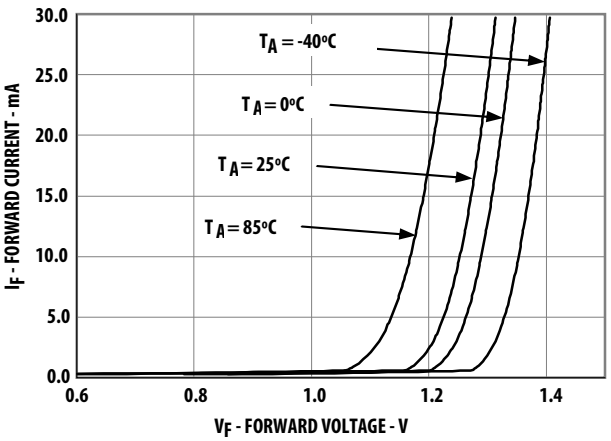

Figure 7. Typical Forward Current vs Forward Voltage

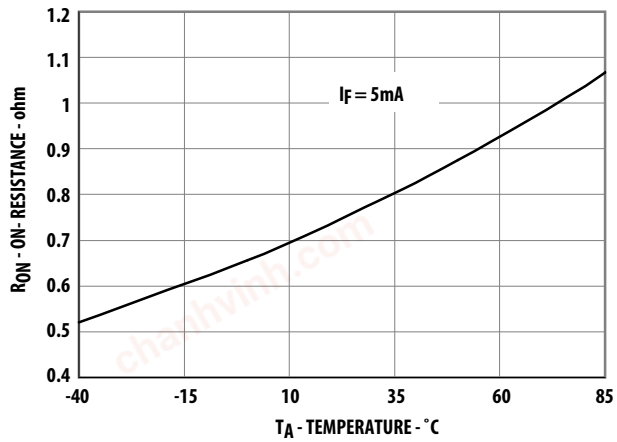

Figure 8. Typical on Resistance vs Temperature

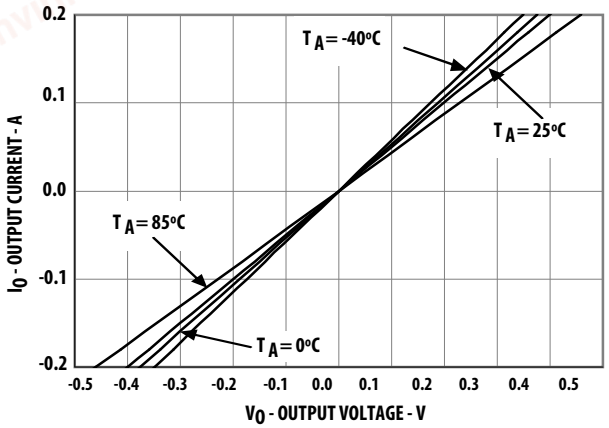

Figure 9. Typical Output Current vs Output Voltage

For product information and a complete list of distributors, please go to our web site: **www.avagotech.com**

Avago, Avago Technologies, and the A logo are trademarks of Avago Technologies in the United States and other countries.
Data subject to change. Copyright © 2005-2015 Avago Technologies. All rights reserved.
AV02-0173EN - August 21, 2015