chanhvinh.com

ASMT-YTB2-0BB02

High Brightness Tricolor PLCC6 Black Surface LED

Data Sheet

Lead (Pb) Free
RoHS 6 fully
compliant



Description

The high brightness black top surface tri-color PLCC-6 family of SMT LEDs has a separate heat path for each LED dice, enabling the LED to be driven at higher current. These SMT LEDs are in the high brightness category, are high reliability devices, are high performance and are designed for a wide range of environmental conditions. By integrating the black top surface Avago devices deliver better contrast enhancement for your application. They also provide super wide viewing angle at 120° with the built in reflector pushing up the intensity of the light output. The high reliability characteristics and other features make the black top surface tri-color PLCC-6 family ideally suitable for exterior and interior full color signs application conditions.

For easy pick & place, the LEDs are shipped in EIA-compliant tape and reel. Every reel is shipped from a single intensity and color bin; except red color providing better uniformity. These tri-color LEDs are compatible with reflow soldering process.

Features

- Industry Standard PLCC-6 package (Plastic Leaded Chip Carrier) with individual addressable pin-out for higher flexibility of driving configuration
- High reliability LED package with silicone encapsulation
- High brightness using AlInGaP and InGaN dice technologies
- Wide viewing angle at 120°
- Compatible with reflow soldering process
- JEDEC MSL 2a
- Water-Resistance (IPX6*) per IEC 60529:2001

* The test is conducted on component level by mounting the components on PCB with proper potting to protect the leads. It is strongly recommended that customers perform necessary tests on the components for their final application.

Applications

- Indoor and outdoor full color display

CAUTION: *LEDs are Class 1C ESD sensitive. Please observe appropriate precautions during handling and processing. Please refer to Avago Application Note AN-1142 for additional details.*

chanhvinh.com

Package Dimensions

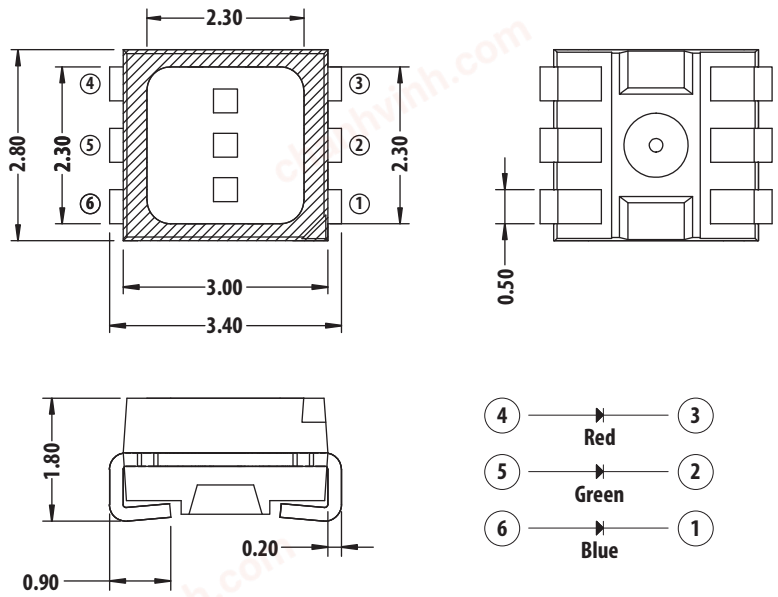

Lead Configuration

1	Cathode	Blue
2	Cathode	Green
3	Cathode	Red
4	Anode	Red
5	Anode	Green
6	Anode	Blue

Notes:
1. All Dimensions are in millimeters
2. Tolerance = ±0.2 mm unless otherwise specified
3. Terminal Finish: Ag plating
4. Encapsulantion material: silicone resin

Table 1. Device Selection Guide

	Color 1 - AlInGaP Red				**Color 2 -** InGaN Green				**Color 3 -** InGaN Blue			
	Min. Iv @20mA		**Typ. Iv @ 20mA**	**Max Iv @ 20mA**	**Min. Iv @ 20mA**		**Typ. Iv @ 20mA**	**Max Iv @ 20mA**	**Min. Iv @ 20mA**		**Typ. Iv @ 20mA**	**Max Iv @ 20mA**
Part Number	**Bin ID**	**(mcd)**	**(mcd)**	**(mcd)**	**Bin ID**	**(mcd)**	**(mcd)**	**(mcd)**	**Bin ID**	**(mcd)**	**(mcd)**	**(mcd)**
ASMT-YTB2-0BB02	U2	560	745	1125	W1	1125	1600	2240	T1	285	380	560

Notes:
1. The luminous intensity I_V, is measured at the mechanical axis of the LED package and it is tested in pulsing condition. The actual peak of the spatial radiation pattern may not be aligned with this axis.
2. Tolerance = ± 12%

Part Numbering System

ASMT –Y TB2 – X_1 X_2 X_3 X_4 X_5

- **Packaging Option**
- **Color Bin Selection**
- **Intensity Bin Limit**
- **Intensity Bin Selection**
- **Device Specification Configuration**
- **Package Type**
  B: Black Surface Tricolor
- **Color**
  T: Tricolor
- **Produce Family**
  Y: Silicone Based PLCC6

chanhvinh.com

Table 2. Absolute Maximum Ratings (T_A = 25°C)

Parameter	Red	Green & Blue	Unit
DC forward current [1]	50	30	mA
Peak forward current [2]	100	100	mA
Power dissipation	125	114	mW
Reverse voltage	4V[3]		V
Maximum junction temperature $T_{j\ max}$	125		°C
Operating temperature range	-40 to + 110[4]		°C
Storage temperature range	-40 to + 120		°C

Notes:
1. Derate linearly as shown in Figure 4a & 4b.
2. Duty Factor = 10% Frequency = 1KHz
3. Driving the LED in reverse bias condition is suitable for short term only
4. Refer to Figure 4a and figure 4b for more information

Table 3. Optical Characteristics (T_A = 25°C)

	Dominant Wavelength, λ_d (nm) [1]			Peak Wavelength, λ_p (nm)	Viewing Angle $2\theta_{½}$[2] (Degrees)	Luminous Efficacy η_V[3] (lm/W)	Luminous Efficiency η_e (lm/W)
Color	**Min**	**Typ.**	**Max**	**Typ.**	**Typ.**	**Typ.**	**Typ.**
Red	618	622	628	629	120	210	43
Green	525	530	537	521	120	535	75
Blue	465	470	477	464	120	84	15

Notes:
1. The dominant wavelength is derived from the CIE Chromaticity Diagram and represents the perceived color of the device.
2. $\theta_{½}$ is the off axis angle where the luminous intensity is ½ the peak intensity
3. Radiant intensity, Ie in watts / steradian, may be calculated from the equation Ie = I_V / η_V, where I_V is the luminous intensity in candelas and η_V is the luminous efficacy in lumens / watt.
4. Φ_V is the total luminous flux output as measured with an integrating sphere at mono pulse condition.

Table 4. Electrical Characteristics (T_A = 25°C)

	Forward Voltage, V_F (V) [1]			Reverse Voltage V_R @ 100μA	Reverse Voltage V_R @ 10μA	Thermal Resistance $R\theta_{J-P}$ (°C/W) [2]
Color	**Min**	**Typ.**	**Max.**	**Min.**	**Min.**	**Typ**
Red	1.80	2.10	2.50	4	–	280
Green	2.80	3.20	3.80	–	4	180
Blue	2.80	3.20	3.80	–	4	180

Notes:
1. Tolerance ± 0.1V.
2. One chip on thermal resistance

chanhvinh.com

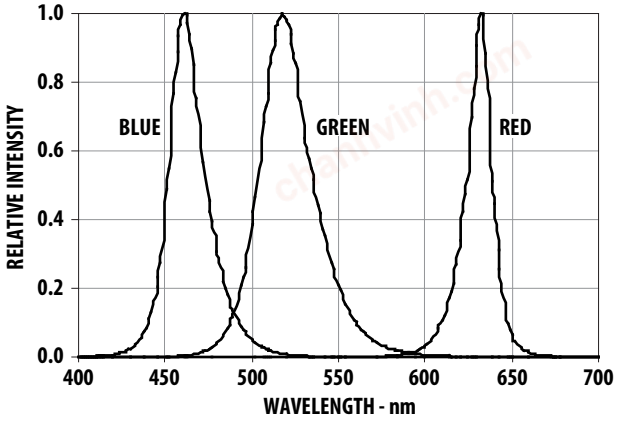

Figure 1. Relative Intensity vs Wavelength

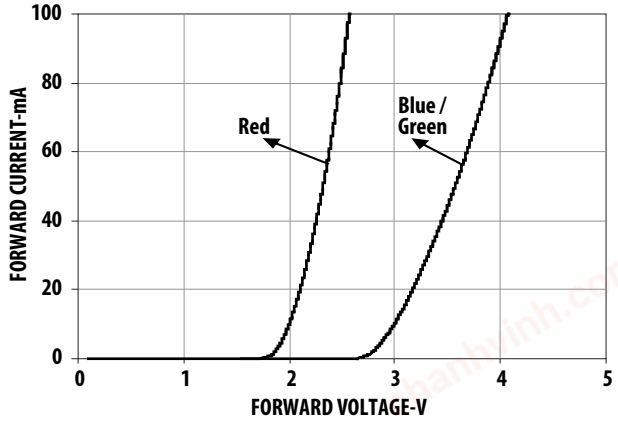

Figure 2. Forward Current-mA vs Forward Voltage-V

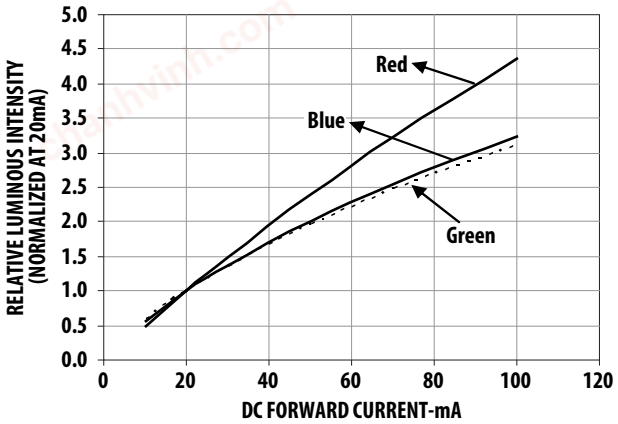

Figure 3. Relative Intensity vs Forward Current

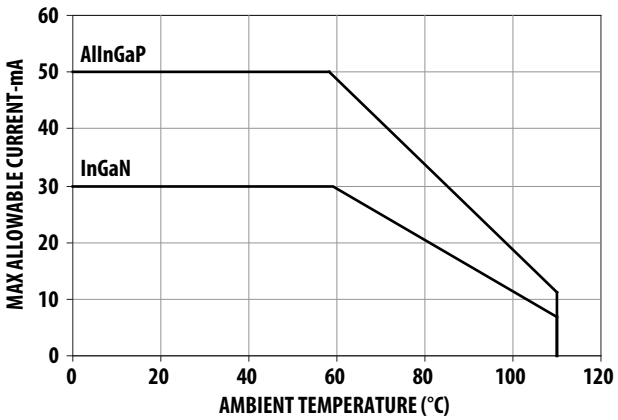

Figure 4a. Maximum forward current vs. ambient temperature. Derated based on T_{JMAX} = 125°C. (3 chips)

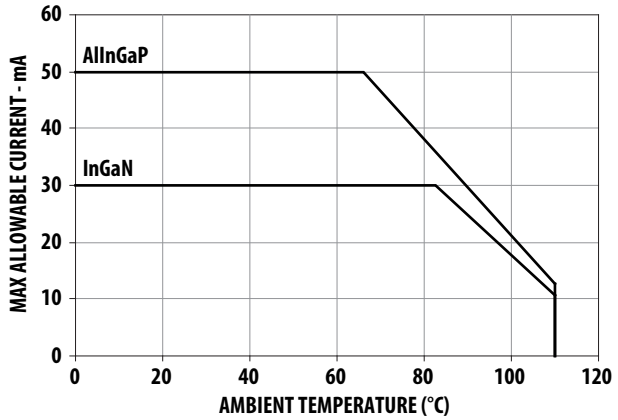

Figure 4b. Maximum forward current vs. ambient temperature. Derated based on T_{JMAX} = 125°C. (single chip)

chanhvinh.com

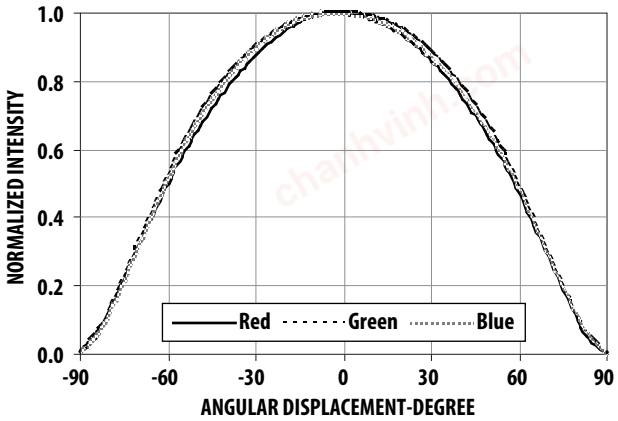

Figure 5a. Radiation Pattern for X axis

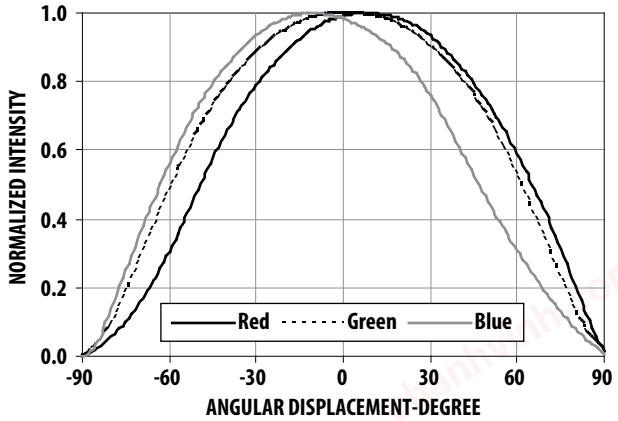

Figure 5b. Radiation Pattern for Y axis

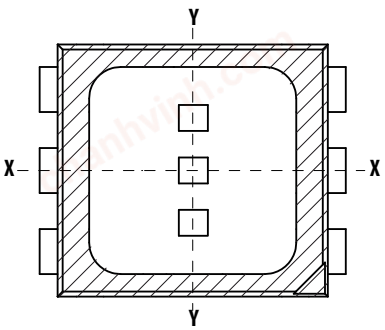

Figure 5c. Component Axis for Radiation Patterns

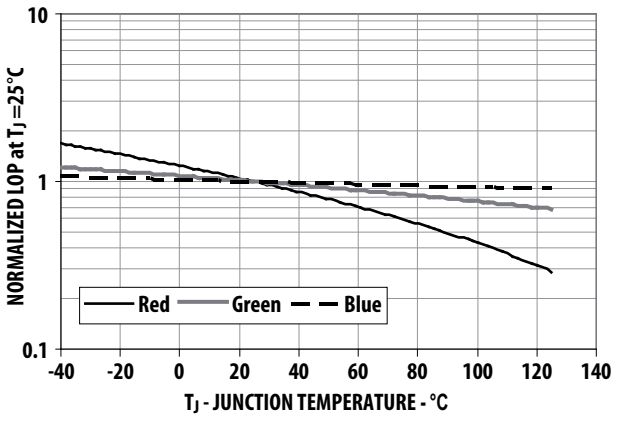

Figure 6. Relative Intensity vs Junction Temperature

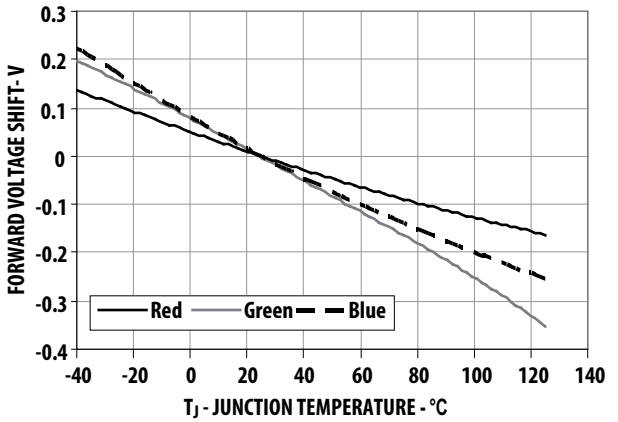

Figure 7. Forward Voltage vs Junction Temperature

chanhvinh.com

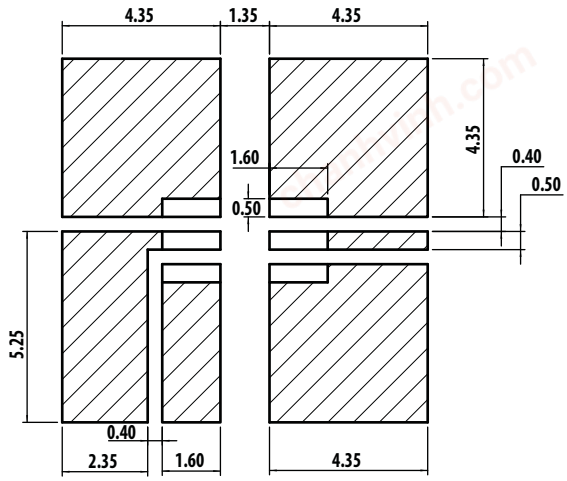

Figure 8a. Recommended soldering land pattern.

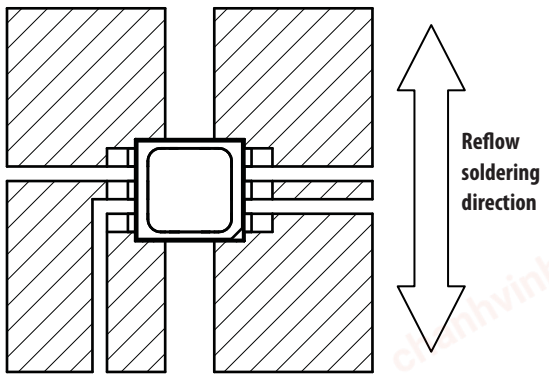

Figure 8b. LED Configuration on land pattern

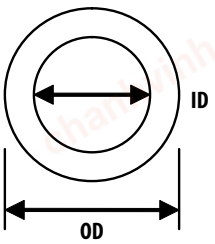

ID = 1.7mm
OD = 3.5mm

Figure 9. Recommended Pick and Place Nozzle Tip

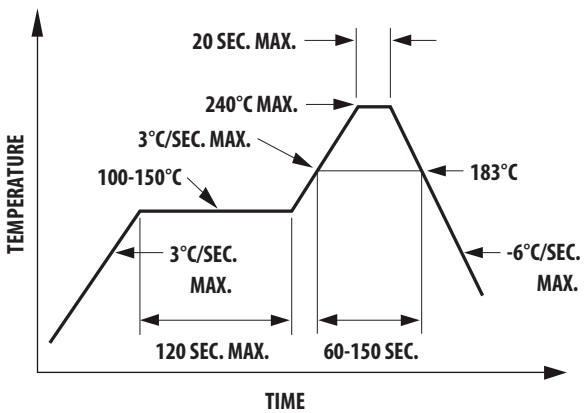

Figure 10. Recommended leaded reflow soldering profile.

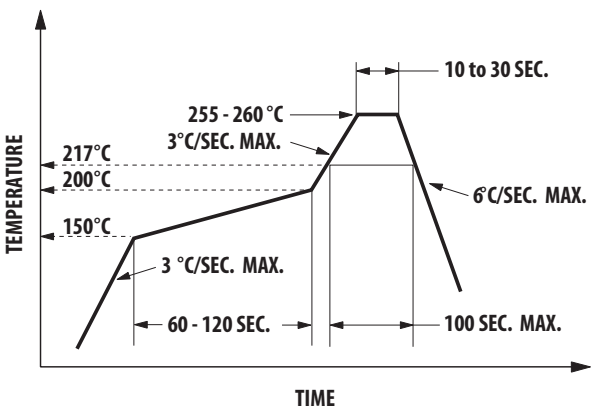

Figure 11. Recommended Pb-free reflow soldering profile.

Note: For detail information on reflow soldering of Avago surface mount LEDs, do refer to Avago Application Note AN 1060 Surface Mounting SMT LED Indicator Components

chanhvinh.com

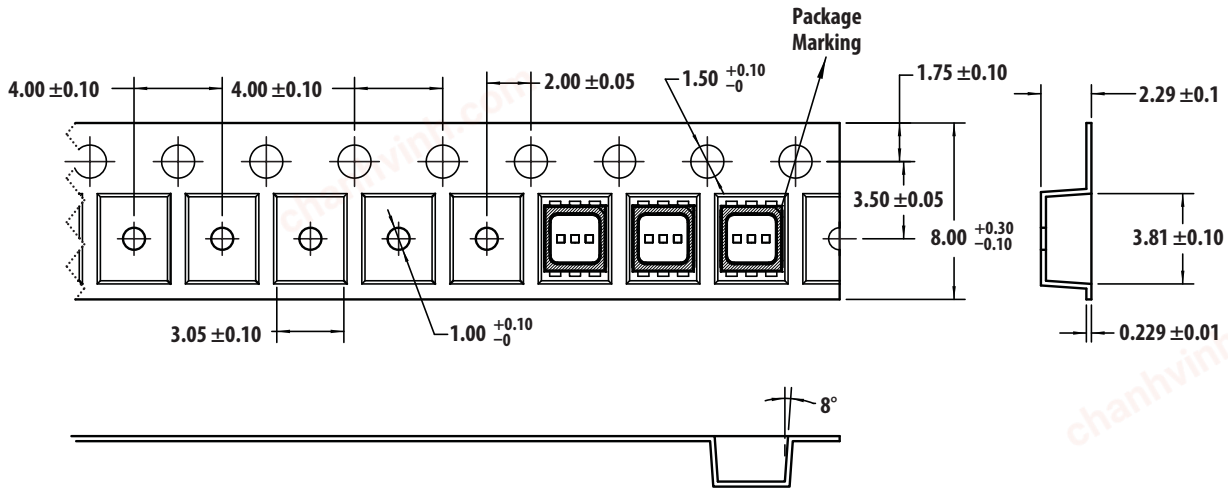

Figure 12. Carrier tape Dimension

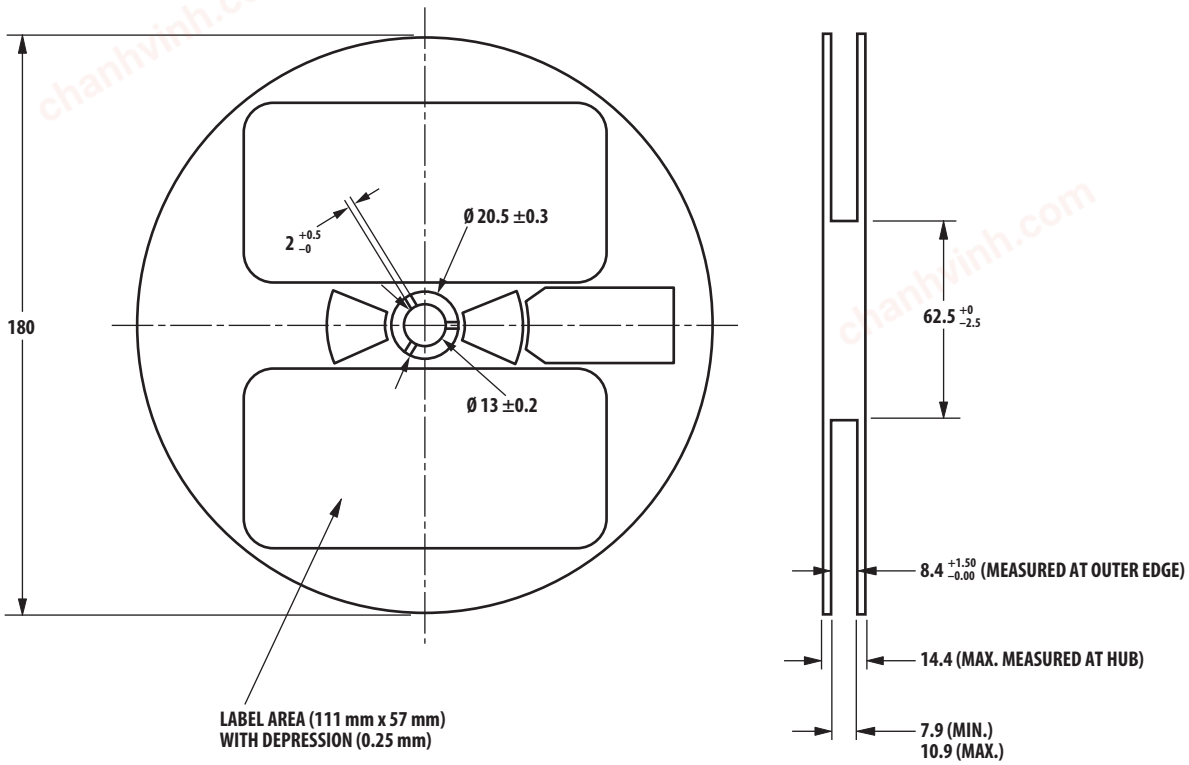

Figure 13. Reel Dimension

chanhvinh.com

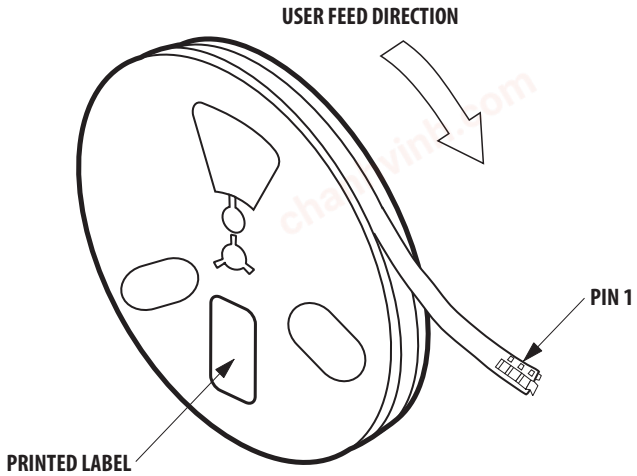

Figure 14. Reeling Orientation

Packaging Label:

(i) Avago Mother Label (Available on MBB bags)

AVAGO TECHNOLOGIES
STANDARD LABEL LS0002
RoHS Compliant Halogen Free
e4 Max Temp 260C MSL2a

(1P) Item: Part Number
(1T) Lot: Lot Number
(Q) QTY: Quantity
LPN:
CAT: Intensity Bin
(9D)MFG Date: Manufacturing Date
BIN: Color Bin
(P) Customer Item:
(V) Vendor ID:
(9D) Date Code: Date Code
DeptID:
Made In: Country of Origin

(ii) Avago Baby Label (Available on reel)

(1P) PART #: Part Number
(1T) LOT #: Lot Number
AVAGO TECHNOLOGIES
BABY LABEL COSB001B V0.0
(9D)MFG DATE: Manufacturing Date
QUANTITY: Packing Quantity
C/O: Country of Origin
(9D): DATE CODE:
(1T) TAPE DATE:
D/C: Date Code VF:
CAT: INTENSITY BIN
BIN: COLOR BIN

chanhvinh.com

Example indicates luminous Intensity information for Red, Green and Blue respectively from label:

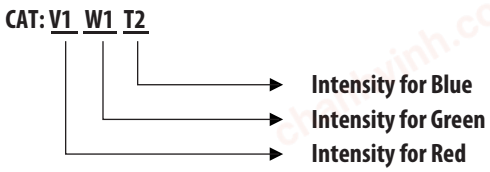

Example indicates color bin information for Green and Blue from label:

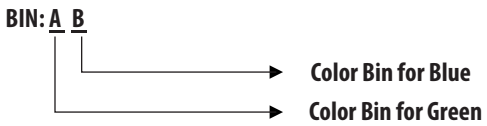

Note: There will be no red color bin information appear on label as it is not binned and support with full distribution range.

Intensity Bin Selection (X_2, X_3)

Individual reel will contain parts from 1 half bin only

	Min Iv Bin (Minimum Intensity Bin)		
X_2	Red	Green	Blue
B	U2	W1	T1

	Number of Half Bin from X_2		
X_3	Red	Green	Blue
B	3	3	3

Color Bin Selection (X_4)

Individual reel will contain parts from 1 full bin only

	Color Bin Combinations		
X_4	Red	Green	Blue
0	Full distribution	A, B, C	A, B, C, D, E

Intensity Bin Limit

Bin ID	Min (mcd)	Max (mcd)
T1	285.0	355.0
T2	355.0	450.0
U1	450.0	560.0
U2	560.0	715.0
V1	705.0	900.0
V2	900.0	1125.0
W1	1125.0	1400.0
W2	1400.0	1800.0
X1	1800.0	2240.0

Tolerance for each bin limits is ±12%

chanhvinh.com

Color Bin Limits

Red Color Bin Table

Bin ID	Min Dom	Max Dom					
Full Distribution	618	628	x	0.6873	0.6696	0.6866	0.7052
			y	0.3126	0.3136	0.2967	0.2948

Tolerance of each bin limit is ± 1 nm

Green Color Bin Table

Bin ID	Min Dom	Max Dom					
A	525.0	531.0	x	0.1142	0.1799	0.2138	0.1625
			y	0.8262	0.6783	0.6609	0.8012
B	528.0	534.0	x	0.1387	0.1971	0.2298	0.1854
			y	0.8148	0.6703	0.6507	0.7867
C	531.0	537.0	x	0.1625	0.2138	0.2454	0.2077
			y	0.8012	0.6609	0.6397	0.7711

Tolerance of each bin limit is ± 1 nm

Blue Color Bin Table

Bin ID	Min Dom	Max Dom	Corner Point	1	2	3	4
A	465.0	469.0	x	0.1355	0.1751	0.168	0.127
			y	0.0399	0.0986	0.1094	0.053
B	467.0	471.0	x	0.1314	0.1718	0.1638	0.122
			y	0.0459	0.1034	0.1167	0.063
C	469.0	473.0	x	0.1267	0.168	0.1593	0.116
			y	0.0534	0.1094	0.1255	0.074
D	471.0	475.0	x	0.1215	0.1638	0.1543	0.1096
			y	0.0626	0.1167	0.1361	0.0868
E	473.0	477.0	x	0.1158	0.1593	0.1489	0.1028
			y	0.0736	0.1255	0.1490	0.1029

Tolerance of each bin limit is ± 1 nm

Packaging Option (X_5)

Option	Test Current	Reel Size
2	20mA	7 inch

chanhvinh.com

Handling Precaution

The encapsulation material of the LED is made of silicone for better product reliability. Since silicone is a soft material, avoid pressing on the silicon or poking the silicon with a sharp object as the product could be damaged and cause premature failure. During assembly handling, the unit should be held by the body only. Please refer to Avago Application Note AN 5288 for additional handling information and proper procedures.

Moisture Sensitivity

This product has a Moisture Sensitive Level 2a rating per JEDEC J-STD-020. Refer to Avago Application Note AN5305, *Handling of Moisture Sensitive Surface Mount Devices, for* additional details and a review of proper handling procedures.

A. Storage before use

- An Unopened moisture barrier bag (MBB) can be stored at <40°C/90%RH for 12 months. If the actual shelf life has exceeded 12 months and the humidity Indicator Card (HIC) indicates that baking is not required, then it is safe to reflow the LEDs per the original MSL rating.
- It is recommended that the MBB not be opened prior to assembly (e.g. for IQC).

B. Control after opening the MBB

- The humidity indicator card (HIC) shall be read immediately upon opening of MBB.
- The LEDs must be kept at <30°C/60%RH at all times and all high temperature related processes including soldering, curing or rework need to be completed within 672 hours.

C. Control for unfinished reel

- Unused LEDs must be stored in a sealed MBB with desiccant or desiccator at <5%RH.

D. Control of assembled boards

- If the PCB soldered with the LEDs is to be subjected to other high temperature processes, the PCB need to be stored in sealed MBB with desiccant or desiccator at <5%RH to ensure that all LEDs have not exceeded their floor life of 672 hours.

E. Baking is required if:

- The HIC indicator is not BROWN at 10% and is AZURE at 5%.
- The LEDs are exposed to condition of >30°C/60% RH at any time.
- The Led floor life exceeded 672hrs.

The recommended baking condition is: 60±5°C for 20hrs

DISCLAIMER: *Avago's products and software are not specifically designed, manufactured or authorized for sale as parts, components or assemblies for the planning, construction, maintenenace or direct operation of a nuclear facility or for use in medical devices or applications. Customer is solely responsible, and waives all rights to make claims against avago or its suppliers, for all loss, damage, expense or liability in connection with such use.*

For product information and a complete list of distributors, please go to our web site: **www.avagotech.com**

Avago, Avago Technologies, and the A logo are trademarks of Avago Technologies in the United States and other countries.
Data subject to change. Copyright © 2005-2011 Avago Technologies. All rights reserved.
AV02-2583EN - April 13, 2011