chanhvinh.com

ASMB-MTB0-0A3A2

PLCC-4 Tricolor Black Surface LED

Data Sheet

Lead (Pb) Free
RoHS 6 fully
compliant



Description

This family of SMT LEDs are in PLCC-4 package. A wide viewing angle together with the built in reflector drives up the intensity of light output making these LEDs suitable for use in interior electronics signs. The black top surface of the LED provides better contrast enhancement, especially in full color display.

These LEDs are compatible with reflow soldering process. For easy pick & place, the LEDs are shipped in tape and reel. Every reel is shipped from a single intensity and color bin except red color for better uniformity.

Features

- Standard PLCC-4 package (Plastic Leaded Chip Carrier)
- LED package with diffused silicone encapsulation
- Using AlInGaP and InGaN dice technologies
- Typical viewing angle at 115°
- Compatible with reflow soldering process
- JEDEC MSL 3

Applications

- Indoor full color display

CAUTION: *LEDs are ESD-sensitive. Please observe appropriate precautions during handling and processing. Refer to Avago Application Note AN-1142 for additional details.*

chanhvinh.com

Package Dimensions

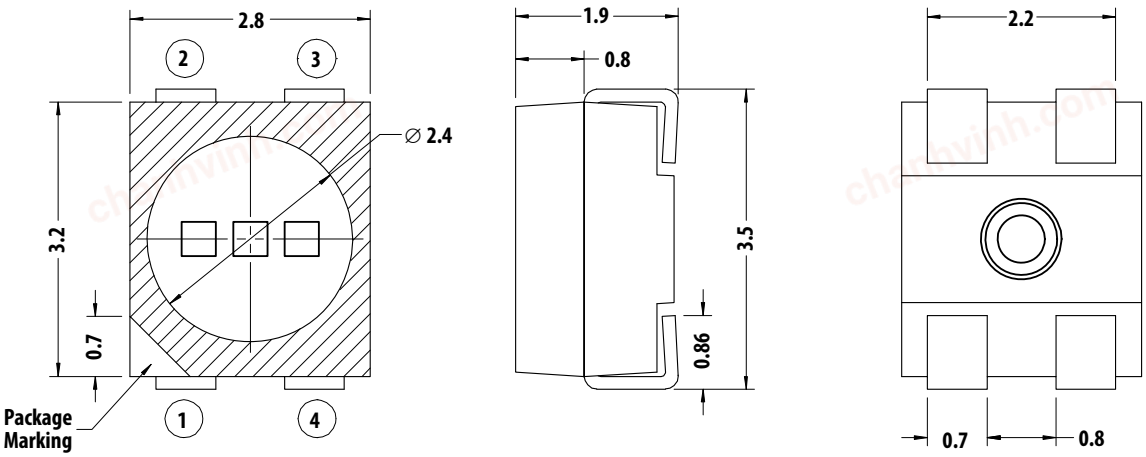

Lead Configuration	
1	Common Anode
2	Cathode (Blue)
3	Cathode (Green)
4	Cathode (Red)

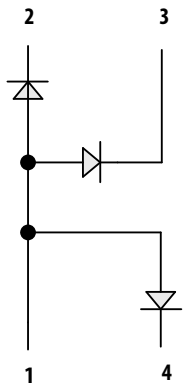

Notes:
1. All dimensions are in millimeters (mm).
2. Unless otherwise specified, tolerance = ± 0.20 mm.
3. Encapsulation = silicone
4. Terminal Finish: Silver plating

chanhvinh.com

Table 1. Absolute Maximum Ratings (T_J = 25 °C)

Parameter	Red	Green/Blue	Unit
DC Forward Current [1]	25	25	mA
Peak Forward Current [2]	100	100	mA
Power dissipation	65	90	mW
Reverse Voltage	Not recommended for reverse bias		
Junction Temperature	110		°C
Operating Temperature Range	-40 to 100		°C
Storage Temperature Range	-40 to 100		°C

Notes:
1. Derate linearly as shown in Figure 7 to Figure 10.
2. Duty factor = 10% frequency = 1 kHz.

Table 2. Optical Characteristics (T_J = 25 °C)

	Luminous Intensity, I_V (mcd) @ I_F = 20 mA [1]			Dominant Wavelength, λ_d (nm) @ I_F = 20 mA [2]			Peak Wavelength, λ_P (nm) @ I_F = 20 mA	Viewing Angle, $2\theta_{½}$ (°) [3]
Color	Min.	Typ.	Max.	Min.	Typ.	Max.	Typ.	Typ.
Red	450	540	900	619.0	625.0	629.0	634.0	115
Green	1125	1600	2240	525.0	530.0	535.0	522.0	115
Blue	285	350	560	465.0	470.0	473.0	465.0	115

Notes:
1. Luminous intensity, I_V is measured at the mechanical axis of the LED package at a single current pulse condition. The actual peak of the spatial radiation pattern may not be aligned with the axis.
2. Dominant wavelength is derived from the CIE Chromaticity Diagram and represents the perceived color of the device.
3. $\theta_{1/2}$ is the off-axis angle where the luminous intensity is ½ of the peak intensity.

Table 3. Electrical Characteristics (T_J = 25 °C)

Color	Forward Voltage, V_F (V) @ I_F = 20 mA [1]			Reverse Voltage, V_R (V) @ I_R = 100 μA [2]	Reverse Voltage, V_R (V) @ I_R = 10 μA [2]	Thermal Resistance, $R_{\theta J\text{-}S}$ (°C/W)	
	Min.	Typ.	Max.	Min.	Min.	Single chip on	Three chips on
Red	1.8	2.1	2.6	4.0	-	609	653
Green	2.8	3.1	3.6	-	4.0	320	430
Blue	2.8	3.1	3.6	-	4.0	320	430

Notes:
1. Tolerance = ± 0.1 V.
2. Indicates product final testing condition. Long-term reverse bias is not recommended.

chanhvinh.com

Part Numbering System

A	S	M	B	-	M	T	B	0	-	0	A	3	A	2
							x1				x2	x3	x4	x5

Code	Description	Option		
x1	Package type	B	Black surface	Note: MTB0 is Marveled V2
x2	Minimum intensity bin	A	Red: bin U1	Red: bin U1, U2, V1 Green: bin W1, W2, X1 Blue: bin T1, T2, U1
			Green: bin W1	
			Blue: bin T1	
x3	Number of intensity bins	3	3 intensity bins from minimum	
x4	Color bin combination	A	Red: full distribution	
			Green: bin A, B, D	
			Blue: bin A, B, C	
x5	Test option	2	Test current = 20 mA	

Table 4. Bin Information

Intensity Bins (CAT)

	Luminous intensity (mcd)	
Bin ID	Min.	Max.
T1	285.0	355.0
T2	355.0	450.0
U1	450.0	560.0
U2	560.0	715.0
V1	715.0	900.0
V2	900.0	1125.0
W1	1125.0	1400.0
W2	1400.0	1800.0
X1	1800.0	2240.0

Tolerance: ±12%

Color Bins (BIN) – Blue

	Dominant Wavelength (nm)		Chromaticity coordinate (for reference)	
Bin ID	Min.	Max.	Cx	Cy
A	465.0	469.0	0.1355	0.0399
			0.1751	0.0986
			0.1680	0.1094
			0.1267	0.0534
B	467.0	471.0	0.1314	0.0459
			0.1718	0.1034
			0.1638	0.1167
			0.1215	0.0626
C	469.0	473.0	0.1267	0.0534
			0.1680	0.1094
			0.1593	0.1255
			0.1158	0.0736

Tolerance: ±1 nm

Color Bins (BIN) – Green

	Dominant Wavelength (nm)		Chromaticity Coordinate (for reference)	
Bin ID	Min.	Max.	Cx	Cy
A	525.0	531.0	0.1142	0.8262
			0.1624	0.7178
			0.2001	0.6983
			0.1625	0.8012
B	528.0	534.0	0.1387	0.8148
			0.1815	0.7089
			0.2179	0.6870
			0.1854	0.7867
D	531.0	535.0	0.1625	0.8012
			0.2001	0.6983
			0.2238	0.6830
			0.1929	0.7816

Tolerance: ± 1 nm

Color Bins (BIN) – Red

	Dominant Wavelength (nm)		Chromaticity Coordinate (for reference)	
Bin ID	Min.	Max.	Cx	Cy
--	619.0	629.0	0.6894	0.3104
			0.6752	0.3113
			0.6916	0.2950
			0.7066	0.2934

Tolerance: ±1 nm

chanhvinh.com

Characteristics

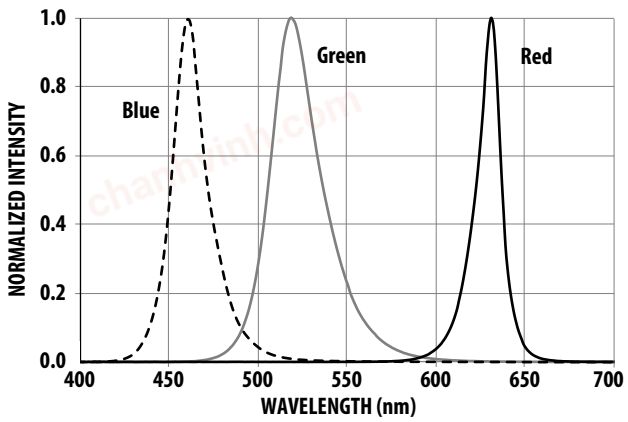

Figure 1. Relative Intensity vs. Wavelength

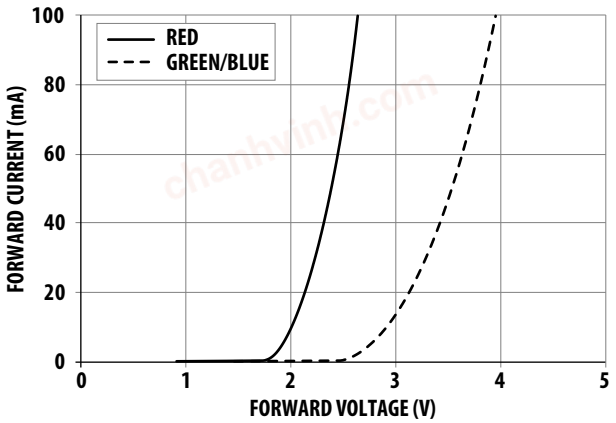

Figure 2. Forward Current vs. Forward Voltage

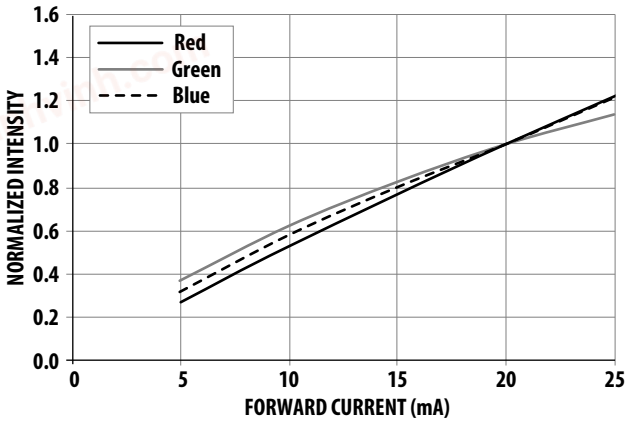

Figure 3. Relative Luminous Intensity vs. Forward Current

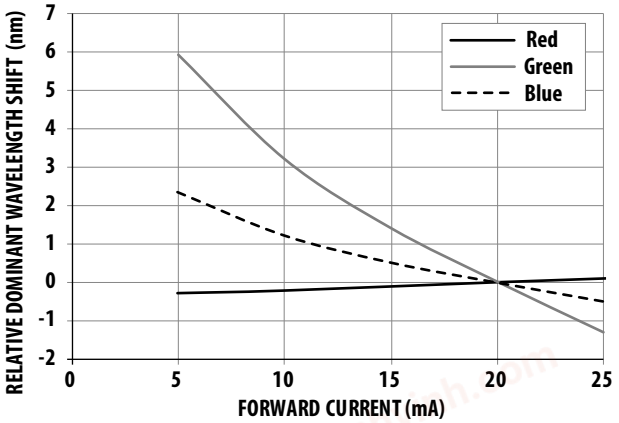

Figure 4. Dominant Wavelength Shift vs. Forward Current

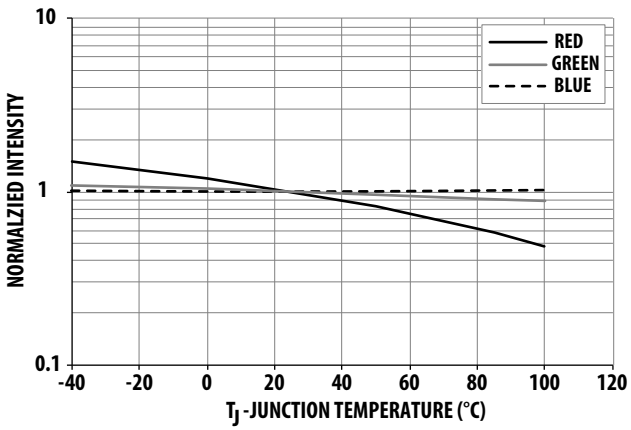

Figure 5. Relative Luminous Flux vs. Junction Temperature

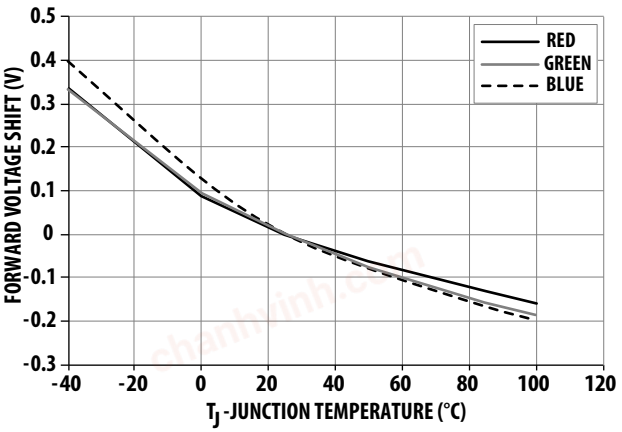

Figure 6. Forward Voltage Shift vs. Junction Temperature

chanhvinh.com

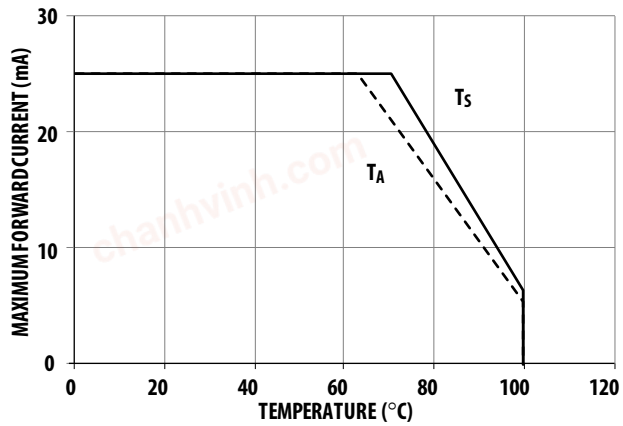

Figure 7. Maximum Forward Current vs. Temperature For Red (1 Chip On)

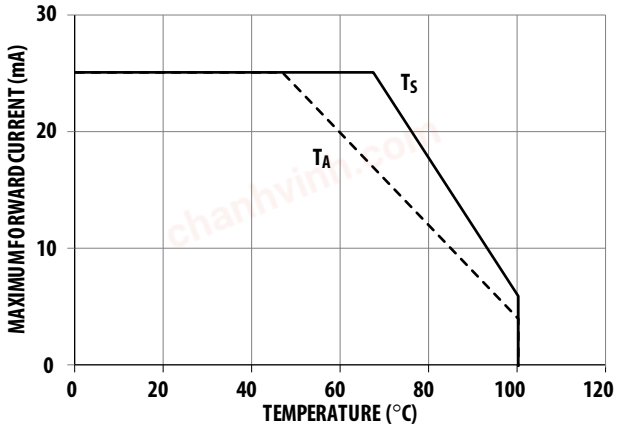

Figure 8. Maximum Forward Current vs. Temperature For Red (3 Chips On)

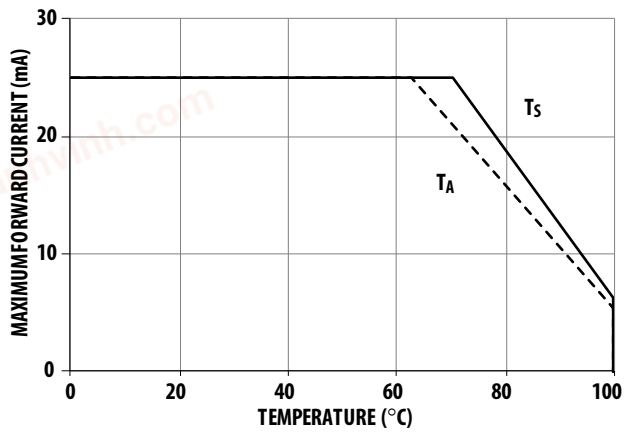

Figure 9. Maximum Forward Current vs. Temperature for Green & Blue (1 Chip On)

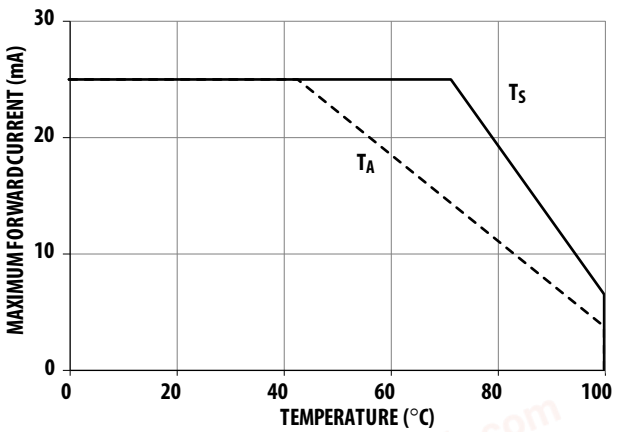

Figure 10. Maximum Forward Current vs. Temperature for Green & Blue (3 Chips On)

Note:
Maximum forward current graphs based on ambient temperature, T_A are with reference to thermal resistance $R\theta_{J\text{-}A}$ (see below).
For more details, see Precautionary Notes, item 4.

Condition	Thermal resistance from LED junction to ambient, $R\theta_{J\text{-}A}$ (°C/W)	
	Red	Green & Blue
1 chip on	725	454
3 chips on	970	747

chanhvinh.com

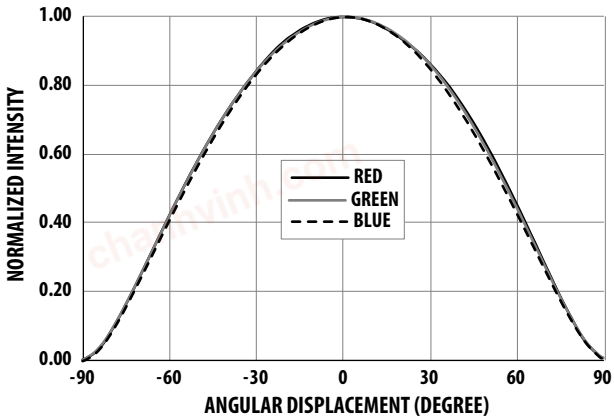

Figure 11a. Radiation pattern along x-axis of the package

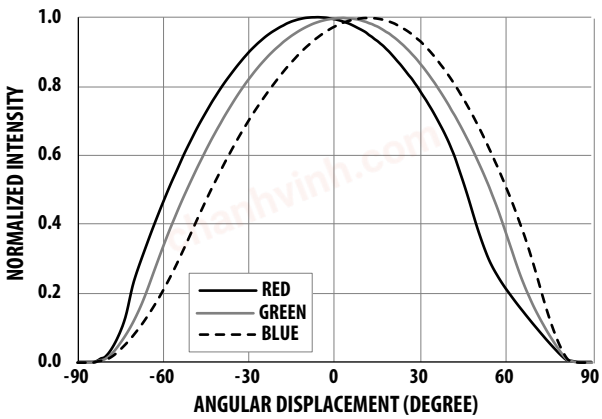

Figure 11b. Radiation pattern along y-axis of the package

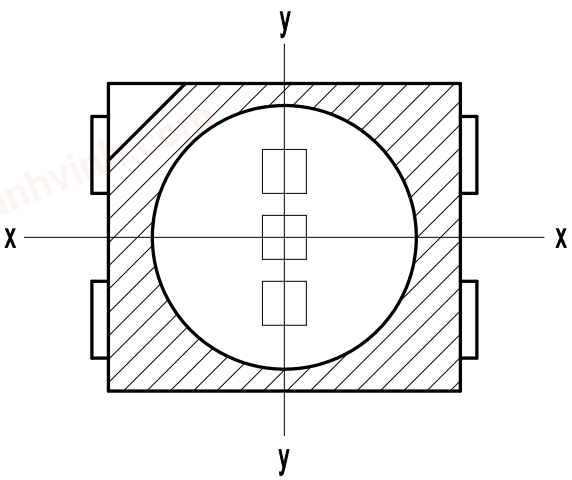

Figure 11c. Illustration of package axis for radiation pattern

chanhvinh.com

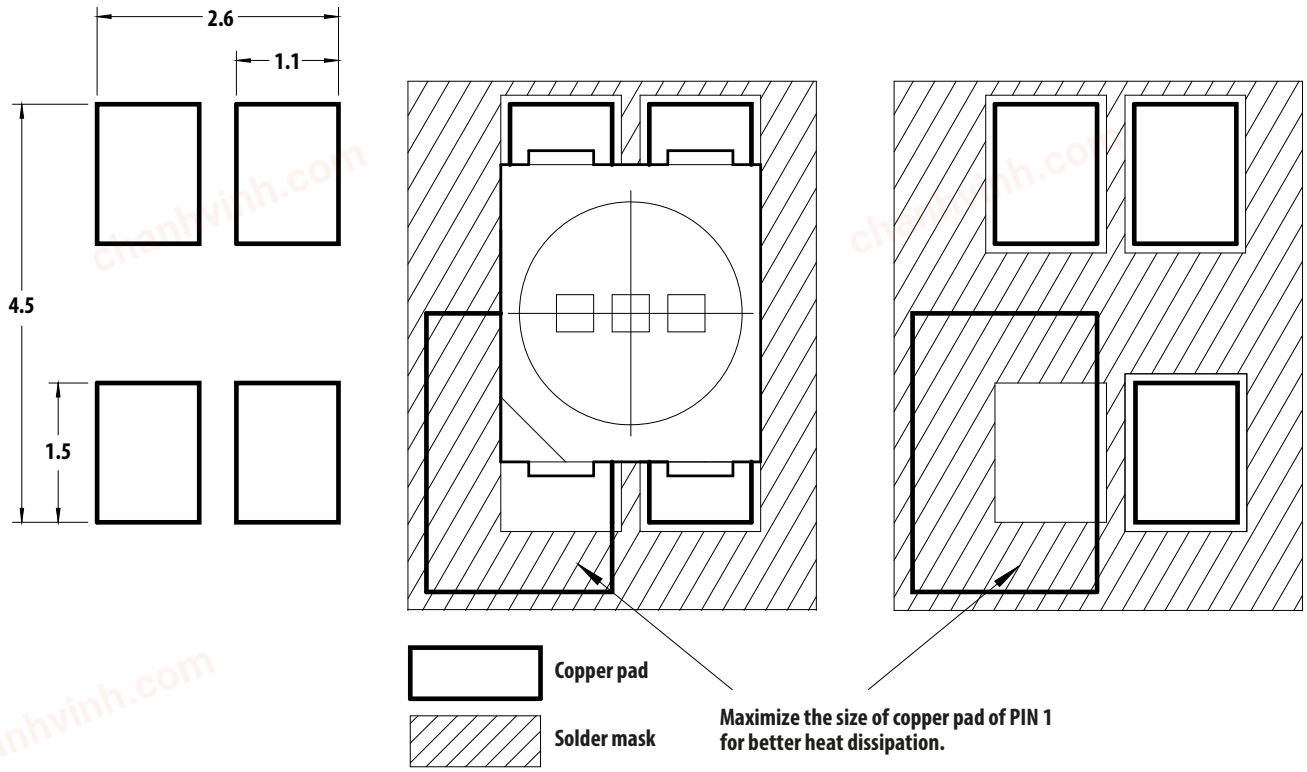

Figure 12. Recommended soldering land pattern

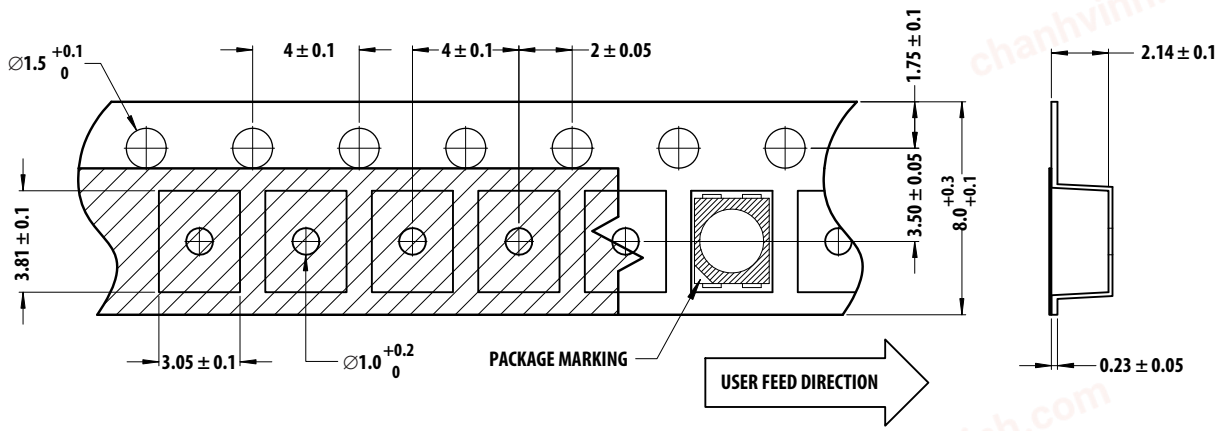

Figure 13. Carrier Tape Dimension

chanhvinh.com

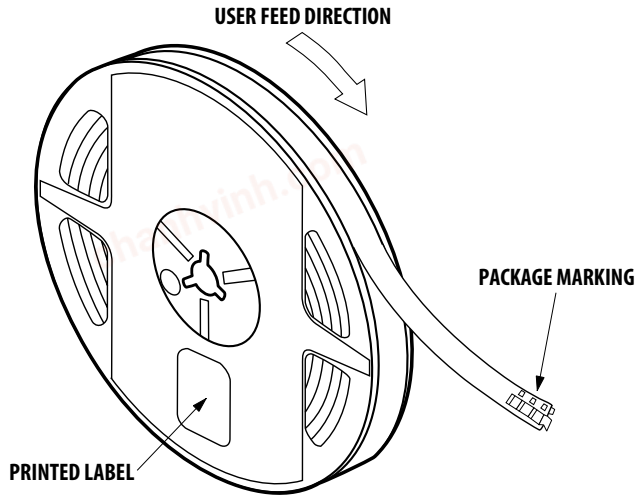

Figure 14. Reel Orientation

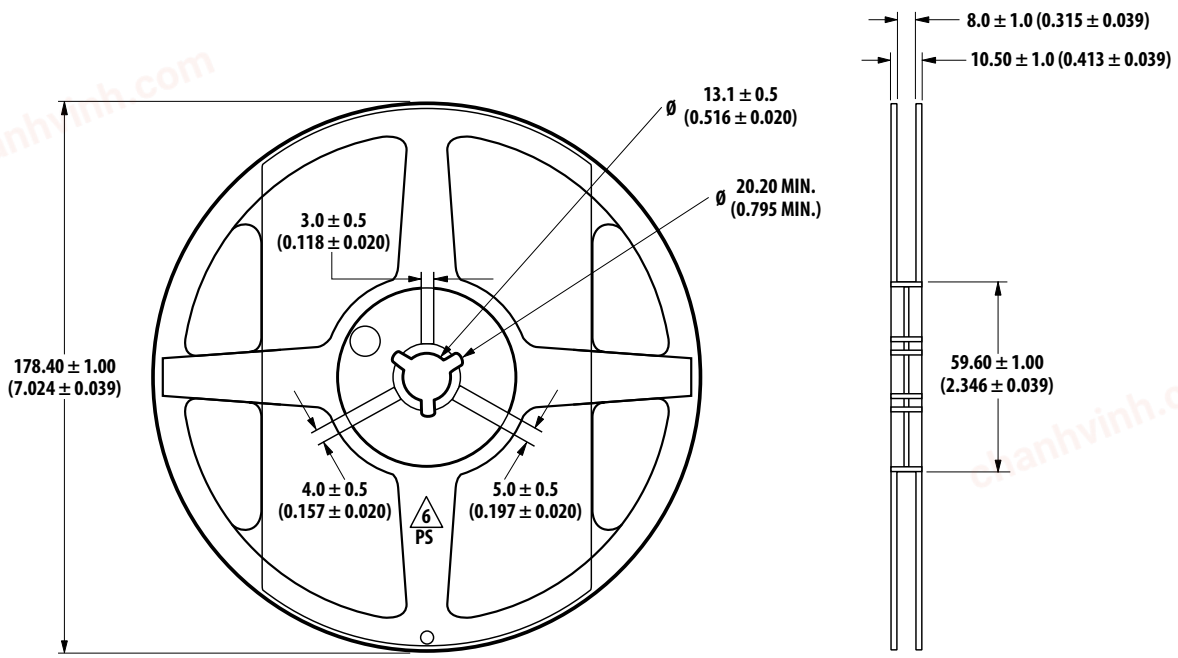

Figure 15. Reel Dimension

chanhvinh.com

Packing Label

(i) Standard label (attached on moisture barrier bag)



(ii) Baby label (attached on plastic reel)

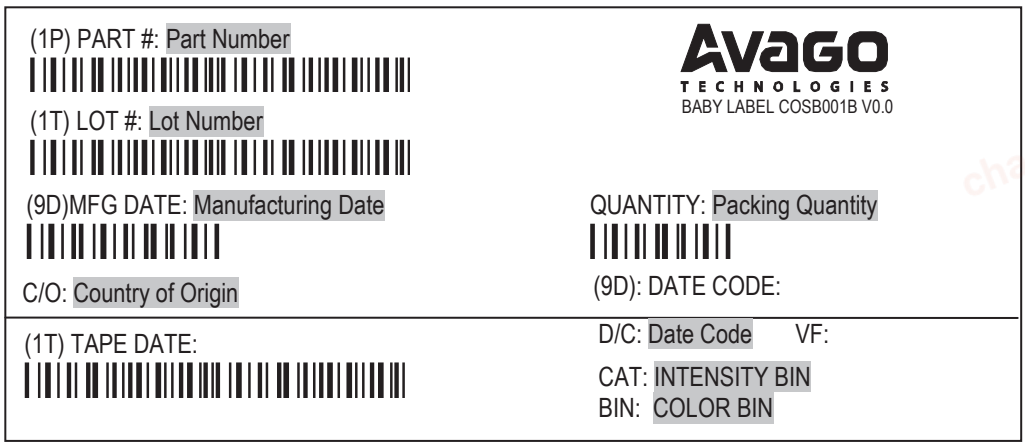

Example of luminous intensity (Iv) bin information on label:

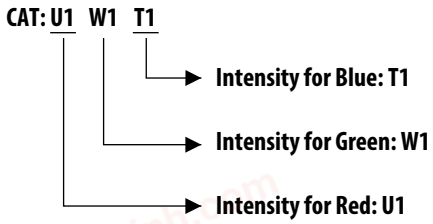

Example of color bin information on label:

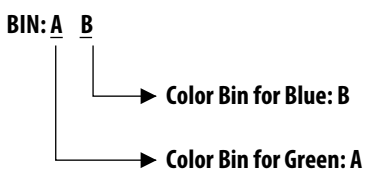

Note:
There is no color bin ID for Red as there is only one range, as stated in Table 4.

chanhvinh.com

Soldering

Recommended reflow soldering condition:

(i) Leaded reflow soldering:

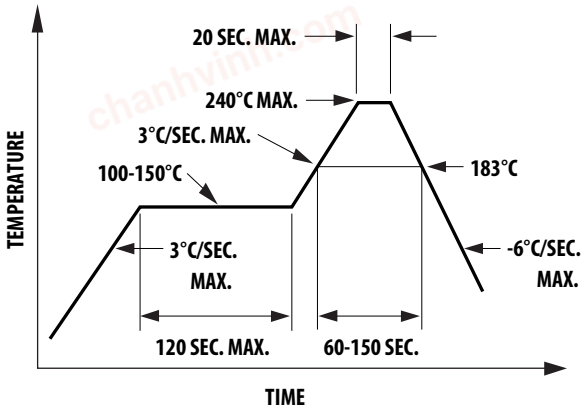

(ii) Lead-free reflow soldering:

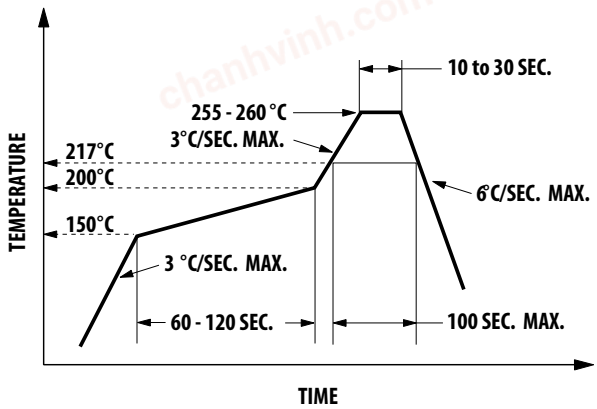

a. Reflow soldering must not be done more than two times. Make sure you take the necessary precautions for handling a moisture-sensitive device, as stated in the following section.

b. Recommended board reflow direction:

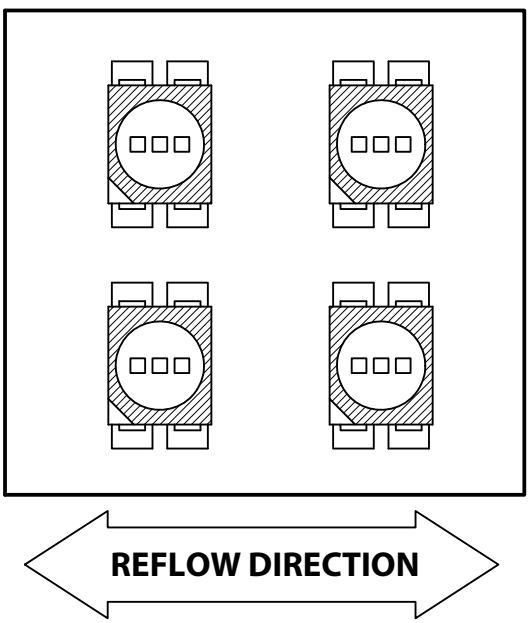

c. Do not apply any pressure or force on the LED during reflow and after reflow when the LED is still hot.

d. It is preferred that you use reflow soldering to solder the LED. Use hand soldering only for rework if unavoidable but must be strictly controlled to the following conditions:
   - Soldering iron tip temperature = 320 °C max.
   - Soldering duration = 3 sec max.
   - Number of cycles = 1 only
   - Power of soldering iron = 50 W max.

e. Do not touch the LED body with a hot soldering iron except the soldering terminals as this may damage the LED.

f. For de-soldering, it is recommended that you use a double flat tip.

g. Please confirm beforehand whether the functionality and performance of the LED is affected by hand soldering.

chanhvinh.com

PRECAUTIONARY NOTES

1. Handling precautions

The encapsulation material of the LED is made of silicone for better product reliability. Compared to epoxy encapsulant, which is hard and brittle, silicone is softer and flexible. Observe special handling precautions during assembly of silicone-encapsulated LED products. Failure to comply might lead to damage and premature failure of the LED. For more information, refer to Application Note AN5288, Silicone Encapsulation for LED: *Advantages and Handling Precautions*.

a. Do not poke sharp objects into the silicone encapsulant. Sharp objects such as tweezers and syringes might cause excessive force to be applied or even pierce through the silicone, inducing failures in the LED die or wire bond.

b. Do not touch the silicone encapsulant. Uncontrolled force acting on the silicone encapsulant might result in excessive stress on the wire bond. The LED should be held only by the body.

c. Do no stack assembled PCBs together. Use an appropriate rack to hold the PCBs.

d. The surface of silicone material attracts more dust and dirt compared to epoxy due to its surface tackiness. To remove foreign particles on the surface of silicone, a cotton bud can be used with isopropyl alcohol (IPA). During cleaning, rub the surface gently without applying excessive pressure on the silicone. Ultrasonic cleaning is not recommended.

e. For automated pick and place, Avago has tested the following nozzle size to work fine with this LED. However, due to possible variations in other parameters such as pick and place machine maker/model and other settings of the machine, it is recommended that you verify that the nozzle selected will not damage the LED.

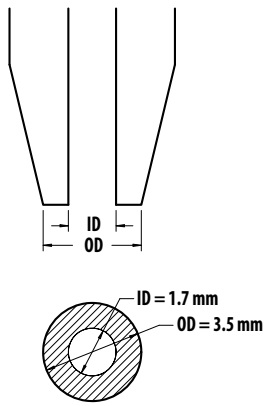

2. Handling of moisture-sensitive device

This product has a Moisture Sensitive Level 3 rating per JEDEC J-STD-020. Refer to Avago Application Note AN5305, *Handling of Moisture Sensitive Surface Mount Devices*, for additional details and a review of proper handling procedures.

a. Before use

- An unopened moisture barrier bag (MBB) can be stored at < 40 °C/90% RH for 12 months. If the actual shelf life has exceeded 12 months and the Humidity Indicator Card (HIC) indicates that baking is not required, then it is safe to reflow the LEDs per the original MSL rating.
- It is recommended that the MBB not be opened before assembly (e.g., for IQC).

b. Control after opening the MBB

- Read the HIC immediately upon opening the MBB.
- The LEDs must be kept at < 30 °C/60% RH at all times and all high temperature related processes including soldering, curing or rework must be completed within 168 hours.

c. Control for unfinished reel

- Unused LEDs must be stored in a sealed MBB with desiccant or desiccator at < 5% RH.

d. Control of assembled boards

- If the PCB soldered with the LEDs is to be subjected to other high temperature processes, then the PCB must be stored in a sealed MBB with desiccant or desiccator at < 5% RH to ensure that all LEDs have not exceeded their floor life of 168 hours.

e. Baking is required if:

- The HIC indicator is not BROWN at 10% and is AZURE at 5%.
- The LEDs are exposed to a condition of > 30 °C/60% RH at any time.
- The LED floor life exceeded 168 hours.

The recommended baking condition is: 60 ± 5 °C for 20 hours.

Baking should be done only once.

f. Storage

- The soldering terminals of these Avago LEDs are silver-plated. If the LEDs are exposed in ambient environment for too long, the silver plating might be oxidized and thus affect its solderability performance. As such, unused LEDs must be kept in a sealed MBB with desiccant or in desiccator at < 5% RH.

chanhvinh.com

3. Application precautions

a. Drive current of the LED must not exceed the maximum allowable limit across temperature as stated in the datasheet. Constant current driving is recommended to ensure consistent performance.

b. The LED is not intended for reverse bias. Do use other appropriate components for such a purpose. When driving the LED in matrix form, make sure the reverse bias voltage does not exceed the allowable limit for the LED.

c. Do not use the LED in the vicinity of material with sulfur content, in an environment of high gaseous sulfur compound and corrosive elements. Examples of materials that may contain sulfur are rubber gasket, Room Temperature Vulcanizing (RTV) silicone rubber, rubber gloves, and so on. Prolonged exposure to such an environment may affect the optical characteristics and product life.

d. Avoid a rapid change in ambient temperature especially in a high humidity environment as this will cause condensation on the LED.

4. Thermal management

Optical, electrical and reliability characteristics of LED are affected by temperature. The junction temperature (T_J) of the LED must be kept below the allowable limit at all times. T_J can be calculated as follows:

$$T_J = T_A + R_{\theta J\text{-}A} \times I_F \times V_{Fmax}$$

where

T_A = ambient temperature [°C]

$R_{\theta J\text{-}A}$ = thermal resistance from LED junction to ambient [°C/W]

I_F = forward current [A]

V_{Fmax} = maximum forward voltage [V]

The complication of using this formula lies in T_A and $R_{\theta J\text{-}A}$. Actual T_A is sometimes subjective and hard to determine. $R_{\theta J\text{-}A}$ varies from system to system depending on design and is usually not known.

Another way of calculating T_J is by using solder point temperature T_S as shown as follows:

$$T_J = T_S + R_{\theta J\text{-}S} \times I_F \times V_{Fmax}$$

where

T_S = LED solder point temperature as shown in the following illustration [°C]

$R_{\theta J\text{-}S}$ = thermal resistance from junction to solder point [°C/W]

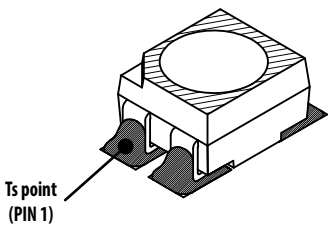

T_S can be easily measured by having a thermocouple mounted on the soldering joint, as shown in this illustration, while $R_{\theta J\text{-}S}$ is provided in the datasheet. Please verify the T_S of the LED in the final product to ensure that the LEDs are operated within all maximum ratings stated in the datasheet.

5. Eye safety precautions

LEDs may pose optical hazards when in operation. It is not advisable to view directly at operating LEDs as it may be harmful to the eyes. For safety reasons, use appropriate shielding or personal protective equipment.

DISCLAIMER: *Avago's products and software are not specifically designed, manufactured or authorized for sale as parts, components or assemblies for the planning, construction, maintenenace or direct operation of a nuclear facility or for use in medical devices or applications. Customer is solely responsible, and waives all rights to make claims against Avago or its suppliers, for all loss, damage, expense or liability in connection with such use.*

Avago, Avago Technologies, and the A logo are trademarks of Avago Technologies in the United States and other countries.
Data subject to change. Copyright © 2005-2015 Avago Technologies. All rights reserved.
AV02-4186EN - May 21, 2015