chanhvinh.com

BROADCOM®

Data Sheet

AR49-M49M/M25S Series

Absolute Reflective Encoder Module with Energy-Harvesting Multi-Turn Counter

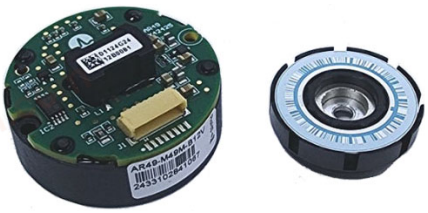

Description

The Broadcom® AR49 series is an optical absolute encoder module that offers up to 25-bit single-turn (ST) position information and 24-bit multi-turn (MT) counts, hence a combined 49-bit high-resolution output. The ST block of the encoder consists of a patterned disk, a light source, and photosensitive elements to translate the mechanical motion into an electrical signal. The encoder is designed with a selection of serial communication protocols, with a dedicated electronic circuit designed for robust signal communication.

Broadcom AR49 series encoders offer many intelligent features, such as Built-In Temperature Sensor, User Programmable Resolution, Zero Reset, System Alarm, and more. They come with a recommended high-temperature range of –40°C to 115°C. One of the key advantages is their multi-turn tracking, which employs a proprietary energy-harvesting (EH) technology by harvesting the magnetic energy while the patterned disk with magnet rotates. The counter ASIC harvests the energy generated by the EH sensor for processing the rotational count and generates counting logic to non-volatile memory, which updates and stores the count.

The entire operation of energy generation, counting, and storage processing is completed with limited energy and a short duration; hence, the kit encoder is suited for both low-speed and high-speed measurement.

Features and Benefits

- 24-bit energy-harvesting multi-turn and 25-bit optical single-turn
- Accuracy upon calibration of ±30 arc-seconds
- Encoder fault and status bits with CRC
- Integrated differential transceiver for the SSI/BiSS-C/RS485 communication protocols
- Single-ended Serial Protocol Interface (SPI 4-wire option)
- Overall encoder outer diameter of Ø35 mm and maximum height of 17.5 mm
- 8K bits of user-accessible memory in EEPROM
- Immediate position detection on power-up; no battery or capacitor required for position detection during a power failure
- RoHS compliant

Applications

- AC/DC servo motor feedback
- Medical and laboratory equipment
- Robotics
- Factory automation

NOTE: The AR49 series encoders are not halogen-free products.

CAUTION! This product is not specifically designed or manufactured for use in any specific devices. Customers are solely responsible for determining the suitability of the product for its intended application and solely liable for all loss, damage, expense, or liability in connection with such use. Contact Broadcom for further inquiry.

chanhvinh.com

Product Specifications

Table 1: Absolute Maximum Ratings[a]

Parameters	Symbol	Min.	Max.	Units	Notes
Storage Temperature	T_S	–40	125	°C	—
Operating Temperature[b]	T_a	–40	115	°C	—
Supply Voltage	V_{DD}	–0.3	6.5	V	—
Electrostatic Discharge Immunity, ESD	—	–8k	+8k	V	Contact discharge
	—	–12k	+12k	V	Air discharge
Electrical Fast Transient/Burst Immunity, EFT	—	–2k	+2k	V	5 minutes, 5 kHz
Permissible Speed[c]	—	—	12,000	RPM	—
Relative Humidity	RH	—	90	%	T = 60°C (non-condensing)
Single-Turn Resolution	—	15	25	bit	15 to 25 bits
Multi-Turn Resolution	—	0	24	bit	12, 14, 16, 18, 20, 22, and 24 bits
Transmission Length[d]	—	—	25	meter	SSI/BiSS-C/RS485 differential line

a. Exposure to absolute maximum rating conditions for extended periods can affect reliability. Stress greater than the absolute maximum rating can cause permanent damage to the device.

b. The maximum junction temperature of the PCB shall not exceed 125°C.

c. The encoder works reliably up until this permissible speed.

d. A twisted-pair shielded cable is recommended for robustness against environmental noise. Frame ground (FG) termination near the motor frame is recommended.

Table 2: Electrical Characteristics

DC characteristics over the recommended operating conditions of V_{DD} 4.5V to 5.5V, T_a = –40°C to 115°C.

Parameters	Symbol	Min.	Typ.	Max.	Unit	Notes
Supply Voltage	V_{DD}	4.5	5.0	5.5	V	—
Supply Current	I_{DD}	50	60	100	mA	BiSS/SSI/SPI4 options
			68			RS485 option (with oscillator)
Power on Standby	—	—	—	500	ms	—
Protocol I/O Drive Strength	I_{DIO}	5	20	40	mA	Differential driver
Electrically Permissible Speed	—	–12,000	—	+12,000	RPM	—
Differential Transceiver						
Hysteresis Voltage	V_{hys}	—	100	—	mV	220Ω termination
Opening Voltage	V_{open}	200	—	—	mV	—
Peak-Peak Voltage	V_{PP}	—	2	—	V	—
I/O Line (SPI Single-Ended)						
Output High Voltage	V_{OH}	4.4	—	—	V	No load (V_{DD} = 5V)
Output Low Voltage	V_{OL}	—	—	0.5	V	—
Input High Voltage	V_{IH}	2.8	—	5.5	V	—
Input Low Voltage	V_{IL}	0	—	1.8	V	—

chanhvinh.com

Table 3: Mechanical and Environmental Specifications

Mechanical characteristics over the recommended operating conditions of V_{DD} 4.5V to 5.5V, T_a = –40°C to 115°C.

Parameters	Conditions	Min.	Typ.	Max.	Units
Storage Temperature	—	–40	—	125	°C
Operating Temperature[a]	—	–40	—	115	°C
Encoder Accuracy[b]	With reference encoder correction, T_a = 25°C	—	±30	—	Arc-sec
Mechanical Permissible Speed	—	–12,000	—	+12,000	RPM
Relative Air Humidity (Non-Condensing)	T_a = 60°C	—	90	—	RH%
Vibration	EN 60068-2-6	—	—	30	G
Shock	EN 60068-2-27, 6 ms	—	—	100	G

a. Maximum junction temperature of the PCB shall not exceed 125°C.

b. Typical values represent the accuracy and repeatability when calibrated with a reference encoder having 10× higher accuracy than the AR49. Reference encoder ≈ 3 arc-seconds.

CAUTION! Refrain from placing the code-wheel magnet or any magnet near the EH sensor on top of the encoder assembly (maintain a storage condition <20 mT).

Table 4: General Encoder Specifications

Parameters	Notes
Default Counting Direction	Increases with counter-clockwise (CCW) code-wheel rotation; view from encoder top (Figure 1)
User-Accessible Memory Size	8K bits
Encoder Temperature	8-bit data output at 1°C resolution
Initialization Time	500 ms

Figure 1: Counting Up Direction from Top View



chanhvinh.com

Mechanical Specifications

Package Dimensions – AR49-M49M Series MT Option

Figure 2: MT Encoder Mechanical Dimensions

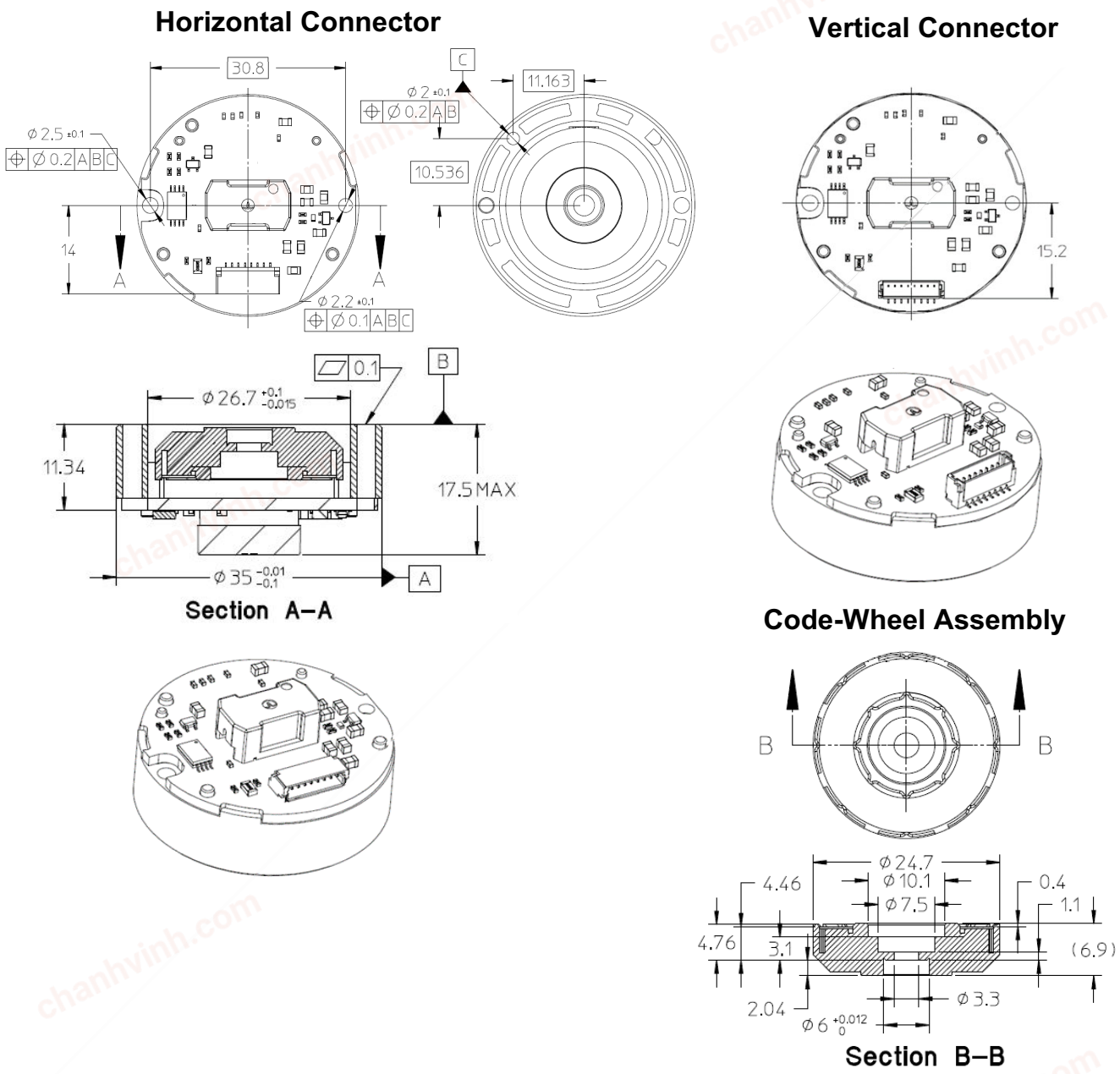

NOTE:

- Dimensions are in millimeters.
- Third angle projection.
- Motor-shaft outer diameter requirement: 6g6 (–0.004, –0.012) mm.

chanhvinh.com

Package Dimensions – AR49-M25S Series ST Option

Figure 3: ST Encoder Mechanical Dimensions

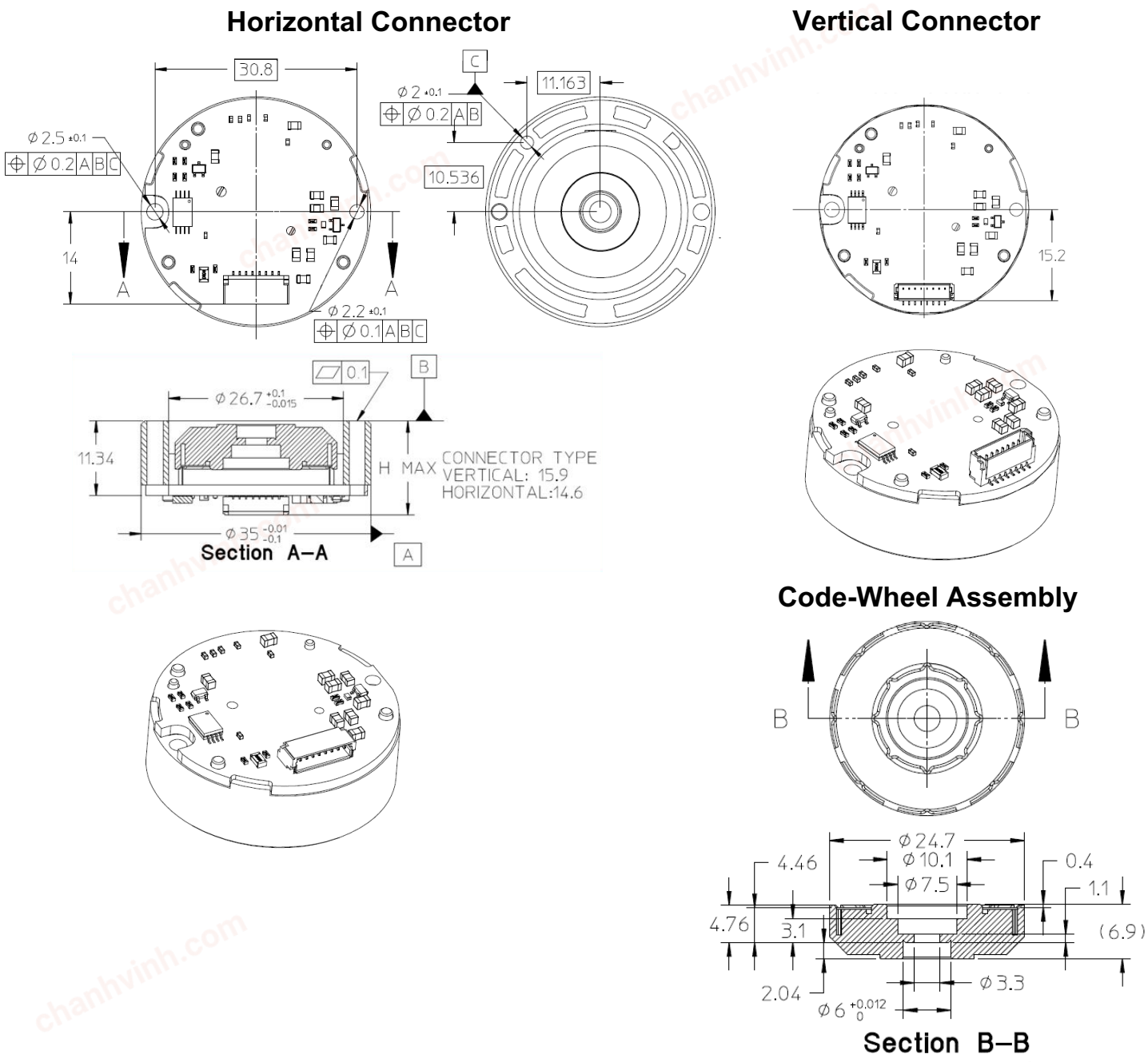

NOTE:

- Dimensions are in millimeters.
- Third angle projection.
- Motor-shaft outer diameter requirement: 6g6 (–0.004, –0.012) mm.

chanhvinh.com

Recommended Motor Mounting Dimensions

Figure 4: Mounting Dimensions When Using the Module Outer Diameter (OD) as the Position Guide

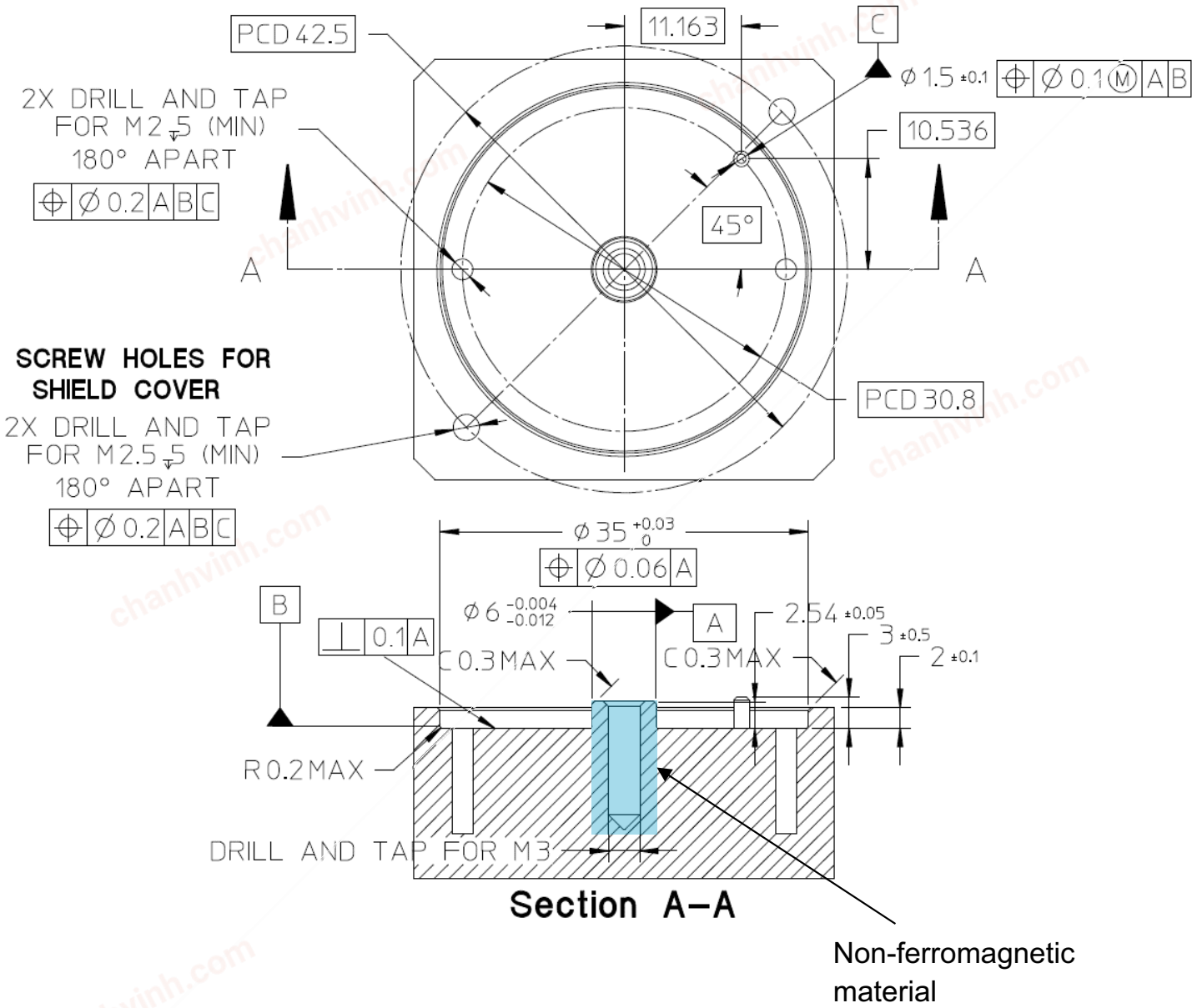

NOTE:

- Dimensions are in millimeters.
- Third angle projection.
- Use a stainless steel M3 screw to secure the code-wheel–hub assembly to the motor shaft.
- Use a screw with pre-applied thread locker.
- The motor-shaft end where the code wheel is mounted must be made of non-ferromagnetic material. Recommended motor-shaft material: SUS316L.

chanhvinh.com

Figure 5: Mounting Dimensions When Using the Module Inner Diameter (ID) as the Position Guide

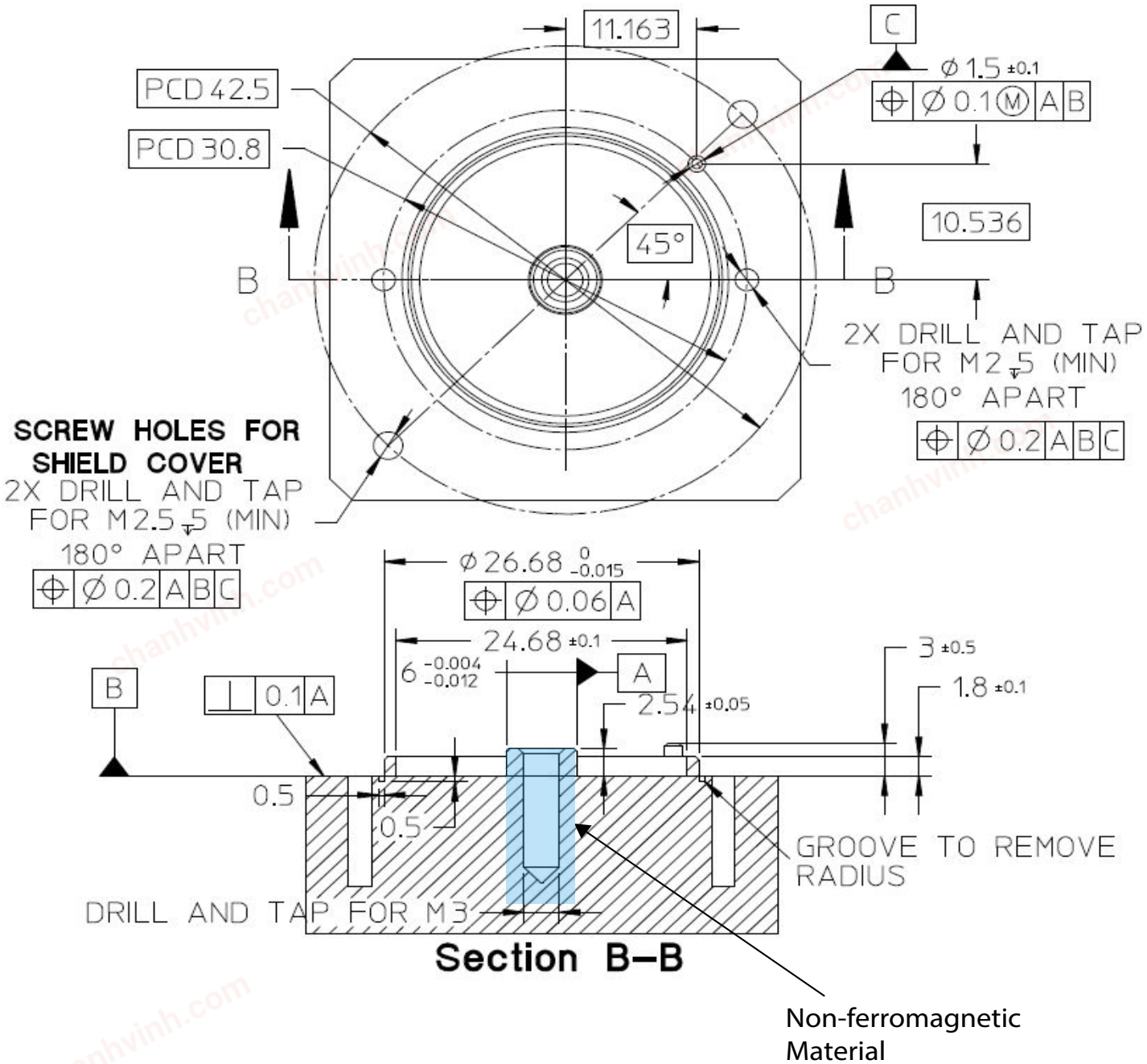

NOTE:

- Dimensions are in millimeters.
- Third angle projection.
- Use a stainless steel M3 screw to secure the code-wheel–hub assembly to the motor shaft.
- Use a screw with pre-applied thread locker.
- The motor-shaft end where the code wheel is mounted must be made of non-ferromagnetic material. Recommended motor-shaft material: SUS316L.

chanhvinh.com

Recommended Shield Cover Dimensions

To eliminate or minimize the influence of the external magnetic field interference on encoder operation, use of shielding is mandatory.

- Shield cover material requirement: Mild steel SPCC-SD, thickness 0.8 mm (minimum).
- Finishing: Ni plating 8 µm to 12 µm thick, with Cu undercoating 2 µm to 4 µm.

Figure 6: Reference Shield Cover Design

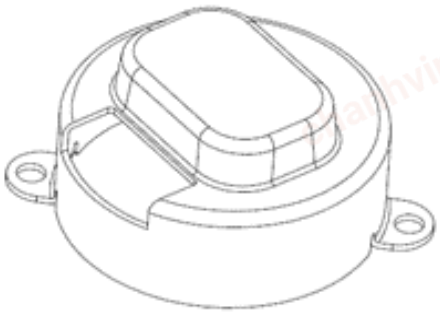

Encoder Calibration

Broadcom encoders employ an intelligent calibration method by performing auto signal optimization once the encoder is mounted within assembly tolerances. This eliminates the hassle of mechanically adjusting the encoder position to a very tight gap and mechanical center. Position accuracy correction is optional and can be carried out with a high-accuracy reference encoder, for example Broadcom's AR25-AC25 calibration station.

For initial development and early evaluation of the AR49 encoders, the versatile AR49-M49-E01 programming kit can be used to perform the basic encoder configuration and calibration process.

Figure 7: Overview of the AR49 Series Encoder Calibration Flow

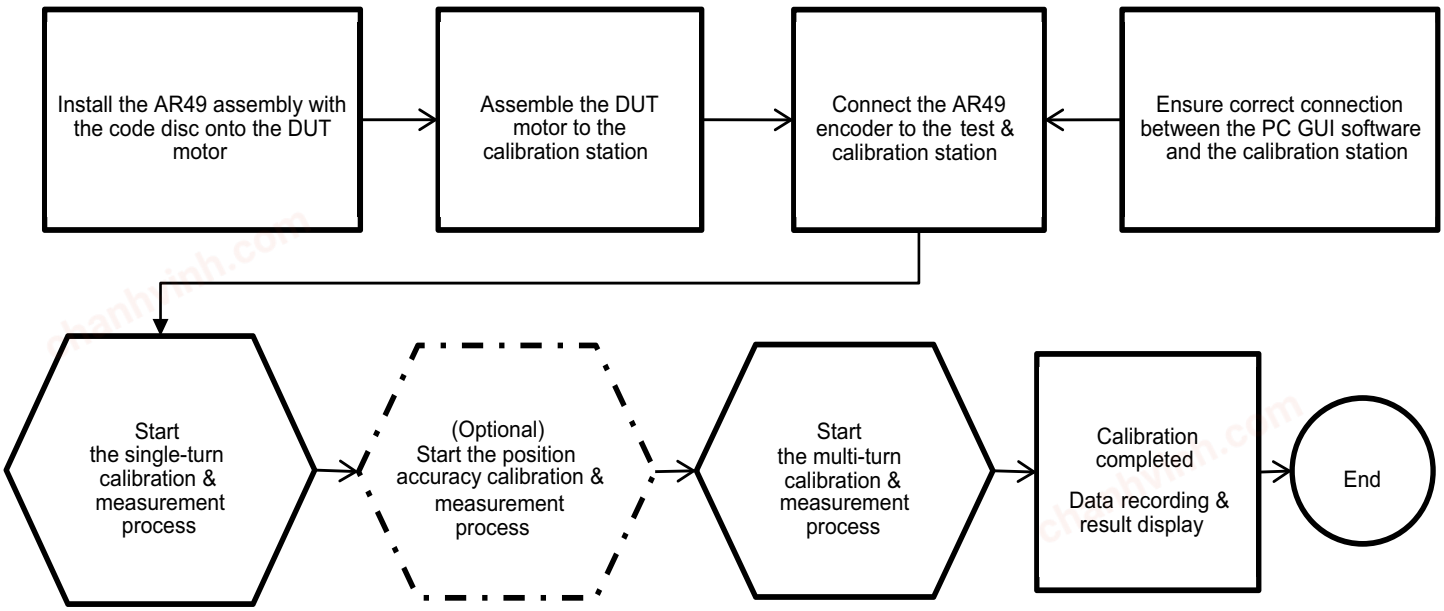

chanhvinh.com

Interface Protocol

AR49-M49M/M25S-Kxx with RS485 Half-Duplex Protocol

A one-to-one half-duplex serial communication is established between the client encoder and the host (for example, a servo driver). The communication is in a differential transmission format. The encoder will perform specific operations based on the command requests made by the host. Before the encoder executes the requested operation, an acknowledgment of the command request is necessary after first checking the start bit, information data field, and stop bit. If this check fails, the encoder will not acknowledge and execute the received command request.

Figure 8: General Transmission Frames Format on Half-Duplex Line

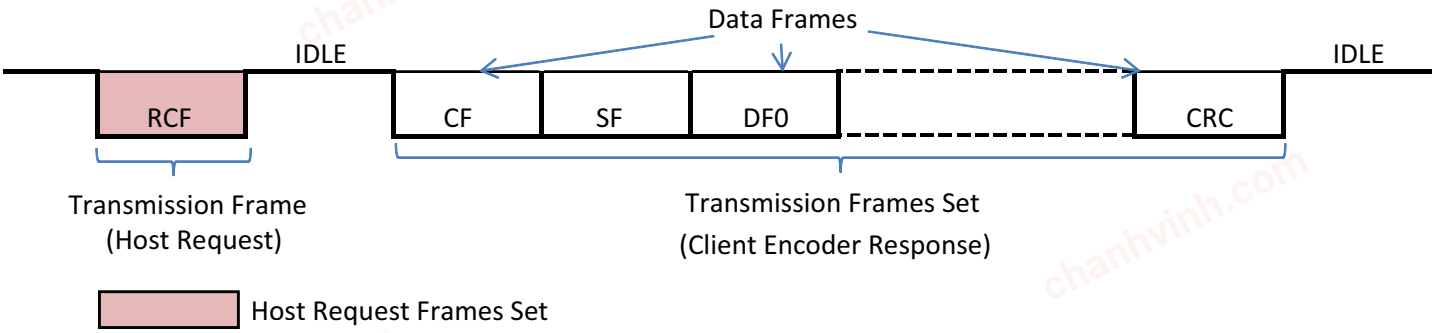

NOTE:

- **Start of transmission frames set:** Upon detecting the first logic of Low State "0" on the transmission line after an idle state, and if the following three bits conform to the sync code, the encoder will acknowledge it as a valid Request Control Field (RCF), which indicates the start of a transmission frame set. Otherwise, the encoder will continue to search for the next available logic of Low State "0".
- **End of transmission frames set:** After the command frame is detected, if there is no start bit after the end bit of the last frame read, and no subsequent frame is detected, the end of transmission frames set is concluded.
- **Idle state:** The idle state means a space between each transmission frames set and subsequent transmission frames. At the idle state, the logic of the output in the transmission line is kept to high state "1".

Table 5: RS485 Protocol Specifications

Over the recommended operating conditions of V_{DD} 4.5V to 5.5V, T_a = –40°C to 115°C.

Parameters	Conditions	Min.	Typ.	Max.	Unit	Notes
Communication Baud Rate	—	—	2.5	10	Mb/s	2.5, 5, 10 Mb/s
Frame Length	—	—	10	—	Bit/Frame	—
Cycle Time Between Frames Set Request	Command ID3	62.5	—	—	µs	2.5 Mb/s
		35	—	—	—	5 Mb/s
		20	—	—	—	10 Mb/s
Jitter	Every Frame	–100	—	100	ns	2.5 Mb/s
		–50	—	50	ns	5 Mb/s
		–25	—	25	ns	10 Mb/s

chanhvinh.com

RS485 Differential Connection

The recommended I/O connection between the encoder and the host driver has the following basic requirements:

1. Ensure that the encoder power supply, V_{CC}, is within the range of 4.5V to 5.5V.
2. For best noise immunity, use a twisted-pair shielded cable for connection to the servo driver.
3. To prevent undesirable signal reflection, terminate with 220Ω resistors.
4. Terminate the shield-wire to frame ground (FG) at both ends of the communication line.

Figure 9: RS485 Half-Duplex I/O Connection

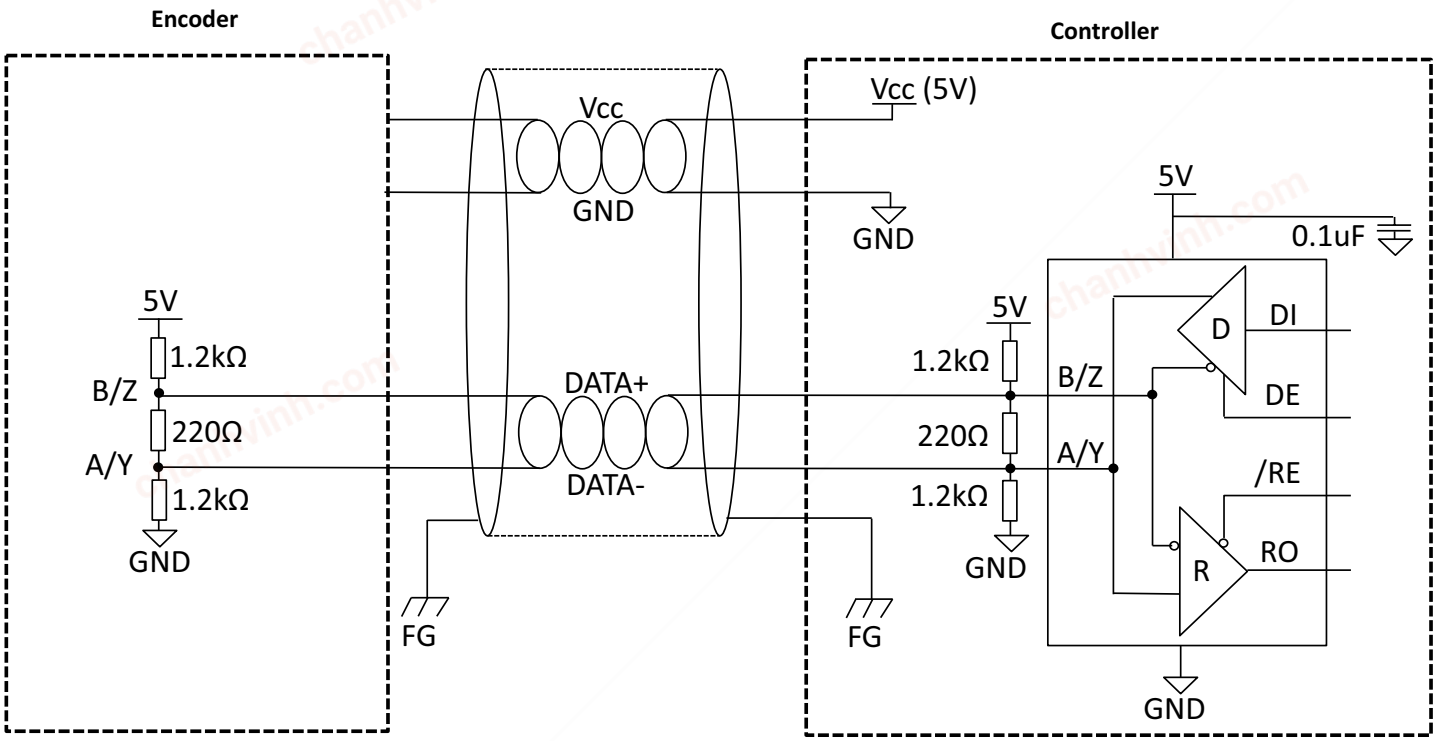

chanhvinh.com

AR49-M49M/M25S-Bxx with BiSS-C Serial Interface

Table 6: BiSS-C Timing Characteristics

Over the recommended operating conditions of V_{DD} 4.5V to 5.5V, T_a = –40°C to 115°C.

Parameters	Symbol	Condition	Min.	Typ.	Max.	Units
MA Frequency	f_{MA}	—	0.08	—	10	MHz
MA Duty	DUT_{CLK}	—	—	50	—	%
Busy Time	T_{busy}	f_{MA} = 5 MHz to 10 MHz	—	$2/f_{MA}$	—	µs
		100 kHz ≤ f_{MA} < 5 MHz	—	$1/f_{MA}$	—	
Timeout	$t_{BiSS\text{-}timeout}$	—	$1.5/f_{MA}$	—	5	µs
Frame to Frame	—	—	—	—	1	µs

Figure 10: BiSS-C Data Field and Interface Timing Diagram

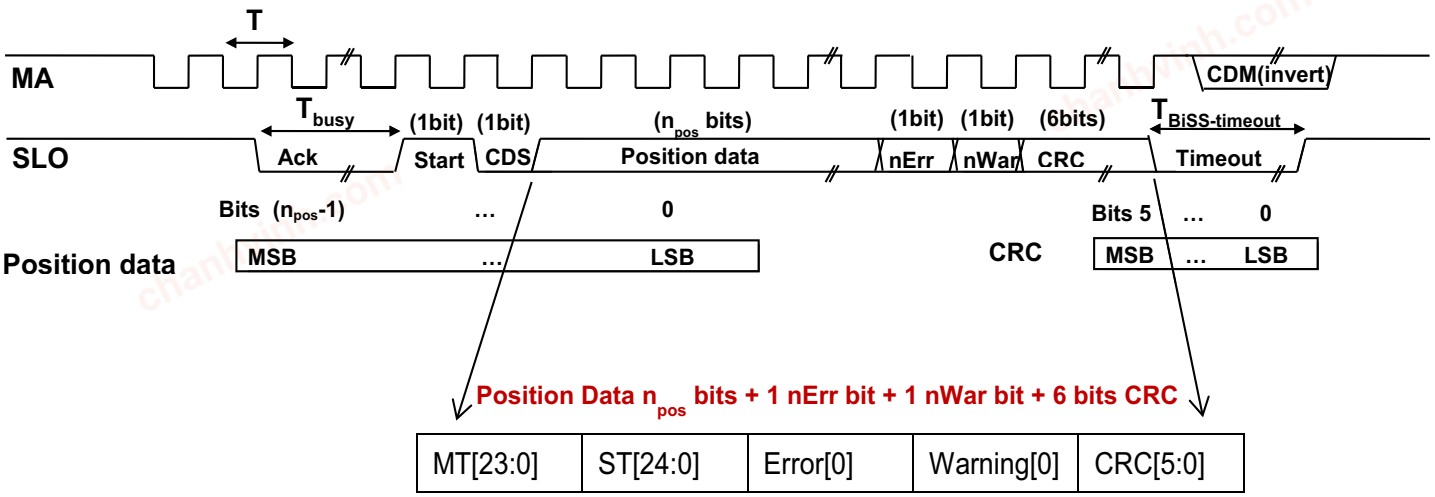

NOTE:

- CRC polynomial = Invert of ($X^6 + X^1 + X^0$).
- The nErr bit is active low. (Combines all the Error Status and reflects in the nErr bit).
- The nWar bit is active low. (Combines all the Warning Status and reflects in the nWar bit).
- The position data varies depending on the single-turn and multi-turn resolution.

The recommended I/O connection between the encoder and the host driver has the following basic requirements.

chanhvinh.com

BiSS-C Full-Duplex Connection

1. Provide the following encoder power supply:
   – For the 5.0V supply, V_{CC} should be within the range of 4.5V to 5.5V.
2. For best noise immunity, use a twisted-pair shielded cable for connection to the servo driver.
3. To prevent undesirable signal reflection, terminate with 120Ω resistors.
4. Terminate the shield-wire to frame ground (FG) at both ends of the communication line.

Figure 11: BiSS-C Full-Duplex I/O Connection

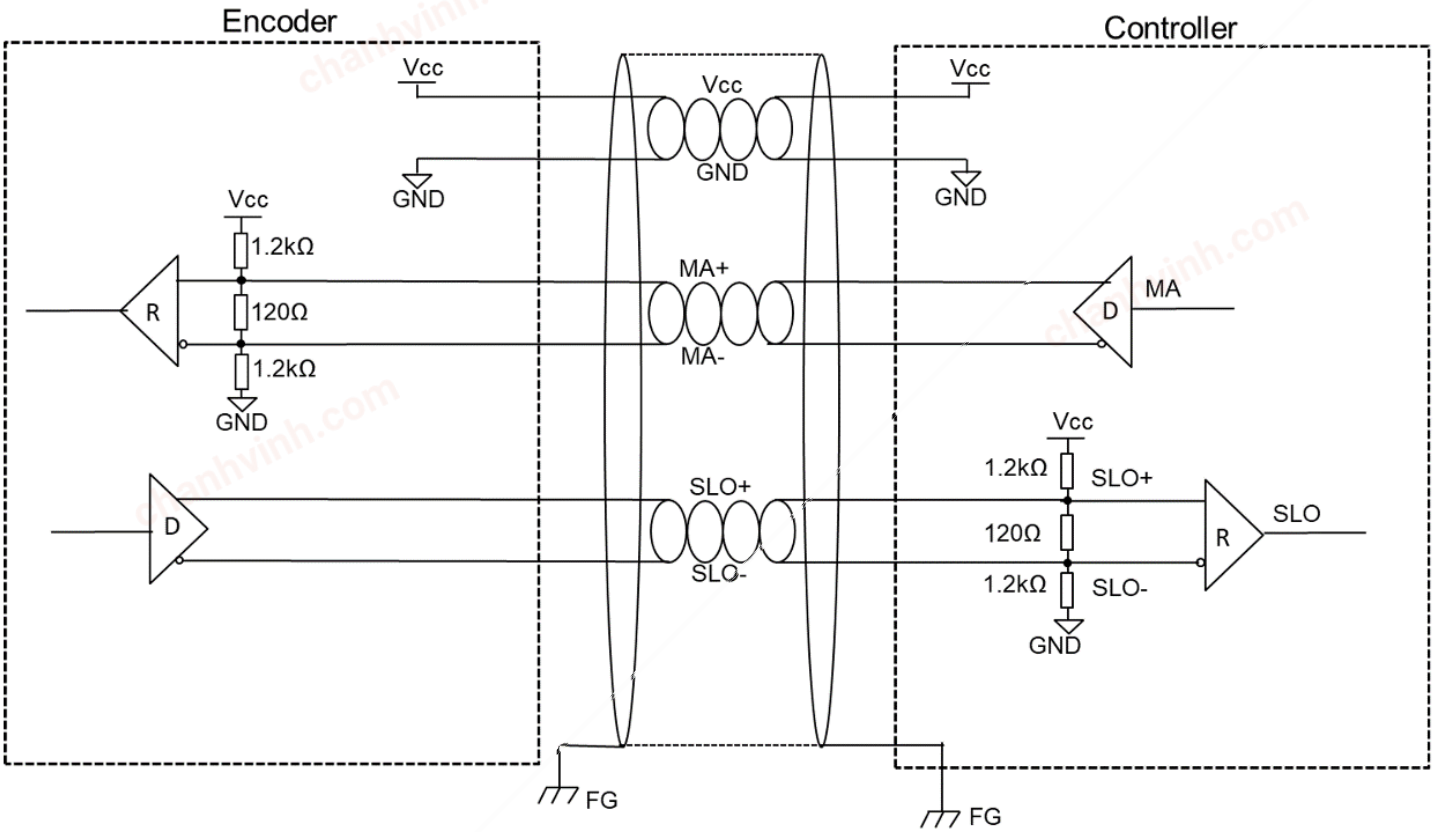

chanhvinh.com

AR49-M49M/M25S-Sxx with SSI 2-Wire Serial Interface

Table 7: SSI Protocol Specifications

Over the recommended operating conditions of V_{DD} 4.5V to 5.5V, T_a = –40°C to 115°C.

SSI Communication Parameters	Symbol	Conditions	Min.	Typ.	Max.	Unit
Clock Frequency	f_{CLK}	—	100	—	10,000	kHz
Clock Duty	DUT_{CLK}	—	—	50	—	%
Monoflop Time	t_m	—	—	—	20	µs
Pause Time	t_p	—	21	—	—	µs

Figure 12: SSI Data Field and Timing Diagram

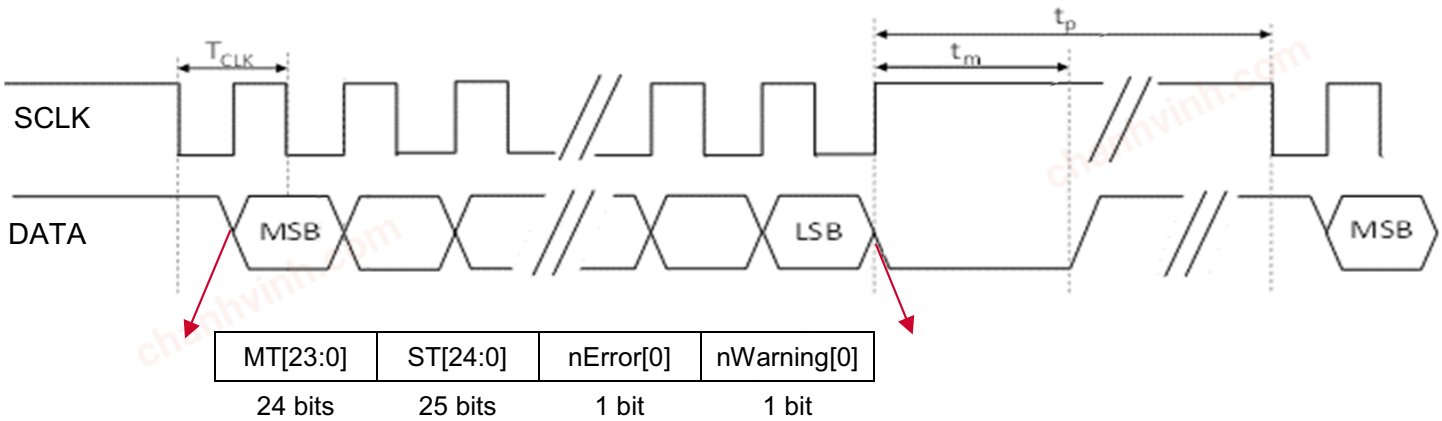

For the SSI option, the encoder calibration and device configuration are achieved by switching to the SPI mode during calibration. By toggling the logic levels of the SEL0 and SEL1 pins, the SPI calibration mode can be enabled.

chanhvinh.com

SSI 2-Wire Full-Duplex Connection

1. Provide the following encoder power supply:
   – For the 5.0V supply, V_{CC} should be within the range of 4.5V to 5.5V.
2. For best noise immunity, use a twisted-pair shielded cable for connection to the servo driver.
3. To prevent undesirable signal reflection, terminate with 120Ω resistor.
4. Terminate the shield-wire to frame ground (FG) at both ends of the communication line.

Figure 13: SSI Full-Duplex Connection

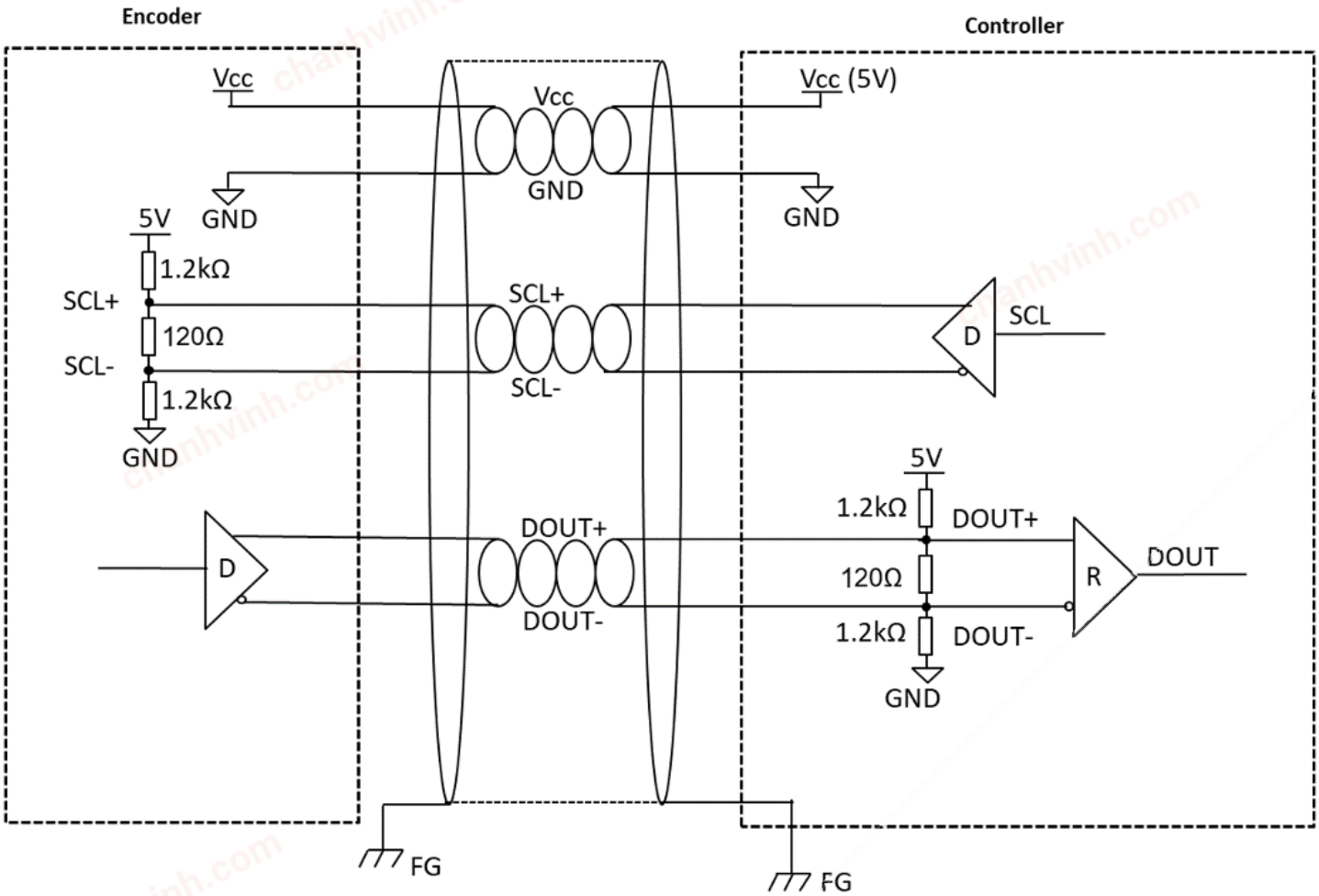

chanhvinh.com

AR49-M49M/M25S-Pxx with SPI 4-Wire Protocol

Figure 14: SPI Timing Diagram

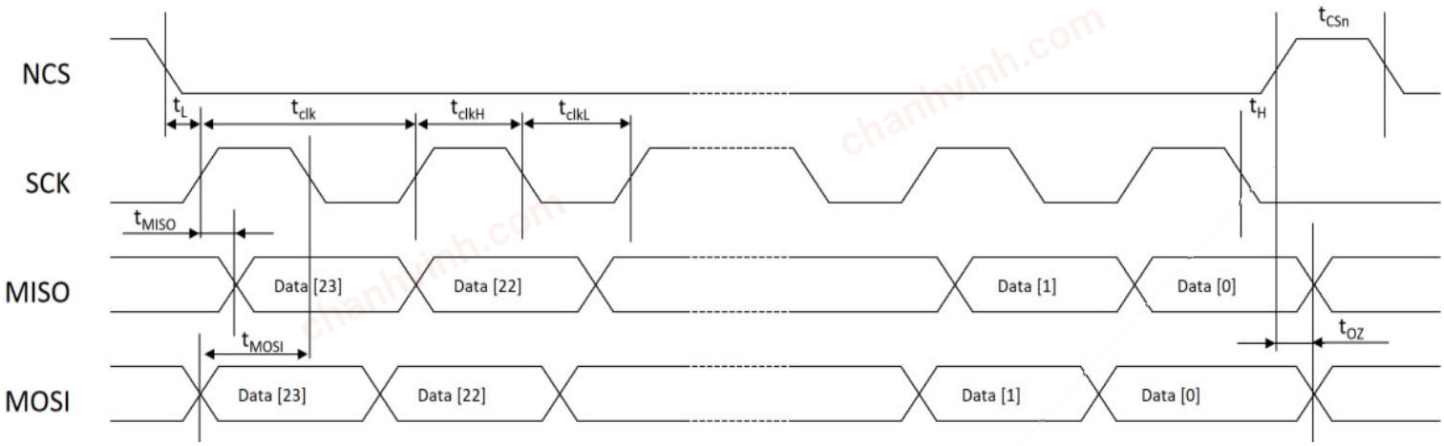

Table 8: SPI Protocol Specifications

Over the recommended operating conditions of V_{DD} 4.5V to 5.5V, T_a = –40°C to 115°C.

Symbol	Description	Min.	Typ.	Max.	Units
t_L	Time between the NCS falling edge and the CLK rising edge	350	—	—	ns
t_{clk}	Serial clock period	100	—	—	ns
t_{clkL}	Low period of the serial clock	50	—	—	ns
t_{clkH}	High period of the serial clock	50	—	—	ns
t_H	Time between the last falling edge of SCK and the rising edge of NCS	t_{clk}/2	—	—	ns
t_{NCS}	High time of NCS between two transmissions	350	—	—	ns
t_{MOSI}	Data input valid to the clock edge	20	—	—	ns
t_{MISO}	SCK edge to the data output valid	—	51	—	ns
t_{OZ}	Time between the NCS rising edge and the MISO Hi-Z	—	10	—	ns

NOTE: The user should read back data to confirm that data has been written successfully.

chanhvinh.com

Connector Information

Figure 15: Horizontal and Vertical Connector Information

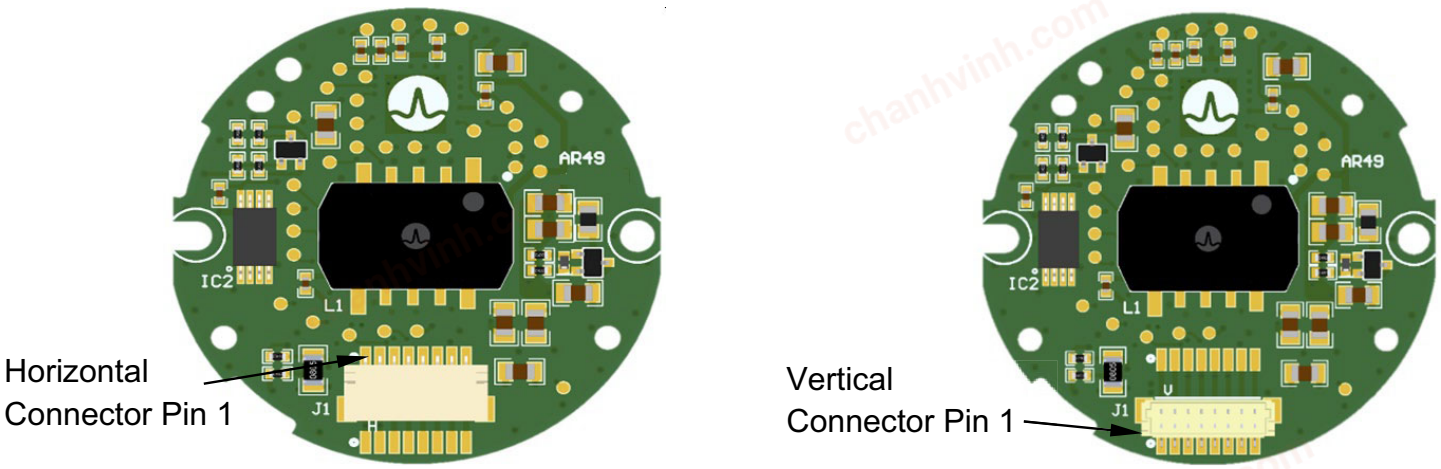

Table 9: Recommended Connector Information

Part	Location	Manufacturer	Part Number	Description
Header	On PCB	JST	SM08B-SRSS-TB	Horizontal/radial connector
		JST	BM08B-SRSS-TB	Vertical/axial connector
Wire Plug	Mating plug for wires	JST	SHR-08V-S	—
Crimp Pins	Crimp pins for wires	JST	SSH-003T-P0.2-H	Terminal pin for wire 32~28 AWG

Table 10: Encoder Pinout Description

Pin #	BiSS-C	SPI	SSI [a, b]	RS485
1	+5V	+5V	+5V	+5V
2	0V	0V	0V	0V
3	MA+	SPI-NCS	SCLK+/SPI-NCS	NC
4	MA-	SPI-CLK	SCLK-/SPI-CLK	NC
5	SLO+	SPI-DO/MISO	DATA+/SPI-DO/MISO	DATA+
6	SLO-	SPI-DIN/MOSI	DATA-/SPI-DIN/MOSI	DATA-
7	NC	NC	SEL0	NC
8	NC	NC	SEL1	NC

a. The SSI option is configured via the shared SPI pins and setting the correct logic level for the SEL0 and SEL1 pins.

b. For the SSI option, when switching to communicate with the SPI protocol, Pin 3 and Pin 4 of the SPI-NCS and SPI-CLK lines require a strong driver current due to the SSI SCLK+/SCLK- terminating resistor. It is recommended to be achieved with a level shifter or a line driver circuit.

chanhvinh.com

Part Numbering

Figure 16: AR49 Module Encoder Part Number Definition

A R 4 9 – M **4 9** **M** – **X** **1 2** **H**

Resolution	
49	49 Bits (ST+MT)
25	25 Bits (ST)

Output Type	
M	Multi-Turn
S	Single-Turn

Protocol	
B	BiSS-C
S	SSI
P	SPI
K	RS485

Hub ID	
12	6 mm

Connector	
H	Horizontal
V	Vertical

Table 11: Encoder Ordering Information

No.	Multi-Turn Part Number	Description
1	AR49-M49M-S12V	49-Bit MT, Differential SSI, 6-mm Shaft, M3 Mounting Screw, Vertical Connector.
2	AR49-M49M-P12V	49-Bit MT, Single-Ended SPI 4-Wire, 6-mm Shaft, M3 Mounting Screw, Vertical Connector.
3	AR49-M49M-K12V	49-Bit MT, Differential RS485, 6-mm Shaft, M3 Mounting Screw, Vertical Connector.
4	AR49-M49M-B12V	49-Bit MT, Differential BiSS-C, 6-mm Shaft, M3 Mounting Screw, Vertical Connector.
5	AR49-M49M-S12H	49-Bit MT, Differential SSI, 6-mm Shaft, M3 Mounting Screw, Horizontal Connector.
6	AR49-M49M-P12H	49-Bit MT, Single-Ended SPI 4-Wire, 6-mm Shaft, M3 Mounting Screw, Horizontal Connector.
7	AR49-M49M-K12H	49-Bit MT, Differential RS485, 6-mm Shaft, M3 Mounting Screw, Horizontal Connector.
8	AR49-M49M-B12H	49-Bit MT, Differential BiSS-C, 6-mm Shaft, M3 Mounting Screw, Horizontal Connector.
No.	**Single-Turn Part Number**	**Description**
9	AR49-M25S-S12V	25-Bit ST, Differential SSI, 6-mm Shaft, M3 Mounting Screw, Vertical Connector.
10	AR49-M25S-P12V	25-Bit ST, Single-Ended SPI 4-Wire, 6-mm Shaft, M3 Mounting Screw, Vertical Connector.
11	AR49-M25S-K12V	25-Bit ST, Differential RS485, 6-mm Shaft, M3 Mounting Screw, Vertical Connector.
12	AR49-M25S-B12V	25-Bit ST, Differential BiSS-C, 6-mm Shaft, M3 Mounting Screw, Vertical Connector.
13	AR49-M25S-S12H	25-Bit ST, Differential SSI, 6-mm Shaft, M3 Mounting Screw, Horizontal Connector.
14	AR49-M25S-P12H	25-Bit ST, Single-Ended SPI 4-Wire, 6-mm Shaft, M3 Mounting Screw, Horizontal Connector.
15	AR49-M25S-K12H	25-Bit ST, Differential RS485, 6-mm Shaft, M3 Mounting Screw, Horizontal Connector.
16	AR49-M25S-B12H	25-Bit ST, Differential BiSS-C, 6-mm Shaft, M3 Mounting Screw, Horizontal Connector.

Table 12: Accessories Ordering Information

No.	Part Number	Description
1	AS20-C300	8-pin mating connector with 300-mm cable length.
2	AR49-M49-E01	Programming Kit (applicable for all protocol options). Contents: 1 unit of MCU-based programming kit, 1 unit of USB cable for the PC interface, the DUT cable, and the associated programming software.
3	AR25-AC25	Accuracy Calibration Station for the AR25/AR49 Series Rotary Reflective Encoder. Contents: Mechanical setup including the servo motor control, high-accuracy reference encoder, programming kits, associated cable assemblies (for the PC interface, motor handler communication, DUT encoder connection), and the associated GUI programming software.

Copyright © 2024 Broadcom. All Rights Reserved. The term “Broadcom” refers to Broadcom Inc. and/or its subsidiaries. For more information, go to www.broadcom.com. All trademarks, trade names, service marks, and logos referenced herein belong to their respective companies.

Broadcom reserves the right to make changes without further notice to any products or data herein to improve reliability, function, or design. Information furnished by Broadcom is believed to be accurate and reliable. However, Broadcom does not assume any liability arising out of the application or use of this information, nor the application or use of any product or circuit described herein, neither does it convey any license under its patent rights nor the rights of others.