chanhvinh.com

APDS-9702

Signal Conditioning IC for Optical Proximity Sensors with Digital I²C Interface

Data Sheet

Description

APDS-9702 is a signal conditioning IC that enhances the performance and robustness of the optical sensors used for proximity or object detection.

APDS-9702 is a single chip solution that consists of an I²C Write function, oscillation circuit, LED driver circuit and sunlight cancellation circuit integrated into a single chip. APDS-9702 has artificial light immunity and is also operational under the sun. Design flexibility is optimized as APDS-9702 can be paired up with an integrated proximity sensor or discrete pair solution.

APDS-9702 can be disabled to maximize power savings and battery life in applications such as portable or battery-operated devices. The LED current of the optical proximity sensors can be configured to different levels using a limiting resistor at the LEDA pin. APDS-9702 also provides user options in frequency, suitable burst rate, comparator threshold setting and burst off period that can reduce power consumption. These low power consumption features makes it also ideal for low power mobile and handheld devices.

APDS-9702 is capable of operating at voltage supply ranging from 2.4 V to 3.6 V. APDS-9702 has two separate output pins for analog and digital outputs. This provides flexibility to use either the analog or digital output (or both) depending on the requirements of the application.

The device is packaged in 8-pin QFN package measuring 0.55mm(H) x 2mm(W) x 2mm(L).

Ordering Information

Part Number	Packaging	Quantity
APDS-9702-020	Tape & Reel	2500 per reel

Application Support Information

The Application Engineering Group is available to assist you with the application design associated with APDS-9702 module. You can contact them through your local sales representatives for additional details.

Features

- Low power consumption
  - Internal oscillation circuit to drive LED in pulse mode
  - Low shut down current
  - External LED drive-current control
- Complete shutdown mode
  - Low shutdown current
- Supply voltage : 2.4 V to 3.6 V
- Operational in sunlight conditions up to 100klux(with HSDL-9100)
- Artificial light immunity
- Analog & Digital output available
  - Built in comparator for digital output
  - Digital output remains Low during object detected.
- Wide bandwidth Trans-impedance amplifier
- External capacitor and resistor for integration and gain controls
- Flexibility to enhance detection distance up to 200mm with HSDL-9100 or further with external discrete pair
- Small 2mm x 2mm QFN 8-pin package
- Design flexibility to pair with Avago Proximity Sensors or discrete pair solution
- Lead-free & RoHS Compliant

Applications

- PDA and mobile phones
- Digital Camera
- Portable and Handheld devices
- Personal Computers/Notebooks
- Amusement/Games/Vending Machines
- Industrial Automation
- Contactless Switches
- Sanitary Automation

chanhvinh.com

APDS-9702 Block Diagram

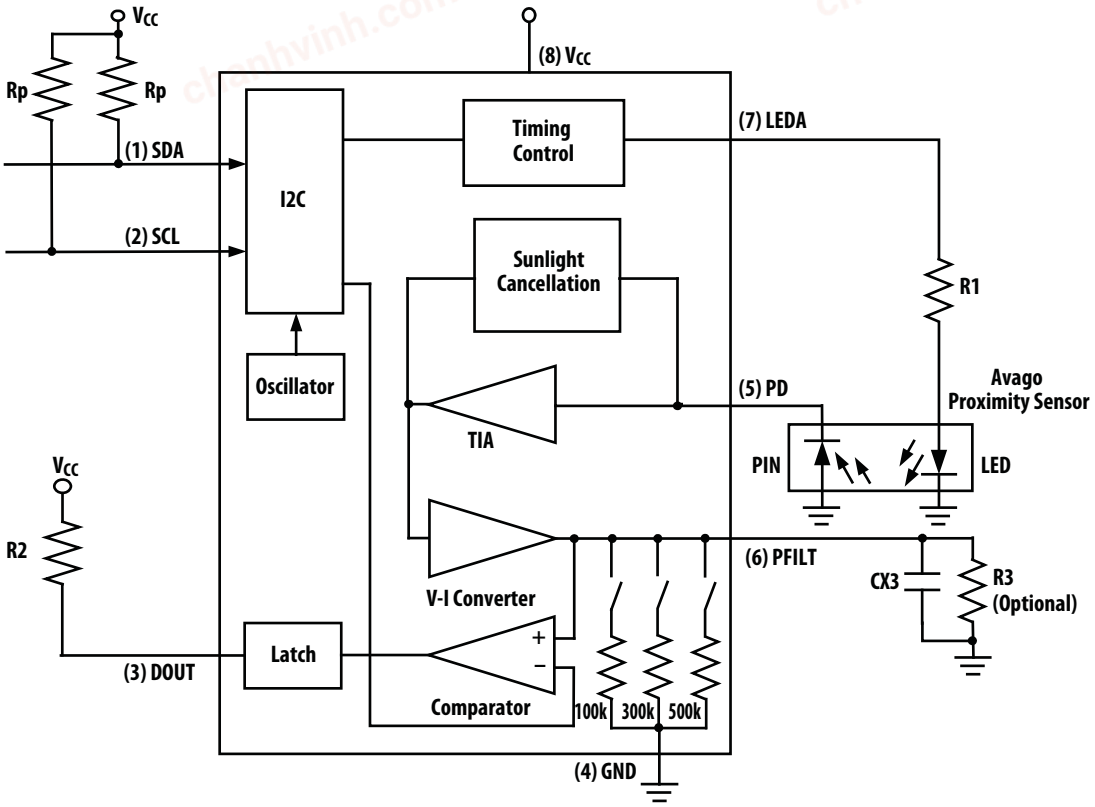

Figure 1. APDS-9702 Block Diagram

chanhvinh.com

APDS-9702 pin-out and I/O Configurations

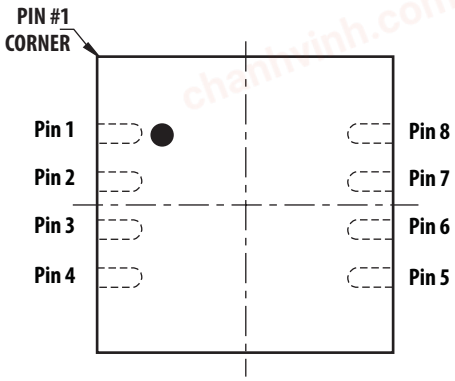

I/O Pins Configuration Table

Pin	Symbol	Type	Description
1	SDA	Digital I/O	**I2C Serial Data I/O terminal** I2C input / output signal
2	SCL	Digital I/P	**I2C Serial Clock Input terminal** I2C clock input signal
3	DOUT	Digital O/P	**Digital Output** An open drain output that requires a pull-up resistor of recommended value 10k Ω DOUT = Low at last LED pulse of burst when $V_{PFILT} > V_{TH}$, DOUT remains Low during object detected. DOUT = High at last LED pulse of burst when $V_{PFILT} < V_{TH}$, DOUT remains High during object not detected. Please refer to Output Waveforms Definition.
4	GND	Ground	**Ground**
5	PD	Analog I/P	**Photo-Detector Input** Connect to Cathode of photo-detector (proximity sensor)
6	PFILT	Analog O/P	**Analog Output** Connect to integration circuit (R3 & CX3)
7	LEDA	Analog O/P	**LED Driver Output** Connect to Anode of LED (proximity sensor)
8	VCC	Supply	**Voltage Supply**

Absolute Maximum Ratings

Parameter	Symbol	Min.	Max.	Units	Conditions
Supply Voltage	V_{CC}	0	3.6	V	Ta=25°C
Input Logic Voltage	V_I	0	3.6	V	Ta=25°C
Reflow Soldering Temperature			260	°C	

Recommended Operating Conditions

Parameter	Symbol	Min.	Max.	Units	Conditions
Operating Temperature	T_A	-40	85	°C	
Storage Temperature	T_S	-40	125	°C	
Supply Voltage	V_{CC}	2.4	3.6	V	

chanhvinh.com

Electrical & Optical Specifications (Ta=25°C)

Parameters	Symbol	Minimum	Typical	Maximum	Units	Conditions
Input						
Logic High Input Voltage	V_{IH}	0.7*V_{CC}			V	
Logic Low Input Voltage	V_{IL}			0.3* V_{CC}	V	
Logic High Input Current	I_{IH}		0.1		µA	$V_I \geq V_{IH}$
Logic Low Input Current	I_{IL}		0.1		µA	$V_I \leq V_{IL}$
Shutdown Current	I_{SD}			1	µA	Vcc = 3.0 V, TRG = X, PWR = 0
Standby Current	I_{SB}		70	100	µA	Vcc = 3.0 V, TRG = 0, PWR = 1
Output						
Digital Output Low Level	V_{OL}	0		0.3	V	$I_{DOUT(Low)}$ = 2 mA, Vcc = 3.0 V
Digital Output High Level	V_{OH}	Vcc – 0.3			V	Vcc = 3.0 V, R2 = 10kΩ
Built-in Resistor at PFILT	R_{FILT}		100k, 300k, 500k		Ω	Through I^2C set.
Transmitter						
I_{LED} Pulse Current	I_{LED}		125	235	mA	Vcc = 3.0 V, R1 = 10Ω
Number of LED Pulse			16 x (1, 2, …, 16 times)			Through I^2C set.
LED Pulse Frequency			12.5, 25, 50, 100		kHz	Through I^2C set. Pulse Duty Cycle = 50%.
LED Burst Duration vs. OFF Period			1/16, 1/64, 1/128, 1/256			Through I^2C set.
Receiver						
Photodiode Input Current (PD)	I_{PD}	0		3	µA	
Current Gain	I_{PFILT}/I_{PD}		20		times	Vcc = 3.0 V [1]
Comparator Threshold						
Threshold voltage	V_{TH}		0.12 0.17 0.22 0.27 0.32 0.37 0.42 0.47 0.52 0.57 0.62 0.67 0.72 0.77 0.82 0.87		V	TH = 0000, TH = 0001, TH = 0010, TH = 0011, TH = 0100, TH = 0101, TH = 0110, TH = 0111, TH = 1000, TH = 1001, TH = 1010, TH = 1011, TH = 1100, TH = 1101, TH = 1110, TH = 1111
Sunlight Cancellation						
DC Current, PD	I_{DC}		100		µA	Vcc = 3.0 V[1]

Note:
1. Specified by design, not production tested.

chanhvinh.com

Typical Application Circuit

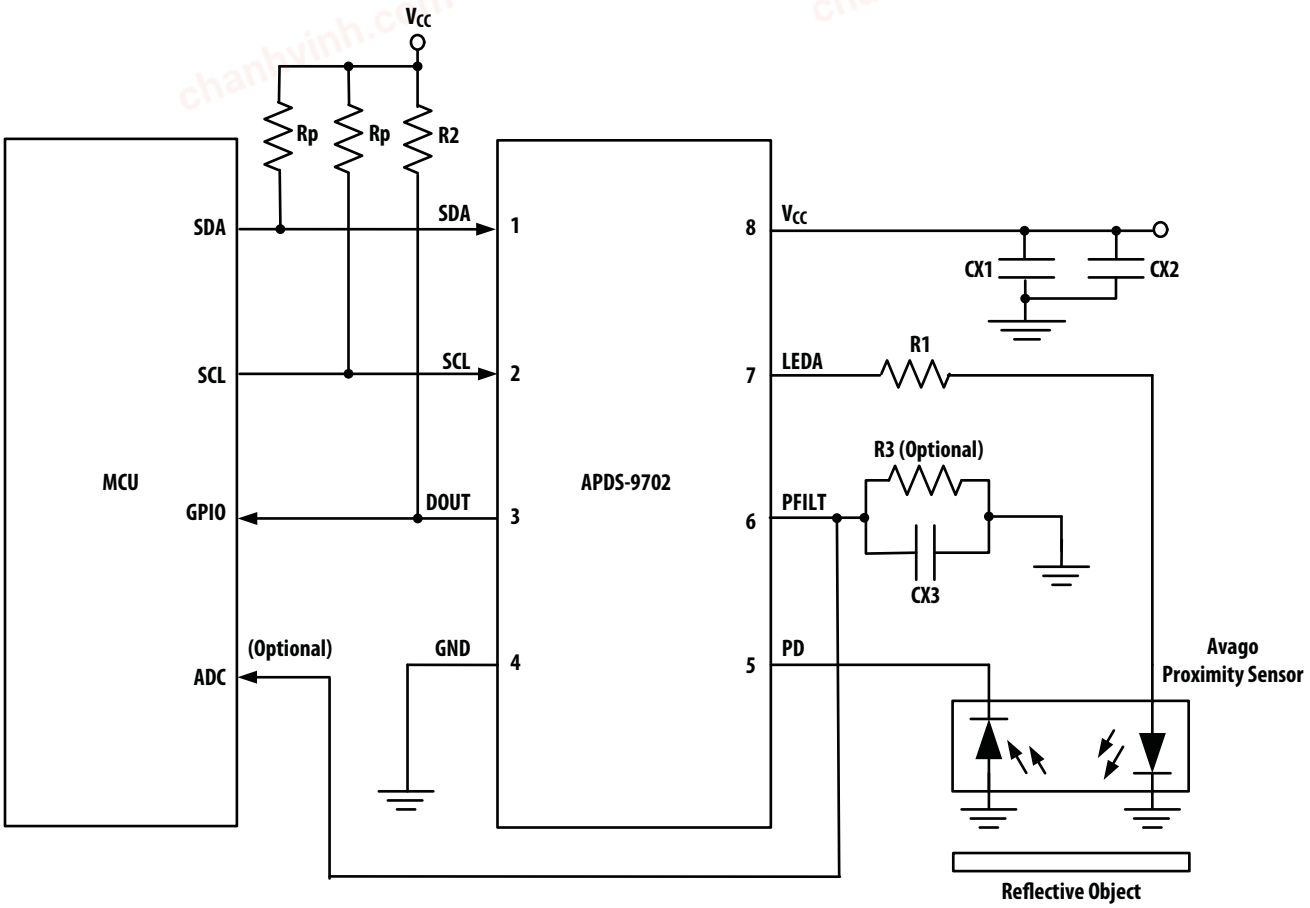

Figure 2. Typical Application Circuit for APDS-9702

Recommended Avago Proximity Sensor	Description
HSDL-9100	Integrated Reflective Proximity Sensor

Component	Recommended Values (with HSDL-9100)
R1	10 Ω ± 5%, 0.25W
R2	10kΩ ± 5%
R3	1MΩ ± 5%
Rp	10kΩ ± 5%
CX1	100 nF ± 20% X 7R, Ceramic,
CX2	6.8 µF ± 20%, Tantalum
CX3	3.3 nF ± 20% X 7R, Ceramic

chanhvinh.com

I²C Definition

APDS-9702 operates as slave device on I²C bus for clock frequency (SCL) up to 400 kHz. The basic protocol of I²C bus is described below, for more details and specifications, please refer to *I²C-bus specification and user manual*.

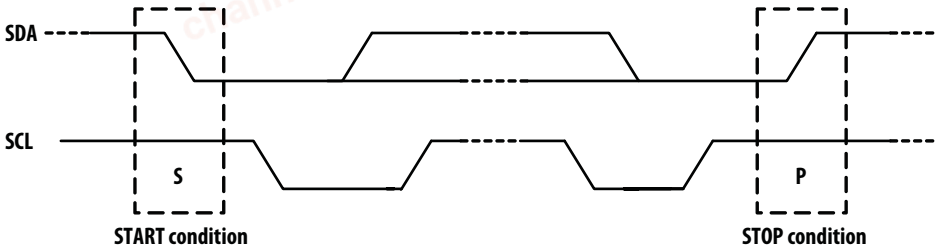

START and STOP conditions

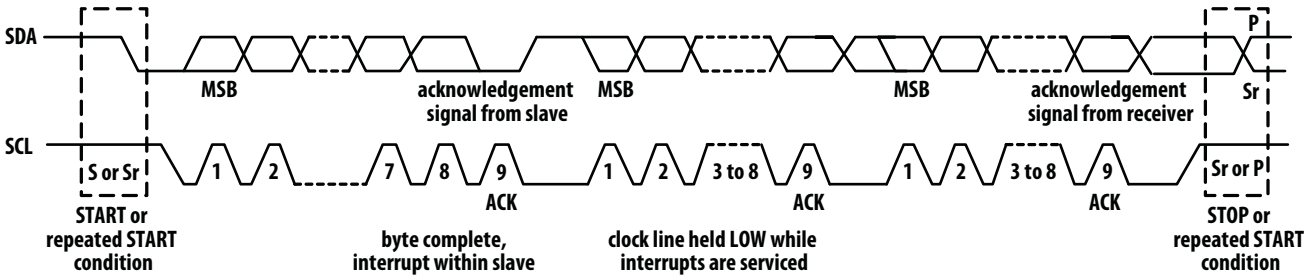

Data transfer on I²C bus

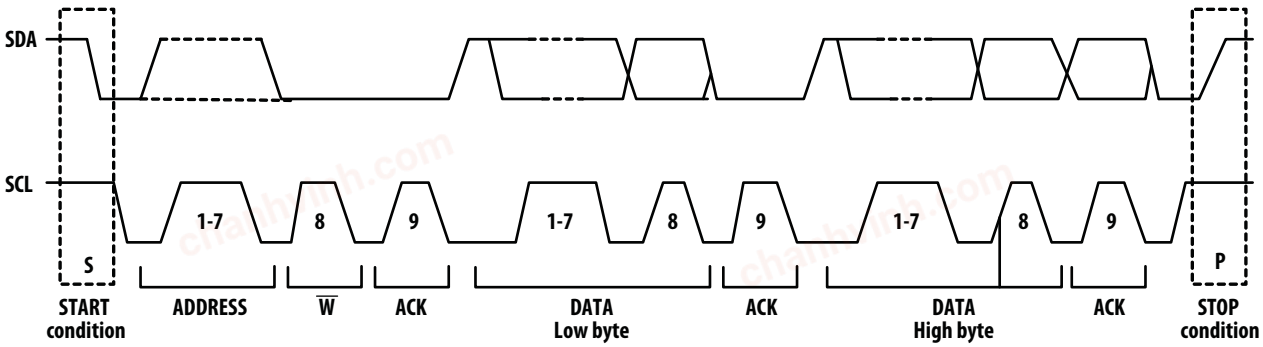

A complete data transfer

1	7	1	1	8	1	8	1	1
S	Slave Address	Wr	A	Data Byte	A	Data Byte	A	P

S Start Condition

Wr Write"0"

A Acknowledge (0 for ACK)

P Stop Condition

Master-to-Slave

Slave-to-Master

Slave Address: 1010100 (Default)

chanhvinh.com

Register Definition

Bit	15	14	13	12	11	10	9	8	7	6	5	4	3	2	1	0
	TRG	PWR	NB3	NB2	NB1	NB0	F1	F0	DC1	DC0	TH3	TH2	TH1	TH0	R1	R0
Default	0	0	0	0	0	1	0	0	1	0	0	1	0	0	0	0

Register	Type	Description	Remark
TRG	Trigger	This pin is active high. TRG = 1 → Normal proximity sensing operations TRG = 0 → No operation (Default)	
PWR	Power	PWR = 0 → Power Shut Down (Default) PWR = 1 and TRG = 0 → Standby PWR = 1 and TRG = 1 → Active Operations	
NB<3:0>	NBurst	Number of LED Pulse per Burst = 16 x (1, 2, …, 16 times); 0x0 = 16-pulse, 0x1 = 32-pulse (Default), …, 0xE = 240-pulse, 0xF = 256-pulse	Figure 3
F<1:0>	Frequency	00 = 12.5kHz (Default), 01 = 25kHz, 10 = 50kHz, 11 = 100kHz; Wave is fixed at 50% Duty Cycle	Figure 3
DC<1:0>	Duration Cycle	LED Burst Duration versus OFF period; 00 = 1:16, 01 = 1:64, 10 = 1:128 (Default) and 11 = 1:256	Figure 3
TH<3:0>	Threshold, VTH	16 options of Comparator Threshold Setting; 0000 = 0.12V, 0001 = 0.17V, 0010 = 0.22V, 0011 = 0.27V, 0100 = 0.32V (Default), 0101 = 0.37V, 0110 = 0.42V, 0111 = 0.47V, 1000 = 0.52V, 1001 = 0.57V, 1010 = 0.62V, 1011 = 0.67V, 1100 = 0.72V, 1101 = 0.77V, 1110 = 0.82V, 1111 = 0.87V	Figure 4
R<1:0>	RFLIT	Programmable Filter Register; 00 = No resistor (Default), 01 = 100k, 10 = 300k, 11 = 500k	Figure 5

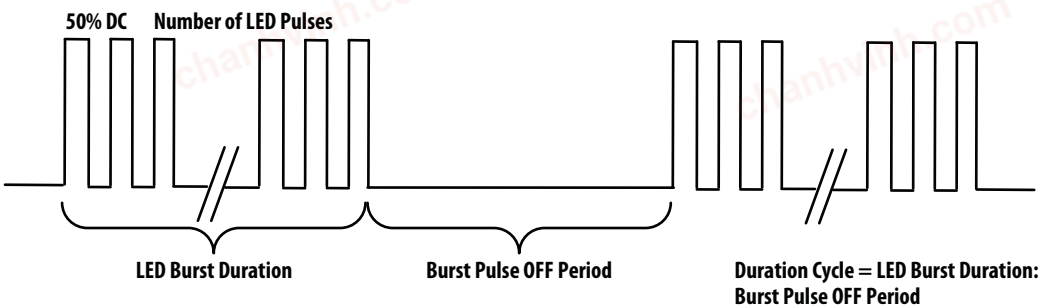

Figure 3. LEDA Burst Pulses Definition

Transmit Burst Pulses Definition

Operation ON/OFF condition is shown in the following table:

TRG	PWR	Condition
X	0	Shut down
0	1	Standby Mode
1	1	Active Mode, pulses sent

The burst pulses at LEDA pin will be activated under 2 state conditions with 2 different start-up timing. The following diagrams explained these 2 scenarios.

(a) State condition 1:

From Shut down -> Standby Mode -> Active Mode: Burst pulses at LEDA pin are activated after 1.3 ms

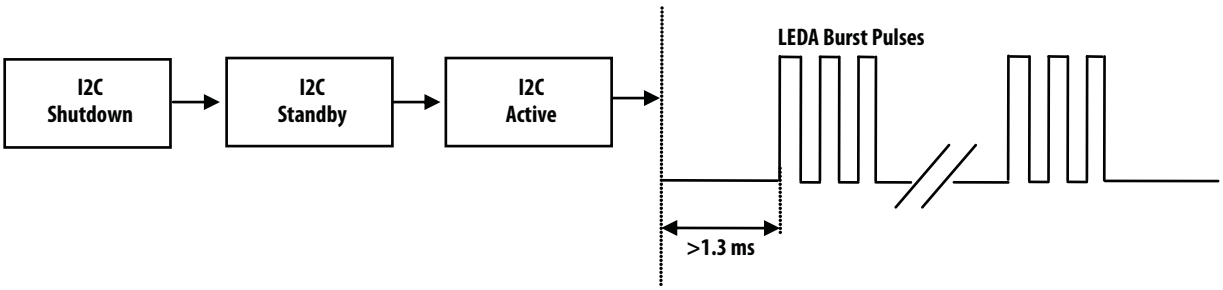

(b) State condition 2:

From Shut down -> Active Mode: Burst pulses at LEDA pin are activated after 1.3 ms

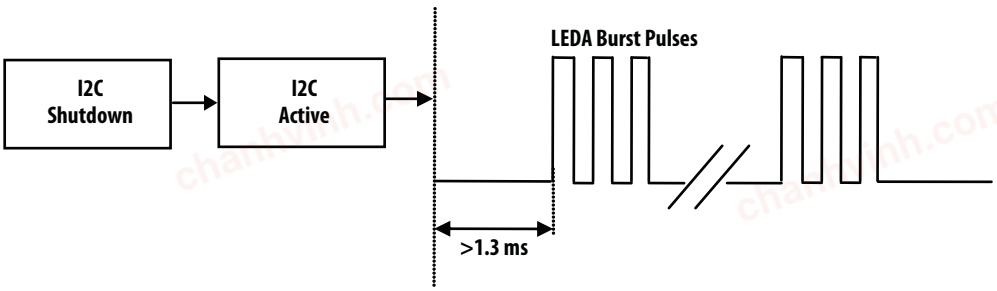

chanhvinh.com

Output Waveforms Definition

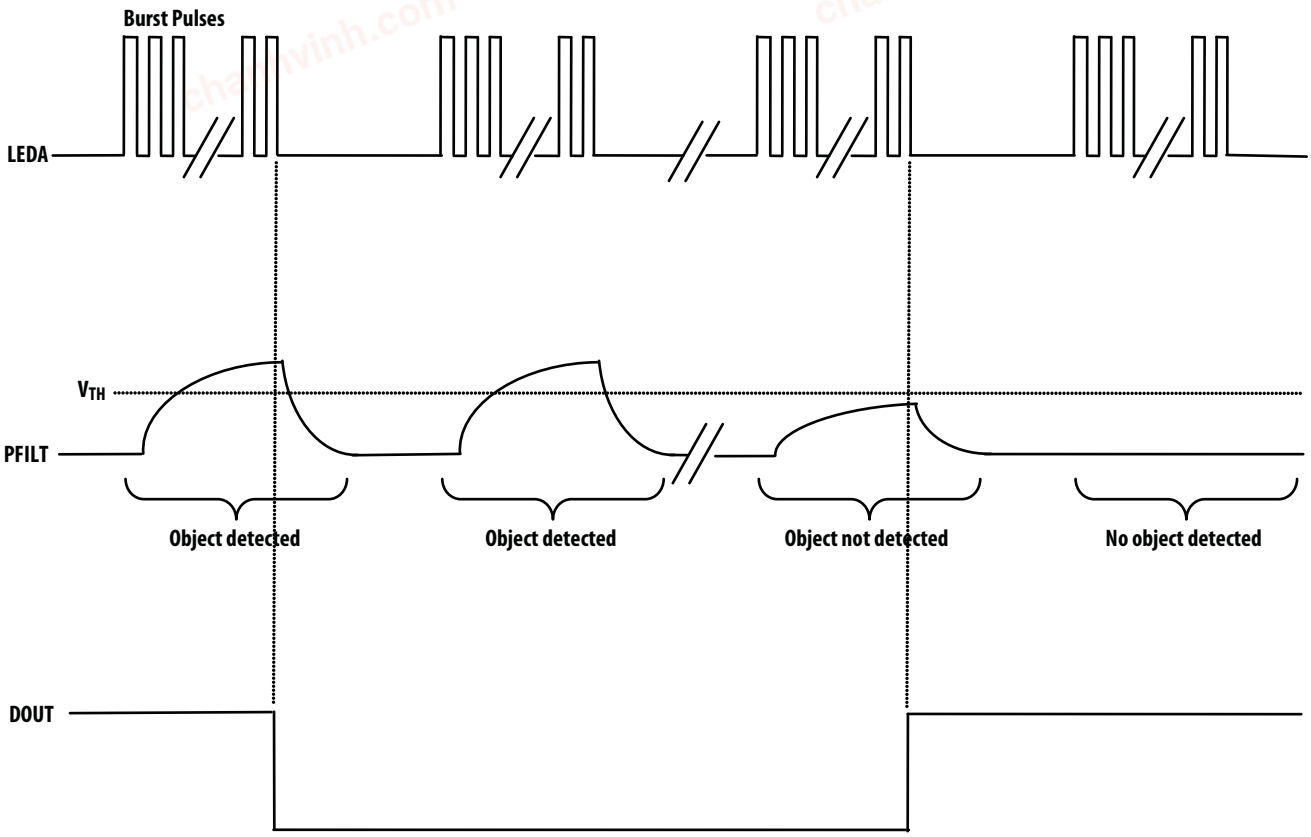

Figure 4. Output Waveforms Definition

chanhvinh.com

R_{FILT} Definition

There are built-in resistors at PFILT (pin 6) to provide 4 options to set the desired resistor for integrated RC circuit.

R0	R1	Resistor Value
0	0	Open. External resistor R3 is required to be in parallel with CX3
0	1	100k ohm. R3 become optional.
1	0	300k ohm. R3 become optional.
1	1	500k ohm. R3 become optional.

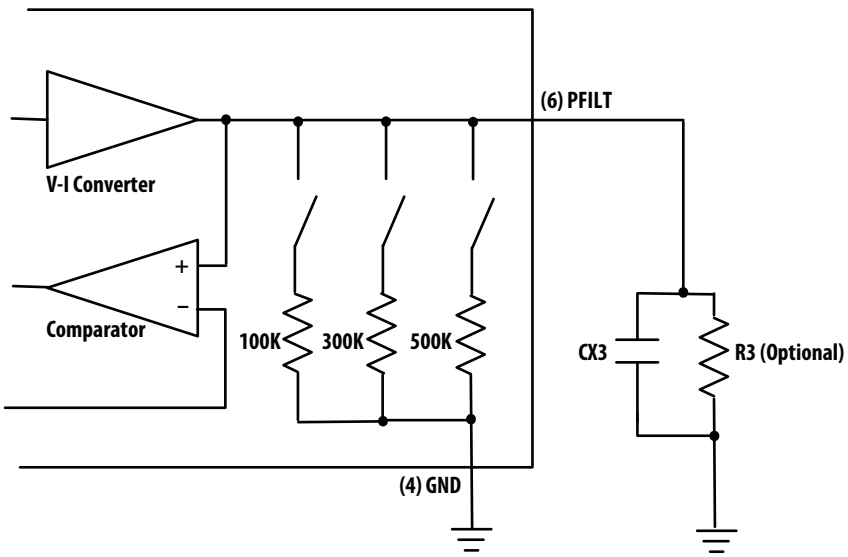

Figure 5. R_{FILT} definition

chanhvinh.com

APDS 9702 Performance Charts

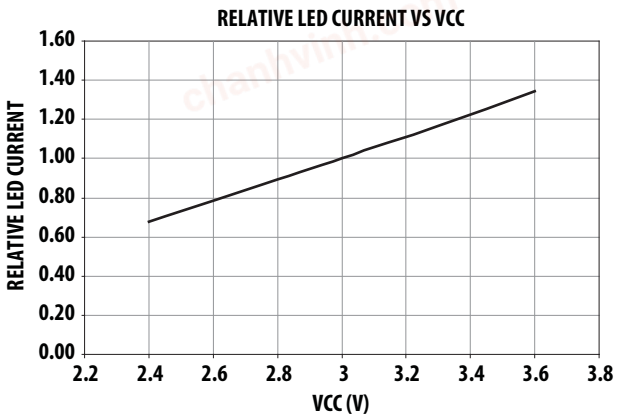

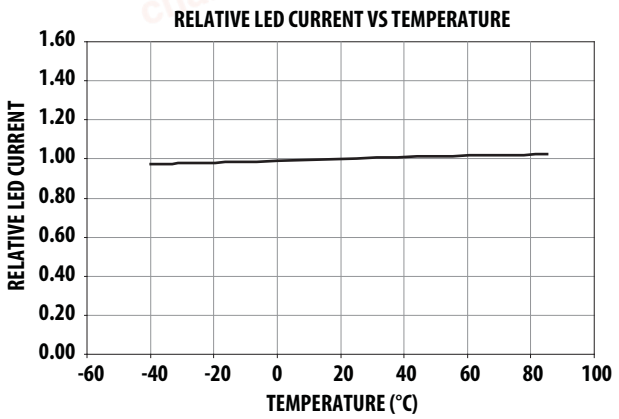

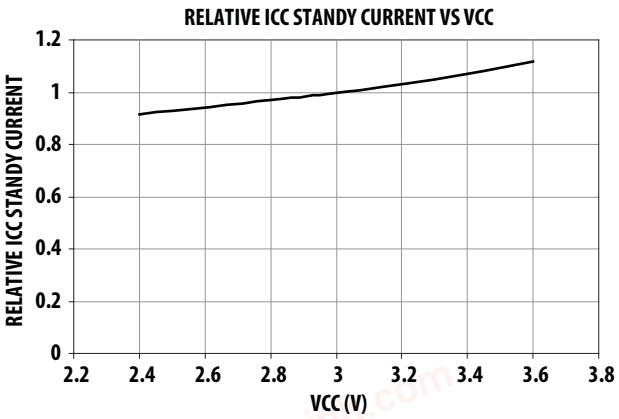

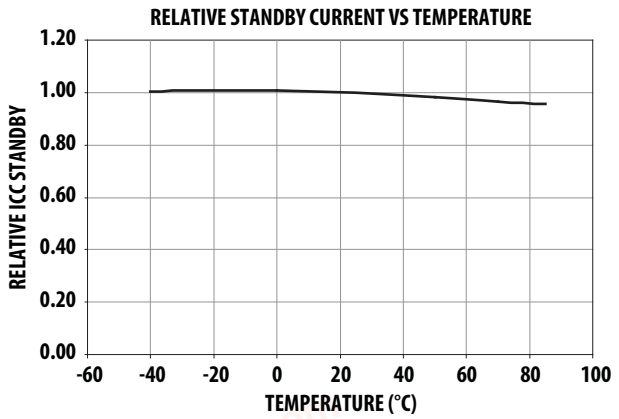

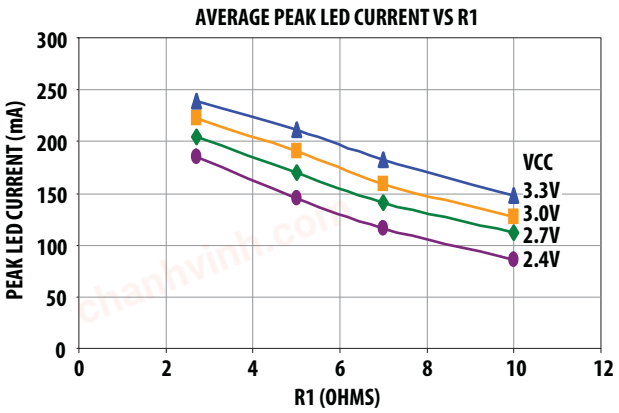

chanhvinh.com

APDS-9702 Package Dimensions

QFN 8-Pin Package

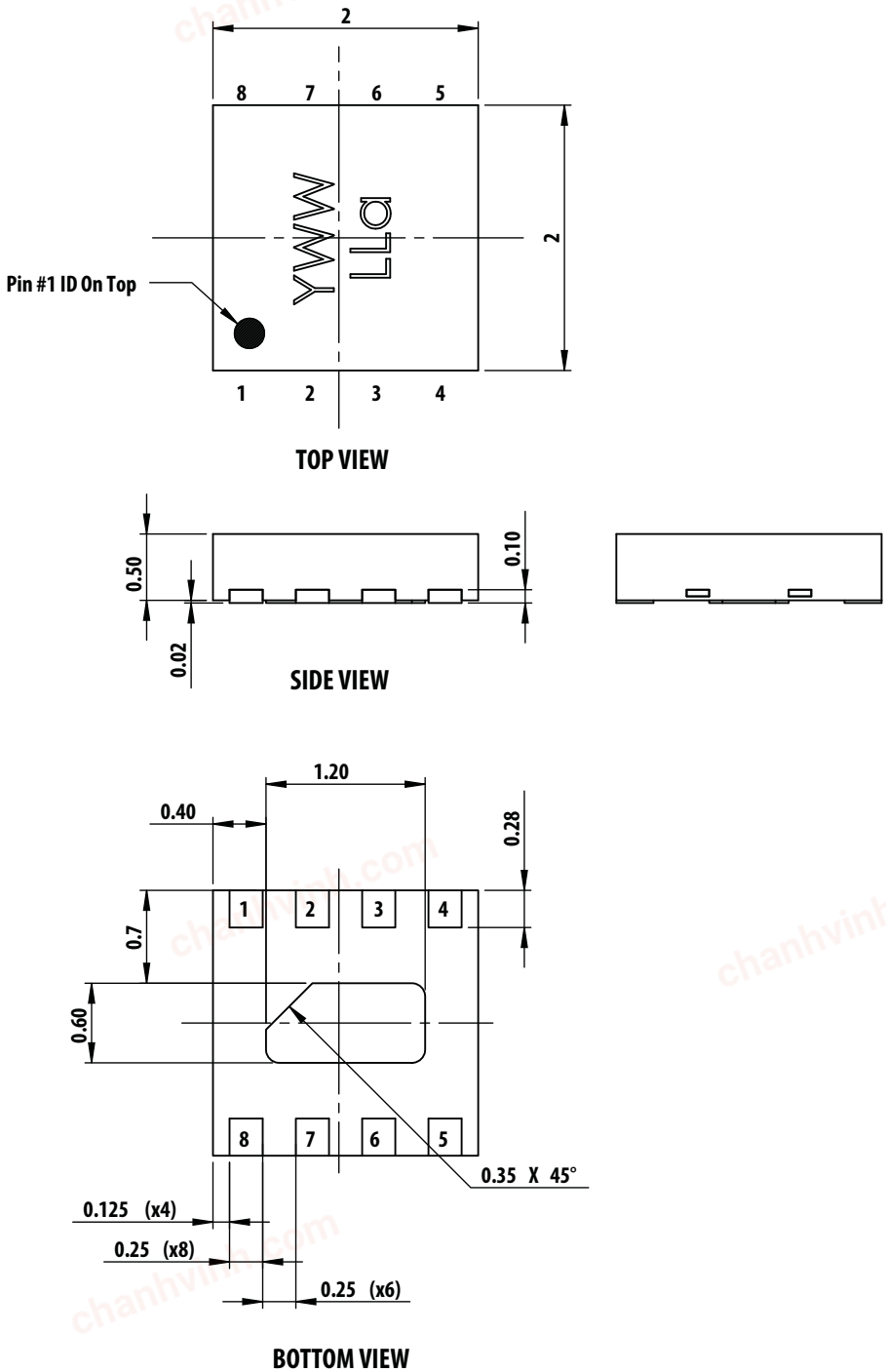

Note:
1. All Dimensions in mm. Tolerance ±0.1mm unless specified.
2. Marking Information:
   The unit is marked 'YWW LLa' on the chip.
   Y = Year (Last digit of the year)
   WW = work week (1-54)
   LL = Lot number (01-99)
   a = Denote this is an I^2C part.

chanhvinh.com

Recommended Minimum Land pattern and Keep-out Area

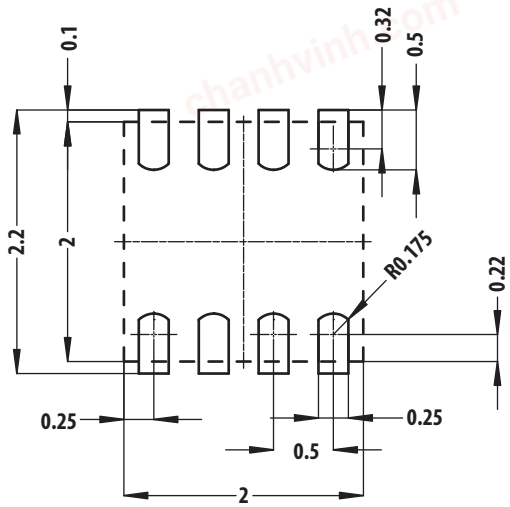

SOLDER LAND PATTERN

Dimension in mm.
Recommended tolerances +/-0.1mm

Keep-out Area Recommendations:

Area of Solder Land pattern = 2.3mm x 2.1mm

Module placement tolerance & keep out on each side with no lead = 0.55mm & keep out on each side solder lead = 0.8mm

Keep-out area = 3.9mm x 3.2mm

chanhvinh.com

APDS-9702 Tape and Reel Dimensions

Tape Dimensions

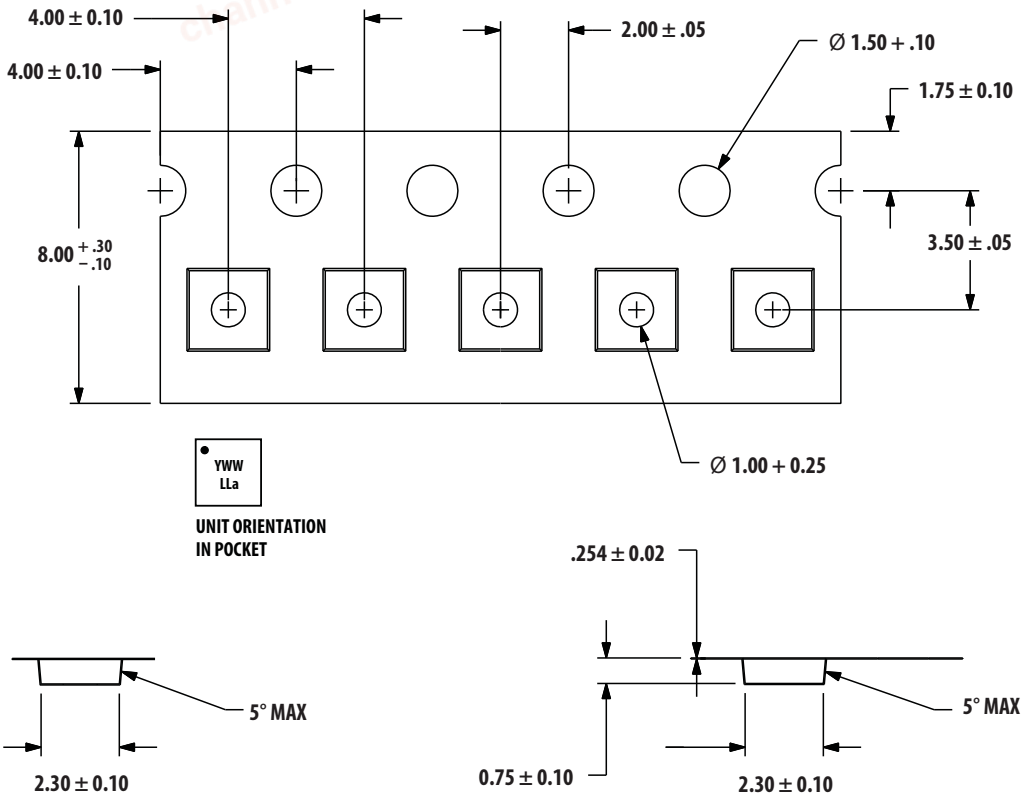

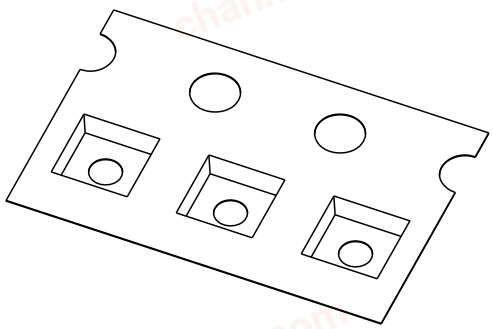

ALL DIMENSIONS IN mm.

chanhvinh.com

Reel Dimensions

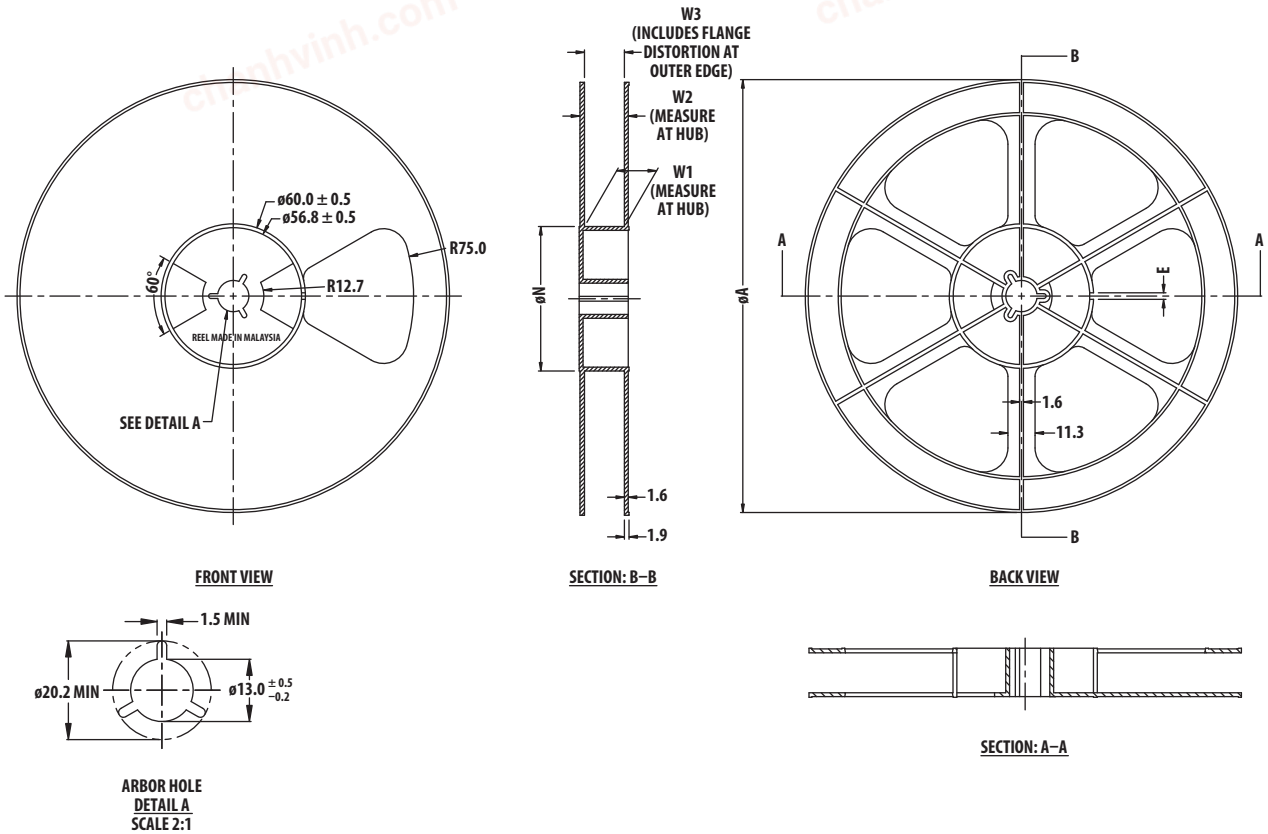

Product SPecifications						
TAPE WIDTH	ØA	ØN	WT	W2 (MAX)	W3	E
08MM	180 $^{+0.0}_{-2.0}$	60 ±2.0	8.4 $^{+1.5}_{-0.0}$	14.4	8.4 $^{+2.5}_{-0.5}$	4.0 ± 0.1

All Dimensions in mm.

Packaging

All APDS-9702 options are shipped in ESD proof packaging.

This part is compliant to JEDEC MSL 1.

Recommended Storage Conditions

Storage Temperature	The units in tape and reel are recommended to be kept in a controlled climate environment, with temp at 25 +5/-10°C and relative humidity at 55 +/-15%.
Time from unsealing to soldering	This part is compliant to JEDEC MSL-1 (unlimited floor life at < 30°C / 85%RH)

chanhvinh.com

Recommended Reflow Profile

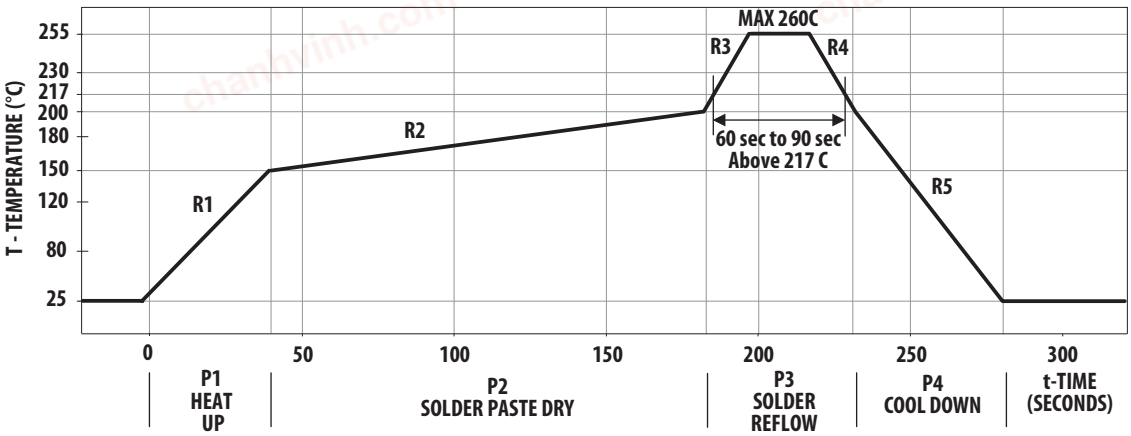

The reflow profile is a straight-line representation of a nominal temperature profile for a convective reflow solder process. The temperature profile is divided into four process zones, each with different ΔT/Δtime temperature change rates or duration. The ΔT/Δtime rates or duration are detailed in the above table. The temperatures are measured at the component to printed circuit board connections.

In **process zone P1**, the PC board and APDS-9702 pins are heated to a temperature of 150°C to activate the flux in the solder paste. The temperature ramp up rate, R1, is limited to 3°C per second to allow for even heating of both the PC board and APDS-9702 pins.

Process zone P2 should be of sufficient time duration (100 to 180 seconds) to dry the solder paste. The temperature is raised to a level just below the liquidus point of the solder, usually 200°C (392°F).

Process zone P3 is the solder reflow zone. In zone P3, the temperature is quickly raised above the liquidus point of solder to 255°C (491°F) for optimum results. The dwell time above the liquidus point of solder should be between 20 and 40 seconds. It usually takes about 20 seconds to assure proper coalescing of the solder balls into liquid solder and the formation of good solder connections. Beyond a dwell time of 40 seconds, the intermetallic growth within the solder connections becomes excessive, resulting in the formation of weak and unreliable connections. The temperature is then rapidly reduced to a point below the solidus temperature of the solder, usually 200°C (392°F), to allow the solder within the connections to freeze solid.

Process zone P4 is the cool down after solder freeze. The cool down rate, R5, from the liquidus point of the solder to 25°C (77°F) should not exceed 6°C per second maximum. This limitation is necessary to allow the PC board and APDS-9702 pins to change dimensions evenly, putting minimal stresses on the APDS-9702.

It is recommended to perform reflow soldering no more than twice.

For product information and a complete list of distributors, please go to our web site: **www.avagotech.com**

Avago, Avago Technologies, and the A logo are trademarks of Avago Technologies in the United States and other countries.
Data subject to change. Copyright © 2005-2010 Avago Technologies. All rights reserved.
AV02-2238EN - March 3, 2010