chanhvinh.com

BROADCOM®

Data Sheet

AFBR-S4N22P014M

NUV-MT Silicon Photomultiplier Array

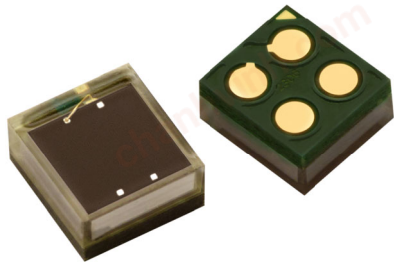

Description

The Broadcom® AFBR-S4N22P014M is a single-channel silicon photomultiplier (SiPM) array that is used for ultra-sensitive precision measurements of single photons. This SiPM is based on NUV-MT technology, which combines improved photo-detection efficiency (PDE) with decreased dark count rate and reduced crosstalk compared to the NUV-HD technology.

The SPAD pitch is 40 µm. Larger areas can be covered by tiling multiple AFBR-S4N22P014M SiPMs. The encapsulation for good mechanical stability and robustness is realized by an epoxy clear mold compound, which is highly transparent down to UV wavelengths, resulting in a broad response in the visible light spectrum with high sensitivity toward the blue and near-UV region of the light spectrum. The SiPM is best suited for the detection of low-level pulsed light sources, especially for detection of Cherenkov or scintillation light from the most common organic (plastic) and inorganic scintillator materials (for example, LSO, LYSO, BGO, NaI, CsI, BaF, $LaBr_3$). This product is lead-free and compliant with RoHS.

Features

- High PDE (63% at 420 nm)
- 4-side tileable, with high fill factors
- Cell pitch: 40 µm
- Highly transparent epoxy protection layer
- Operating temperature range from –20°C to +60°C
- Excellent SPTR and CRT
- Excellent uniformity of breakdown voltage and gain between devices
- RoHS, CFM, and REACH compliant

Applications

- X-ray and gamma-ray detection
- Nuclear medicine
- Positron emission tomography
- Safety and security
- Physics experiments
- Cherenkov detection

Block Diagram

Figure 1: AFBR-S4N22P014M Block Diagram

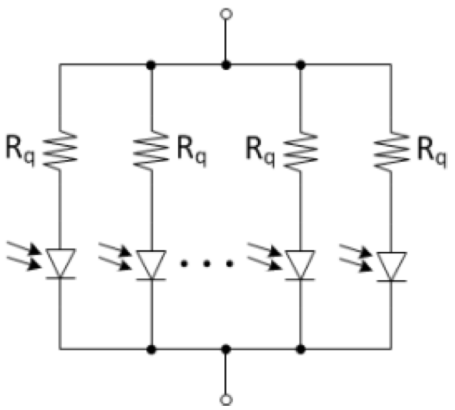

chanhvinh.com

Mechanical Outline and Pad Layout

The AFBR-S4N22P014M has two anode and two cathode pads. Figure 2 shows the pad layout, and Figure 3 shows the recommended landing pattern.

Figure 2: Pad Layout (Bottom View)

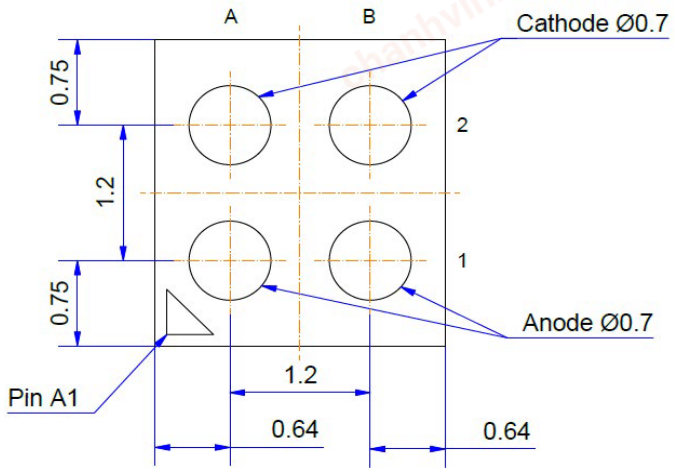

Pad	Function
A1, B1	Anode
A2, B2	Cathode

NOTE:

1. Dimensions are in mm.
2. “A” stands for anode; “C” stands for cathode.

Figure 3: Recommended Landing Pattern

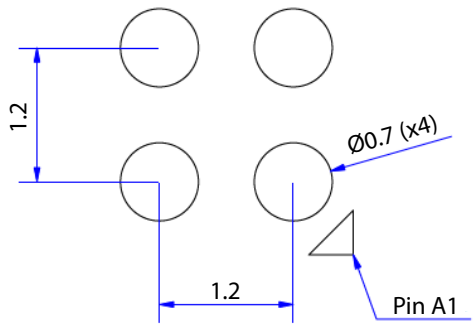

chanhvinh.com

Regulatory Compliance Table

Feature	Test Method	Performance
Electrostatic Discharge (ESD) to the Electrical Pins, Human-Body Model (contact ESD)	JESD22-A114	See Absolute Maximum Ratings.
Electrostatic Discharge (ESD) to the Electrical Pins, Charged-Device Model	JESD22-C101F	See Absolute Maximum Ratings.
Restriction of Hazardous Substances Directive	RoHS Directive 2011/65/EU Annex II	Certified compliant.

Reflow Soldering Diagram

Figure 4: Recommended Reflow Soldering Profile

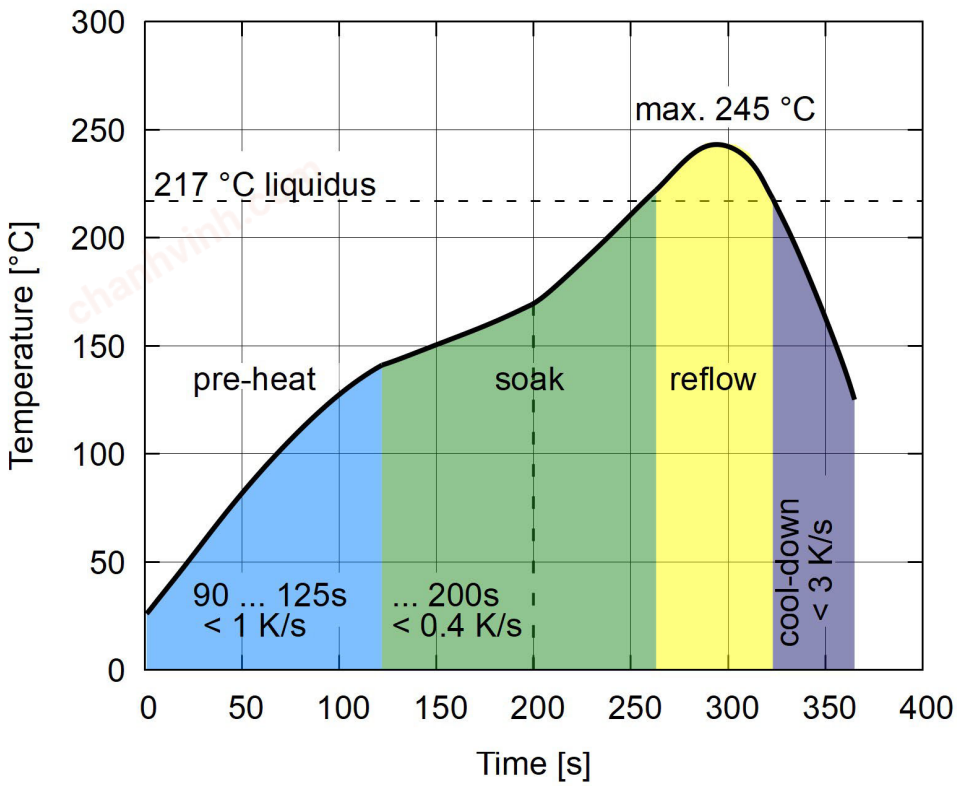

For further information on the recommended solder process and precautions, refer to the *ABR-S4NxxPyy4M NUV-MT Handling and Soldering Application Note*.

chanhvinh.com

Absolute Maximum Ratings

Stresses in excess of the absolute maximum ratings can cause damage to the devices. Limits apply to each parameter in isolation. Absolute maximum ratings are those values beyond which damage to the device may occur if these limits are exceeded for other than a short period of time.

Parameter	Symbol	Min.	Max.	Unit
Storage Temperature	T_{SG}	–20	+60	°C
Operating Temperature[a]	T_A	–20	+60	°C
Soldering Temperature[b,c]	T_{SOLD}	—	245	°C
Lead Soldering Time[b,c]	t_{SOLD}	—	60	seconds
Electrostatic Discharge Voltage Capability (HBM)	ESD_{HBM}	—	2	kV
Electrostatic Discharge Voltage Capability (CDM)	ESD_{CDM}	—	500	V
Operating Overvoltage	V_{OV}	—	16	V

a. Biased at constant voltage = 12V above breakdown.

b. The tile is reflow solderable according to the solder diagram shown in Figure 4.

c. In accordance with Broadcom's PCN-272931, there will be a transition in the moisture level definition (MLD) for the NUV-MT SiPM series from MSL 6 to MSL 5. Refer to the label of your devices for details on the MLD. For parts in accordance with MSL 6, baking at 125°C for 16 hours is mandatory before soldering. The floor life is 4 hours at 30°C and 60% relative humidity. For parts with an MLD according to MSL 5, the floor life is 48 hours at 30°C and 60% relative humidity. No baking is required before soldering unless the floor life is exceeded. For more details on soldering and handling, refer to Broadcom's application note AFBR-S4NxxPyy4M-AN602.

Single Device Specification

Features are measured at 25°C unless otherwise specified.

Geometric Features

Parameter	Symbol	Value	Unit
Package Outer Dimensions	PD	2.71 × 2.48	mm^2
Single Device Area	DA	2.14 × 2.14	mm^2
Active Area	AA	2 × 2	mm^2
Micro Cell Pitch	L_{CELL}	40	µm
Number of Micro Cells per Element	N_{CELLS}	2464	—

chanhvinh.com

Optical and Electrical Features

Features are measured at 12V OV and 25°C unless otherwise specified.

Parameter	Symbol	Min.	Typ.[a]	Max.	Unit	Reference Plots
Spectral Range	λ	250	—	900	nm	Figure 5
Peak Sensitivity Wavelength	λ_{PK}	—	420	—	nm	Figure 5
Breakdown Voltage	V_{BD}	32	32.5	33	V	Figure 7
Temperature Coefficient of Breakdown Voltage	$\Delta V_{BD}/\Delta T$	—	30	—	mV/°C	—
Photo-Detection Efficiency[b]	PDE	—	63	—	%	Figure 5, Figure 6
Dark Current per Element	I_D	—	0.98	—	µA	Figure 7
Dark Count Rate per Element[c]	DCR	—	0.5	—	Mcps	Figure 8
Dark Count Rate per Unit Area	DCR_{mm2}	—	125	—	kcps/mm^2	—
Gain	G	—	7.3	—	× 10^6	Figure 9
Optical Crosstalk	P_{XTALK}	—	23	—	%	Figure 10
Afterpulsing Probability	P_{AD}	—	< 1	—	%	—
Recharge Time Constant	T_{FALL}	—	55	—	ns	—
Nominal Terminal Capacitance[d]	C_T	—	160	—	pF	—
Temperature Coefficient of Gain[e]	$\Delta G/\Delta T$	—	1.46	—	× 10^4/°C	—

a. Measured at 12V OV.

b. Measured at peak sensitivity wavelength. The measurement does not include correlated noise, such as afterpulsing or optical crosstalk.

c. Measured at 0.5-p.e. amplitude. The measurement does not include delayed correlated events.

d. Measured using the input sine wave with f = 200 kHz and Vin = 500 mV.

e. Calculated from the gain dependence on V and the breakdown voltage temperature coefficient: $dG/dT = dG/dV \times dV_{BD}/dT$.

chanhvinh.com

Reference Plots

Features are measured at 25°C unless otherwise specified. The plotted data represents typical values.

Figure 5: PDE vs. Wavelength

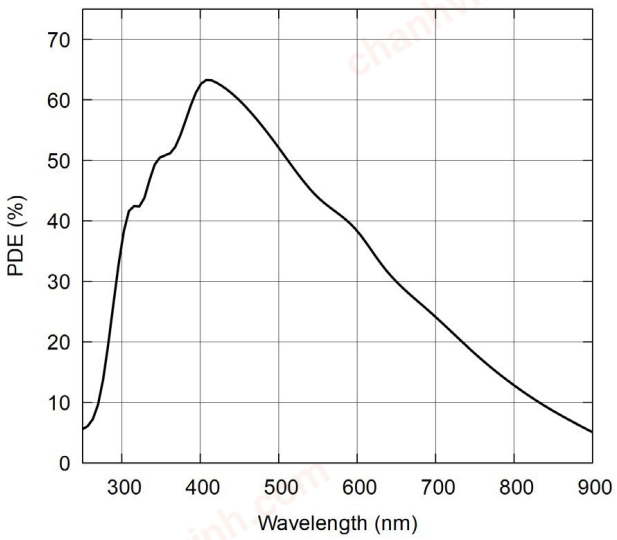

Figure 6: PDE at Peak λ vs. OV (Overmolded Package)

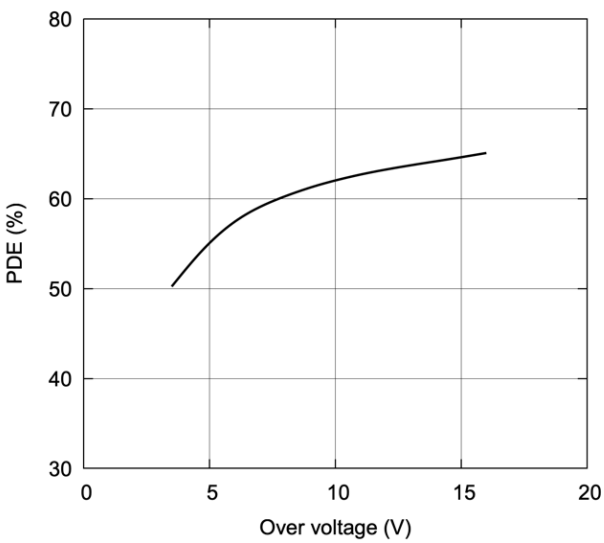

Figure 7: Reverse IV Curve

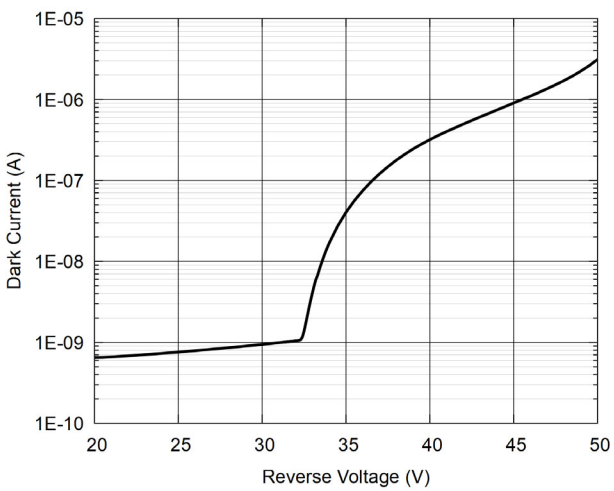

Figure 8: Dark Count Rate vs. OV

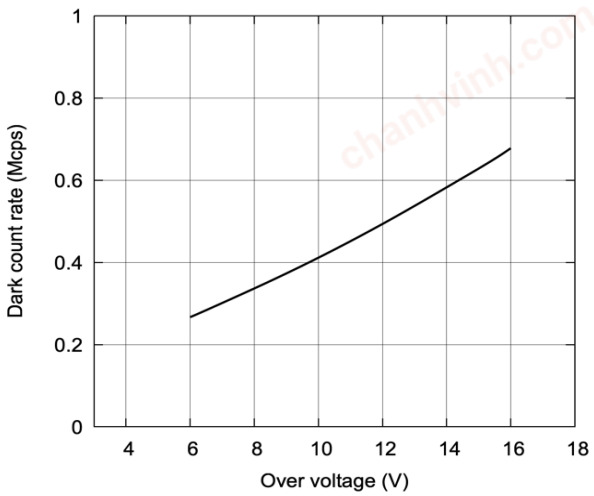

chanhvinh.com

Figure 9: Gain vs. OV

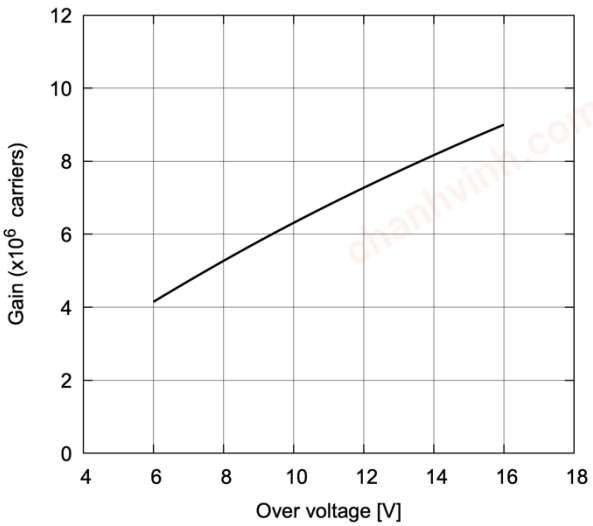

Figure 10: Correlated Noise vs. OV

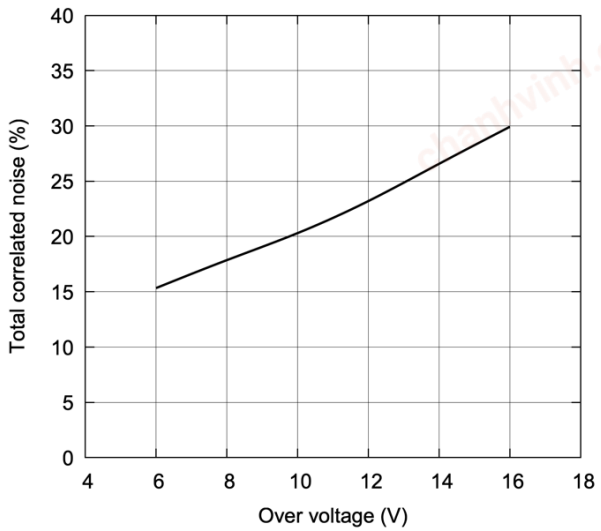

Figure 11: Typical Single-Photon Waveform at 700-MHz Bandwidth over 25 Ohm

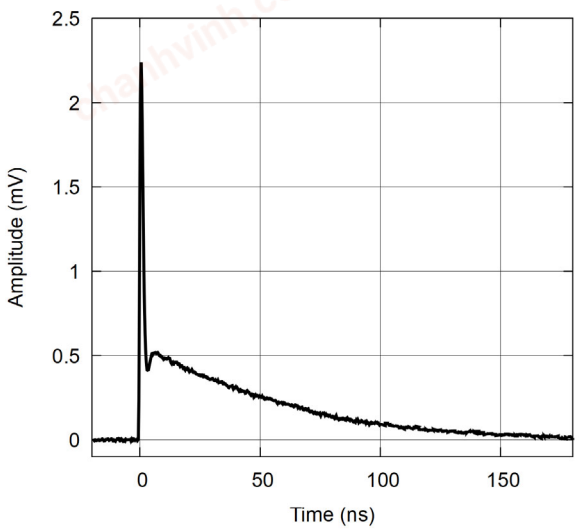

chanhvinh.com

Mechanical Data – Package Outline

Figure 12: Package Outline Drawing

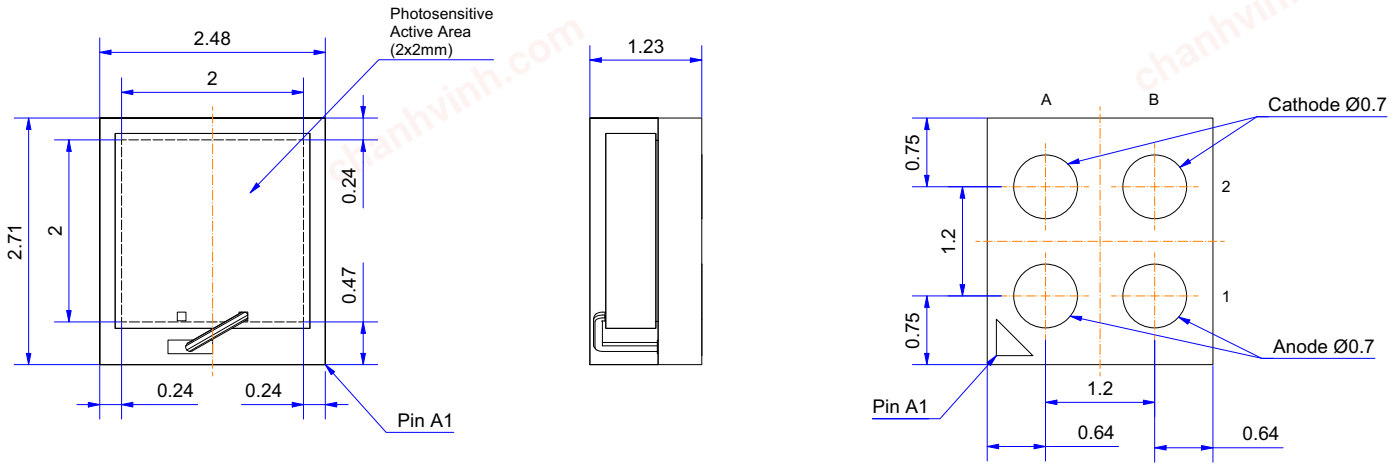

NOTES

1) Dimensions are in millimeters.
2) Nominal values rounded to two decimal places - Suppression of following zeros

Copyright © 2022–2024 Broadcom. All Rights Reserved. The term “Broadcom” refers to Broadcom Inc. and/or its subsidiaries. For more information, go to www.broadcom.com. All trademarks, trade names, service marks, and logos referenced herein belong to their respective companies.

Broadcom reserves the right to make changes without further notice to any products or data herein to improve reliability, function, or design. Information furnished by Broadcom is believed to be accurate and reliable. However, Broadcom does not assume any liability arising out of the application or use of this information, nor the application or use of any product or circuit described herein, neither does it convey any license under its patent rights nor the rights of others.

BROADCOM®