chanhvinh.com

BROADCOM®

Data Sheet

Qmini AFBR-S20M2XX

Miniature Spectrometer with Onboard Processing for Mobile Applications and Industrial Integration



Key Features

- Spectral resolution from 0.5 nm
- Miniature size
- Customizable wavelength range, sensitivity, and resolution
- Powerful onboard processing and evaluation

Applications

- Color measurement
- Chemical analysis
- Quality control
- System integration
- Counterfeit detection
- Environmental analysis
- Biomedical applications
- Light analysis
- Process control and monitoring

Overview

Within an amazingly small design, the Qmini delivers technical specifications that are unprecedented at this size. Its compact design enables tight integration in applications where space is limited, like mobile analysis devices. The Qmini includes a powerful electronics board that enables:

- Full processing of spectra in the device (offset, nonlinearity, dark spectrum, and spectral sensitivity)
- Averaging and smoothing
- Binning and buffering of spectra

The Qmini also features a replaceable entrance slit, reduced stray light, and lower power consumption.

Part Number	Product Configuration	Wavelength Range	Typ. Spectral Resolution (FWHM)
AFBR-S20M2UV	Qmini UV	220 nm to 400 nm	0.5 nm
AFBR-S20M2VI	Qmini VIS	370 nm to 750 nm	0.8 nm
AFBR-S20M2NI	Qmini NIR	730 nm to 1080 nm	0.8 nm
AFBR-S20M2WU	Qmini Wide UV Sensitivity optimized at 300 nm	225 nm to 1000 nm	1.5 nm
AFBR-S20M2WV	Qmini Wide VIS Sensitivity optimized at 500 nm	225 nm to 1000 nm	1.5 nm
AFBR-S20M2VN	Qmini VIS/NIR	480 nm to 1100 nm	1.5 nm

Specifications	
Focal length	50 mm
Grating	300 or 600 lines/mm
Entrance slit	20 µm (changeable)
Dynamic range	1300:1
Numerical aperture	0.1
Stray light	<0.1 %
Exposure time range	3 µs to 600s
Detector	2500-pixel linear CCD sensor
A/D converter	16-bit
Calibration	Wavelength, sensitivity, nonlinearity, and multiple dark spectra stored in device
Internal memory	32 MB (>3000 spectra)
Transfer speed to PC	USB 2.0 High-Speed
Optical Interface	SMA connector
Digital interfaces	USB 2.0 with Type-C connector, SPI, UART
Dimensions	64.0 mm × 42.0 mm × 14.5 mm
Weight	60g
Operating temperature	–15°C to 60°C (non-condensing)
Storage temperature	–25°C to 70°C
Power consumption	5V DC, up to 130 mA
PC operating system	Windows 10, 8, 7, Vista, XP

chanhvinh.com

Application Software

Every Qmini spectrometer includes Waves user software developed for general-purpose spectroscopy applications. Waves includes sophisticated algorithms for data acquisition and evaluation, which provides the following features through a clear and straightforward user interface.

- Take and display series of spectra
- Automatic exposure control with dark spectrum interpolation
- Import most ASCII-based file formats
- Export as ASCII table to almost any numerical analysis software
- Comprehensive tools for displaying and analyzing spectra
- Strip charts for comparing characteristic values between multiple spectra including peak follower in real time
- Graph printing and export to PDF
- Dynamic peak finder (no need to set a threshold level)
- Dark spectrum interpolation
- Transmission, absorption, and reflection measurements
- Colorimetry

Waves is very easy to use and very intuitive. Various spectrum evaluation options are available with minimal effort and only a few mouse clicks. For example, to zoom in, adjust the zoom slider. To move around, adjust the scrollbar. To change the x-axis unit, select the corresponding button. Values such as peaks or colorimetry are instantly calculated as soon as a spectrum is taken. Waves is available as a free download from our website.

Software Library

A software development kit (SDK) is also included to control the spectrometer and take spectra from your own software. It consists of a Windows DLL library for the .NET framework, documentation, and sample code. The SDK can be used with any programming language that can use .NET DLLs, including C#, Visual Basic .NET, C++, Delphi, LabVIEW, Matlab, and Mathematica.

Communication Protocol

The spectrometer can also be directly controlled from an embedded microcontroller or other operating systems using the device communication protocol. Just like our application software, the protocol is designed to be both powerful and easy to use for software developers.

Qmini Schematic Drawing

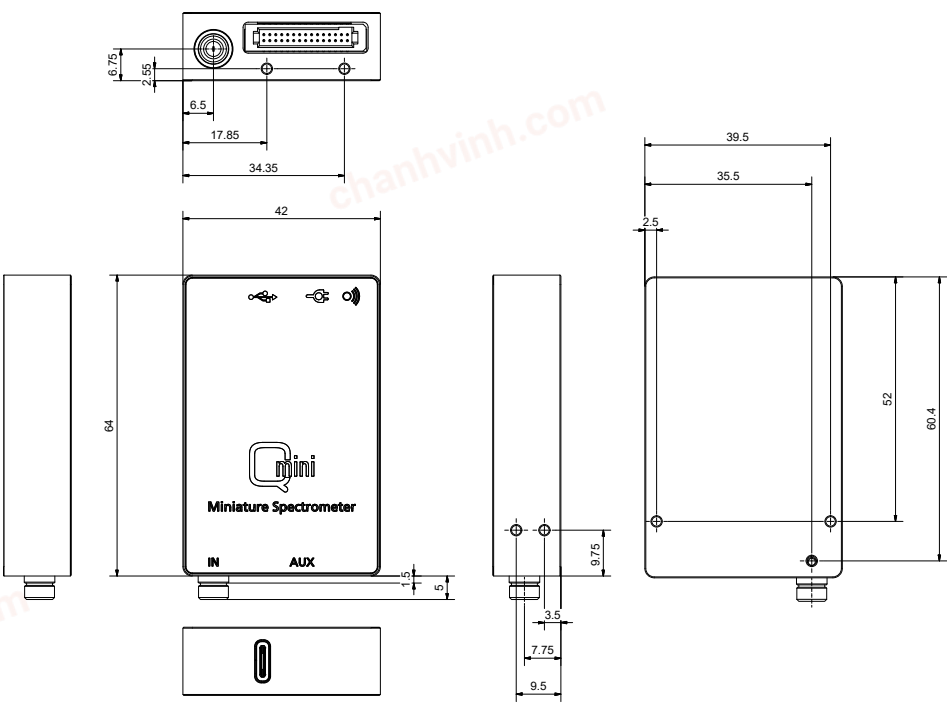

I/O Port

The Qmini includes a new auxiliary connector for analog and digital I/O, communication interfaces and power supply (if USB is not used). The eight digital channels can be configured as trigger input, shutter or flash lamp control, process control, or general purpose I/O pins.

The Qmini supports three trigger modes: software trigger, interval trigger, and external trigger. It can be set to trigger on the start or the end of the exposure period.

BROADCOM®
connecting everything®

For more product information: broadcom.com

Copyright © 2018-2021 Broadcom. All Rights Reserved. Broadcom, the pulse logo, and Connecting everything are among the trademarks of Broadcom. The term "Broadcom" refers to Broadcom Inc. and/or its subsidiaries.
AFBR-S20M2XX-DS102 February 8, 2021