chanhvinh.com

AFBR-S10RX021Z, AFBR-S10RX031Z

Analog Receiver with Versatile Link Connector for Sensing over POF

Data Sheet



Description

The Broadcom® AFBR-S10RX0x1Z receiver provides the system designer with the ability to implement an optical arc flash sensor over 1 mm Plastic Optical Fiber (POF). This receiver features a compact Versatile Link connector. In combination with AFBR-15x9Z transmitter, an arc flash sensor system with system self test feature can be realized.

This product is lead free and compliant with RoHS.

Block Diagram

Figure 1 AFBR-S10RX0x1Z Block Diagram

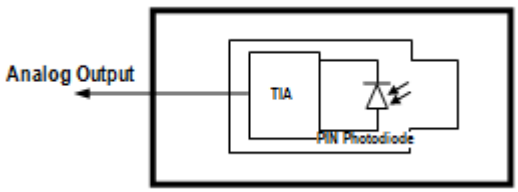

Features

- Receiver consisting of a PD and a TIA integrated in a single IC
- High EMI robustness
- Temperature compensated output voltage
- Fast slew rate
- Compact foot print.
- Temperature range –40 °C to 85 °C
- RoHS compliant
- Versatile Link connector system

Applications

- Arc Flash Detection

Available Part Numbers

Horizontal Package	AFBR-S10RX021Z
Vertical Package	AFBR-S10RX031Z

chanhvinh.com

Receiver

The receiver utilizes an ASIC with integrated photodiode and a linear transimpedance amplifier (TIA). It is packaged into a transfer molded insert, which is furthermore assembled into a Versatile Link plastic housing. This device couples the optical power efficiently from POF fiber to the receiving photodiode. The output voltage is proportional to the coupled input optical power.

Package and Handling Information

Versatile Link packages are made of a flame-retardant material and use the same pad layout as a standard, eight pin dual-in-line package. Versatile Link packages are stackable and are enclosed to provide a dust-resistant seal. Snap action simplex, simplex latching, duplex, and duplex latching connectors are offered with simplex or duplex cables.

Package Housing Color

Versatile Link components and simplex connectors are color-coded to eliminate confusion when making connections. Receiver packages are black.

Handling

Versatile Link components are auto-insertable. When wave soldering is performed with Versatile Link components, the optical port plug should be left in to prevent contamination of the port. Do not use reflow solder processes (i.e., infrared reflow or vapor-phase reflow). Non-halogenated water-soluble fluxes (i.e., 0% chloride), not rosin-based fluxes, are recommended for use with Versatile Link components.

Versatile Link components are moisture-sensitive devices and are shipped in a moisture-sealed bag. If the components are exposed to air for an extended period of time, they may require a baking step before the soldering process. Refer to the special labeling on the shipping tube for details.

Mechanical Dimensions

Figure 2 Package Outline Drawing (Horizontal Module, Left, and Vertical Module, Right)

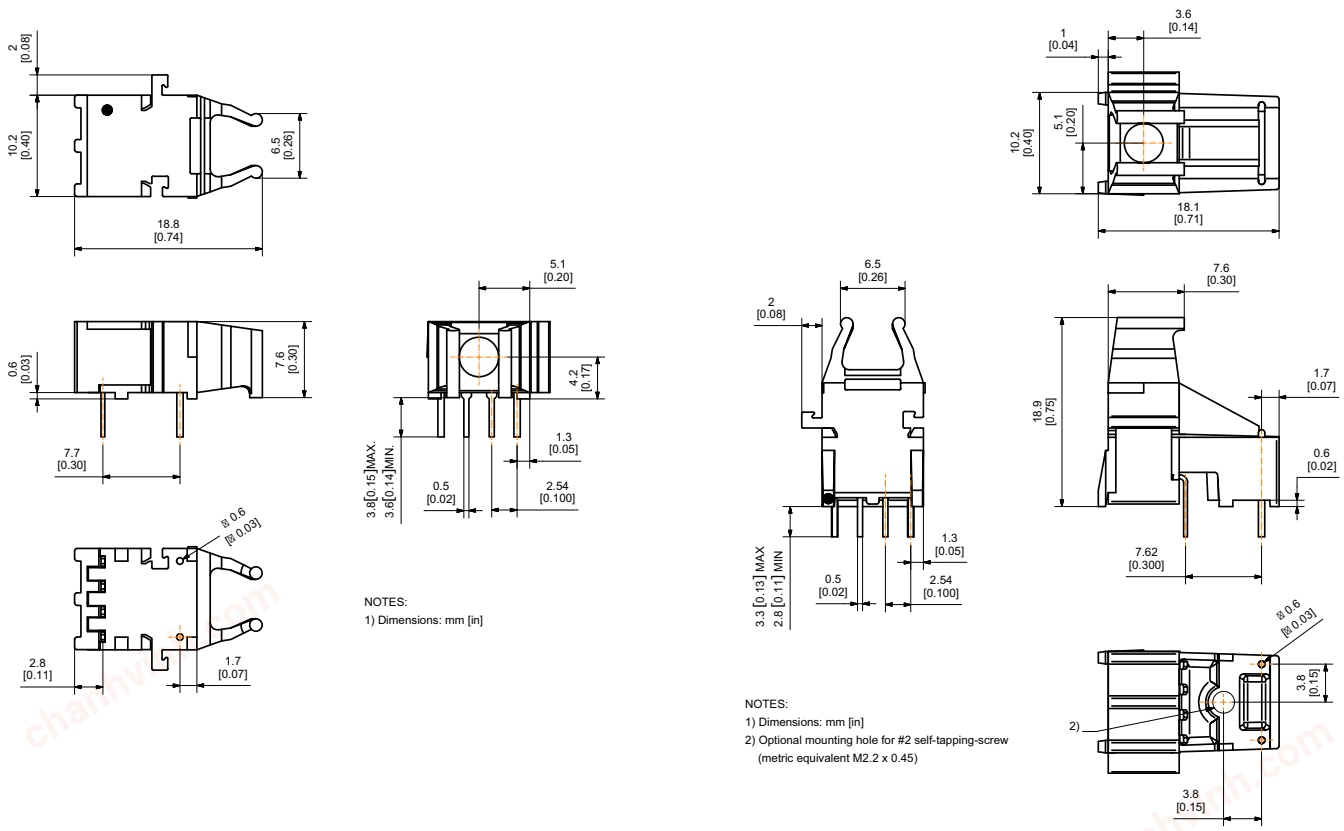

chanhvinh.com

Versatile Link Printed Board Layout Dimensions

Figure 3 PCB Footprint (Horizontal Module, Left, and Vertical Module, Right) – Top View

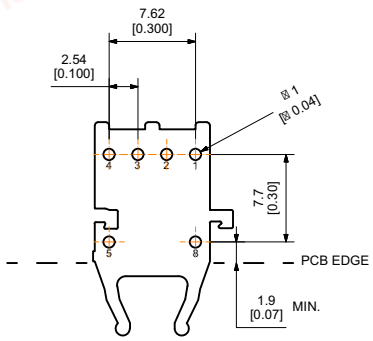

Dimensions in mm (in.).

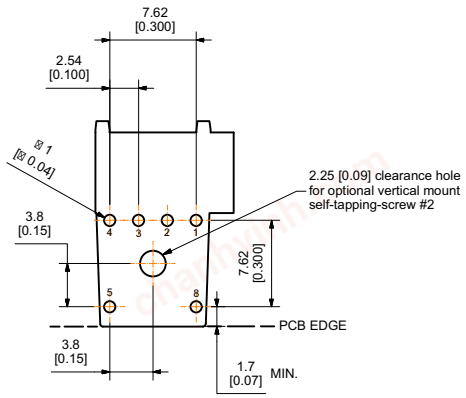

Dimensions in mm (in.).

Interlocked (Stacked) Assemblies

Horizontal packages may be stacked by placing units with pins facing upward. Initially engage the interlocking mechanism by sliding the L bracket body from above into the L slot body of the lower package. Use a straight edge, such as a ruler, to bring all stacked units into uniform alignment. This technique prevents potential harm that could occur to fingers and hands of assemblers from the package pins.

Stacked horizontal packages can be disengaged if necessary. Repeated stacking and unstacking does not cause damage to individual units.

To stack vertical packages, hold one unit in each hand, with the pins facing away and the optical ports on the bottom. Slide the L bracket unit into the L slot unit. The straight edge used for horizontal package alignment is not needed.

Figure 4 Stacking Vertical Modules (Stacking Horizontal Modules, Left, Stacking Vertical Modules, Right)

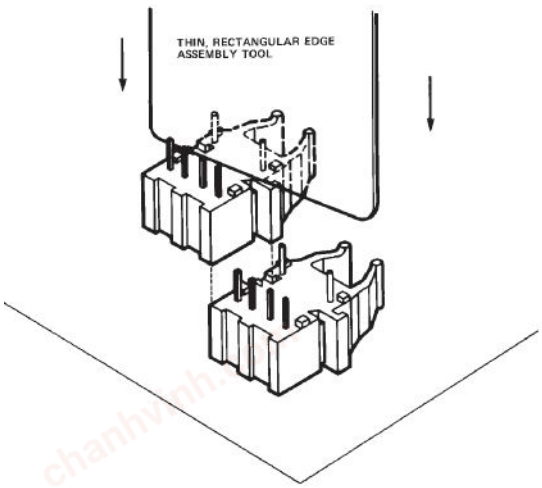

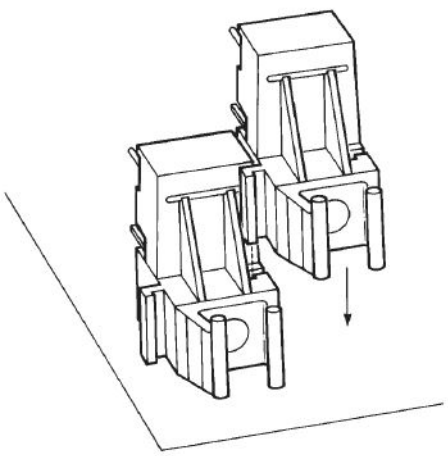

chanhvinh.com

Pin Description and Application Circuitry

Figure 5 Recommended Application Circuit

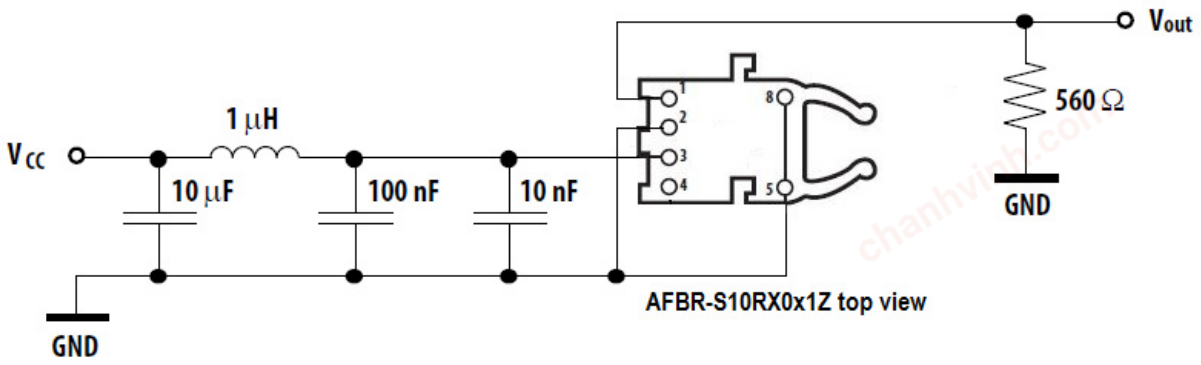

Pin	Name	Description
1	VOUT	Output Voltage
2	GND	Ground
3	VCC	Supply Voltage
4	N.C.	
5	Housing	Recommended to chassis GND
8	Housing	Recommended to chassis GND

Regulatory Compliance Table

Feature	Test Method	Performance
Electrostatic discharge (ESD) to the electrical Pins	ESD22-A114	Withstands up to 2000V HBM applied between the electrical pins.
Immunity	Variation of IEC 61000-4-3	Typically shows no measurable effect from a 15V/m field swept from 8MHz to 1GHz applied to the transceiver when mounted on a circuit board without chassis enclosure.
Component recognition	Underwriter Laboratories	UL File #: E173874 (P/N has to be added to UL file)

chanhvinh.com

Absolute Maximum Ratings

Stresses in excess of the absolute maximum ratings can cause damage to the device. Limits apply to each parameter in isolation, all other parameters having values within the recommended operation conditions. It should not be assumed that limiting values of more than one parameter can be applied to the products at the same time. Exposure to the absolute maximum ratings for extended periods can adversely affect device reliability.

Parameter	Symbol	Min	Max	Unit	Notes
Storage and Ambient Temperature	$T_{S,A}$	–40	+85	°C	a
Lead Soldering Temperature	T_{sold}		260	°C	b
Lead Soldering Time	t_{sold}		10	s	b
Receiver Supply Voltage	V_{CC}		6	V	
Electrostatic Discharge Voltage Capability HBM	ESD HBM		2000	V	c

a. Operating the product outside the maximum rated temperature range will compromise its reliability and may damage the product.

b. The receiver is Pb-free wave solderable.

c. ESD Capability for all Pins HBM(Human Body Model) according JESD22-A114

Recommended Operating Conditions

Parameter	Symbol	Min	Typ	Max	Unit	Notes
Ambient Temperature	T_A	-40		+85	°C	a
Receiver Supply Voltage	V_{CC}	4.75	5	5.25	V	

a. Electrical and optical specifications of the product are guaranteed across recommended ambient operating temperature range unless otherwise specified.

chanhvinh.com

Electrical and Optical Characteristics

Parameter	Symbol	Min	Typ	Max	Unit	Notes
Maximum Photosensitivity Wavelength	λ_{SMAX}		650		nm	
Photosensitivity Spectral Range	λ_{SR}	300		1100	nm	
Responsivity	Resp	25	40	60	V/mW	a, b
Pulse Output Rise Time (10%–90%)	t_R		40		ns	c
Pulse Output Fall Time (90%–10%)	t_F		60		ns	c
Pulse Width Distortion (in overdrive)	PWD_{OD}			1	µs	d
Pulse Width Distortion (linear operating range)	PWD_{LIN}	–0.5		0.5	µs	a, e
Supply Current	I_{CC}		7	12	mA	Iout=0mA
Output Current	I_{OUT}			10	mA	
Slew Rate	SR		75		V/µs	f
Output Load Impedance	Z_L	500			Ω	For V_{CC}=5.0V
Maximum Output Voltage	V_{OMAX}	4			V	

a. Values measured at an optical power of –12 dBm.

b. Verified at 650 nm.

c. Measured with 560 Ω load. For full swing of the output voltage.

d. Value measured for an optical input pulse of –5 dBm peak, PW = 10 µs, duty cycle = 1/1000. Typically, overdrive condition appears at optical peak input power above –10 dBm.

e. Optical input pulse PW = 10 µs, duty cycle = 1/1000.

f. RL = 560 Ω.

Figure 6 Typical Output Voltage vs. Optical Input Power (Logarithmic Scale

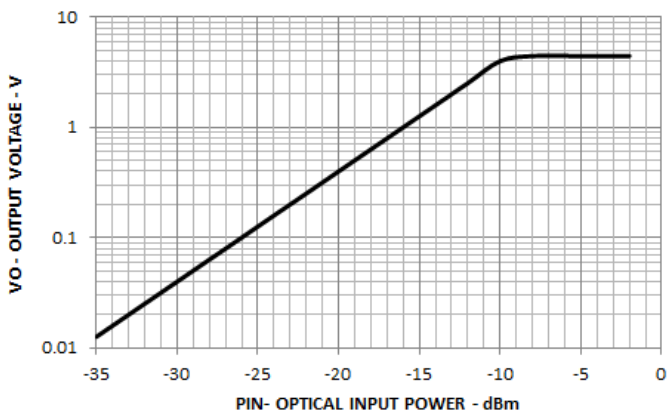

Figure 7 Typical Output Voltage vs. Optical Input Power (Linear Scale

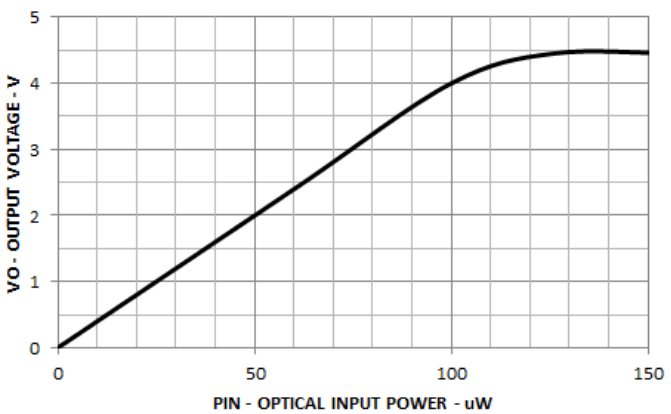

chanhvinh.com

For product information and a complete list of distributors, please go to our web site: www.broadcom.com.

Broadcom, the pulse logo, Connecting everything, Avago Technologies, and the A logo are the trademarks of Broadcom in the United States, certain other countries and/or the EU.

Copyright © 2016–2018 Broadcom. All Rights Reserved.

The term "Broadcom" refers to Broadcom Inc. and/or its subsidiaries. For more information, please visit www.broadcom.com.

Broadcom reserves the right to make changes without further notice to any products or data herein to improve reliability, function, or design.

Information furnished by Broadcom is believed to be accurate and reliable. However, Broadcom does not assume any liability arising out of the application or use of this information, nor the application or use of any product or circuit described herein, neither does it convey any license under its patent rights nor the rights of others.

pub-005792 – June 14, 2018

Lead (Pb) Free
RoHS 6 fully
compliant