chanhvinh.com

# AFBR-5803AQZ and AFBR-5803ATQZ

FDDI, 100 Mb/s ATM, and Fast Ethernet Transceivers in Low Cost 1 x 9 Package Style

## Data Sheet

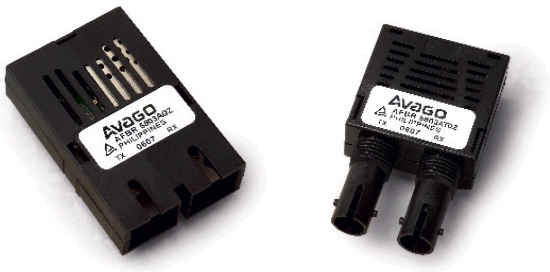

### Description

The AFBR-5800Z family of transceivers from Avago Technologies provide the system designer with products to implement a range of Fast Ethernet, FDDI and ATM (Asynchronous Transfer Mode) designs at the 100 Mb/s-125 MBd rate.

The transceivers are all supplied in the industry standard 1 x 9 SIP package style with either a duplex SC or a duplex ST* connector interface.

### FDDI PMD, ATM and Fast Ethernet 2 km Backbone Links

The AFBR-5803AQZ/ATQZ are 1300 nm products with optical performance compliant with the FDDI PMD standard. The FDDI PMD standard is ISO/IEC 9314-3: 1990 and ANSI X3.166 - 1990.

These transceivers for 2 km multimode fiber backbones are supplied in the small 1 x 9 duplex SC or ST package style.

The AFBR-5803AQZ/ATQZ is useful for both ATM 100 Mb/s interfaces and Fast Ethernet 100 Base-FX interfaces. The ATM Forum User-Network Interface (UNI) Standard, Version 3.0, defines the Physical Layer for 100 Mb/s Multimode Fiber Interface for ATM in Section 2.3 to be the FDDI PMD Standard. Likewise, the Fast Ethernet Alliance defines the Physical Layer for 100 Base-FX for Fast Ethernet to be the FDDI PMD Standard.

ATM applications for physical layers other than 100 Mb/s Multimode Fiber Interface are supported by Avago Technologies. Products are available for both the single mode and the multimode fiber SONET OC-3c (STS-3c) ATM interfaces and the 155 Mb/s-194 MBd multimode fiber ATM interface as specified in the ATM Forum UNI.

Contact your Avago Technologies sales representative for information on these alternative Fast Ethernet, FDDI and ATM products.

### Features

- Full compliance with the optical performance requirements of the FDDI PMD standard
- Full compliance with the FDDI LCF-PMD standard
- Full compliance with the optical performance requirements of the ATM 100 Mb/s physical layer
- Full compliance with the optical performance requirements of 100 Base-FX version of IEEE 802.3u
- Multisourced 1 x 9 package style with choice of duplex SC or duplex ST* receptacle
- Wave solder and aqueous wash process compatible
- Single +3.3 V or +5 V power supply
- RoHS Compliance
- Industrial range -40 to 85C

### Applications

- Multimode fiber backbone links
- Multimode fiber wiring closet to desktop links
- Very low cost multimode fiber links from wiring closet to desktop
- Multimode fiber media converters

*ST is a registered trademark of AT&T Lightguide Cable Connectors.

chanhvinh.com

## Transmitter Sections

The transmitter section of the AFBR-5803AQZ and AFBR-5805Z series utilize 1300 nm Surface Emitting InGaAsP LEDs. These LEDs are packaged in the optical subassembly portion of the transmitter section. They are driven by a custom silicon IC which converts differential PECL logic signals, ECL referenced (shifted) to a +3.3 V or +5 V supply, into an analog LED drive current.

## Receiver Sections

The receiver sections of the AFBR-5803AQZ and AFBR-5805Z series utilize InGaAs PIN photodiodes coupled to a custom silicon transimpedance preamplifier IC. These are packaged in the optical subassembly portion of the receiver.

These PIN/preamplifier combinations are coupled to a custom quantizer IC which provides the final pulse shaping for the logic output and the Signal Detect function. The data output is differential. The signal detect output is single-ended. Both data and signal detect outputs are PECL compatible, ECL referenced (shifted) to a +3.3 V or +5 V power supply.

## Package

The overall package concept for the Avago Technologies transceivers consists of the following basic elements; two optical subassemblies, an electrical subassembly and the housing as illustrated in Figure 1 and Figure 1a.

The package outline drawings and pin out are shown in Figures 2, 2a and 3. The details of this package outline and pin out are compliant with the multisource definition of the 1 x 9 SIP. The low profile of the Avago Technologies transceiver design complies with the maximum height allowed for the duplex SC connector over the entire length of the package.

The optical subassemblies utilize a high volume assembly process together with low cost lens elements which result in a cost effective building block.

The electrical subassembly consists of a high volume multilayer printed circuit board on which the IC chips and various surface-mounted passive circuit elements are attached.

The package includes internal shields for the electrical and optical subassemblies to ensure low EMI emissions and high immunity to external EMI fields.

The outer housing including the duplex SC connector receptacle or the duplex ST ports is molded of filled nonconductive plastic to provide mechanical strength and electrical isolation. The solder posts of the Avago Technologies design are isolated from the circuit design of the transceiver and do not require connection to a ground plane on the circuit board.

The transceiver is attached to a printed circuit board with the nine signal pins and the two solder posts which exit the bottom of the housing. The two solder posts provide the primary mechanical strength to withstand the loads imposed on the transceiver by mating with duplex or simplex SC or ST connectored fiber cables.

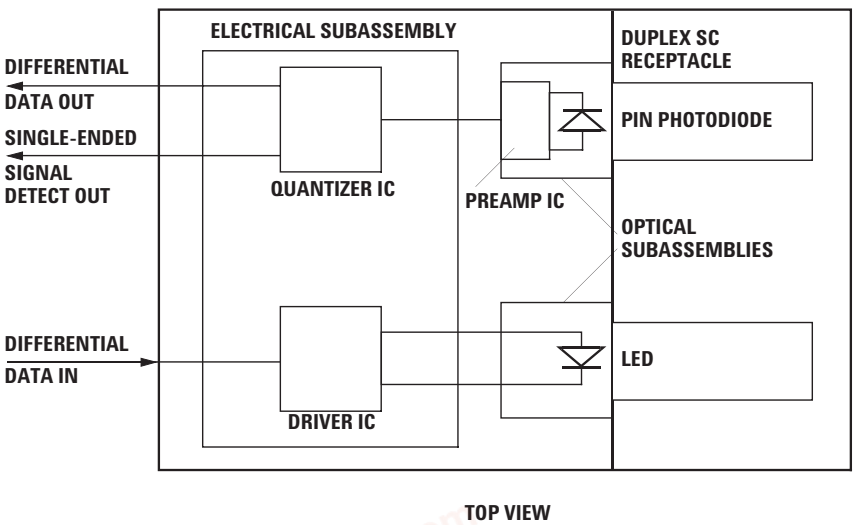


**Figure 1. SC Connector Block Diagram.**

chanhvinh.com

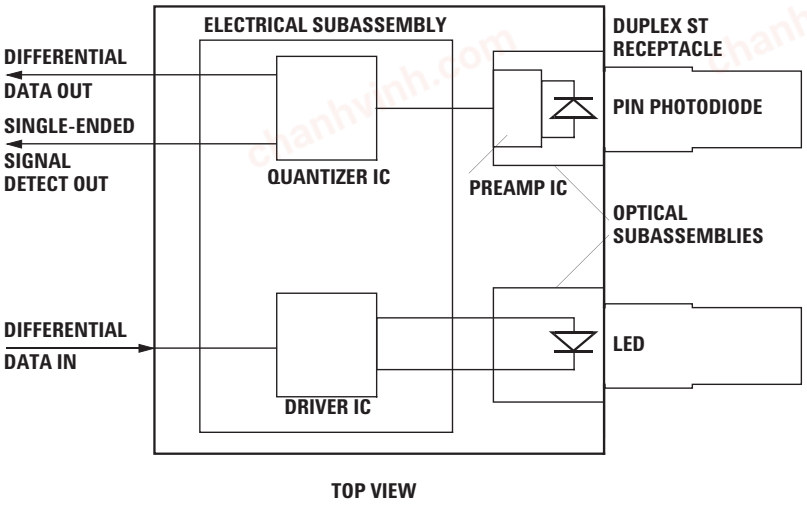


Figure 1a. ST Connector Block Diagram.

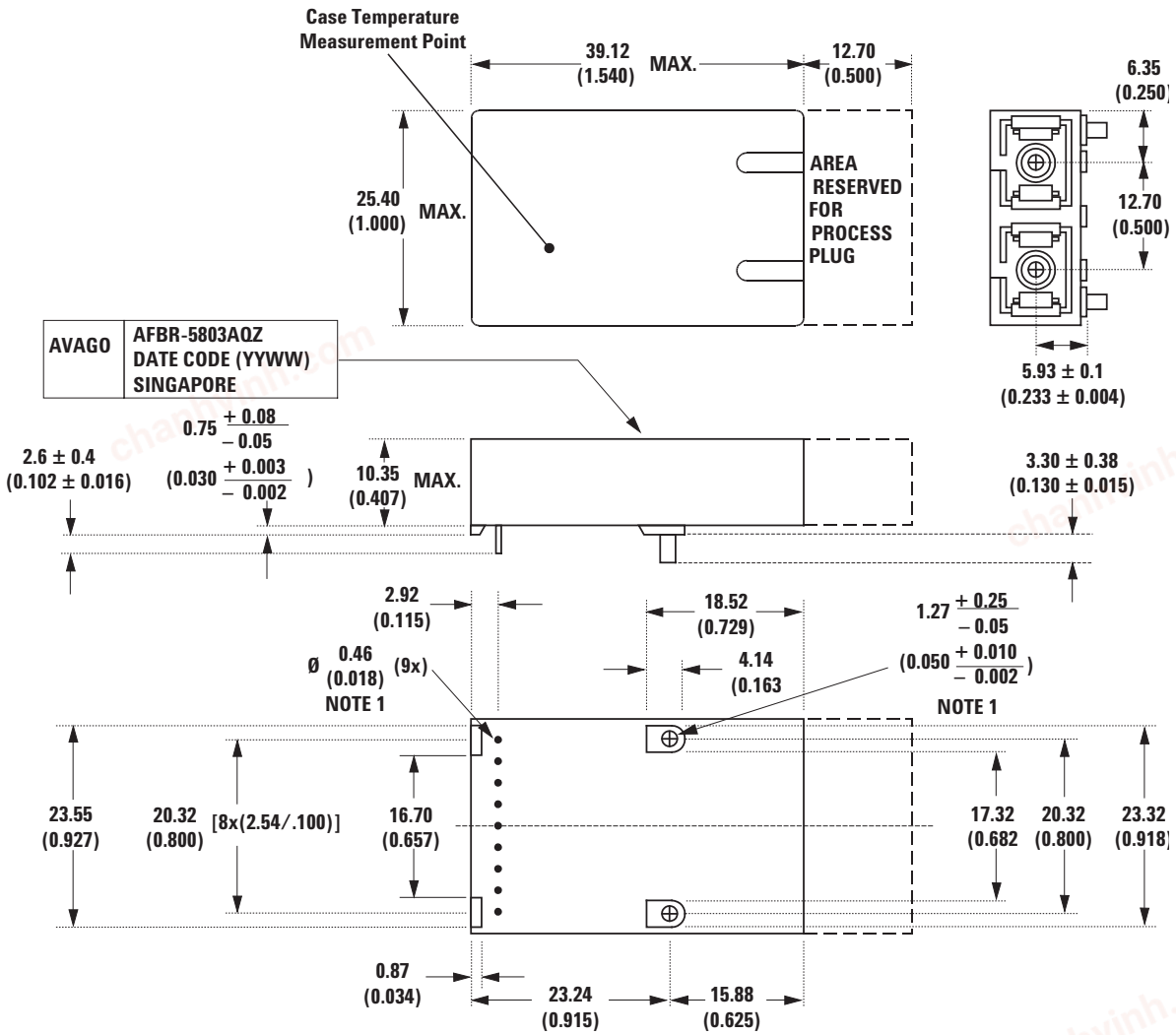


Note 1: Phosphor bronze is the base material for the posts & pins. For lead-free soldering, the solder posts have Tin Copper over Nickel plating, and the electrical pins have pure Tin over Nickel plating.

DIMENSIONS ARE IN MILLIMETERS (INCHES).

Figure 2. SC Connector Package Outline Drawing with standard height.

chanhvinh.com

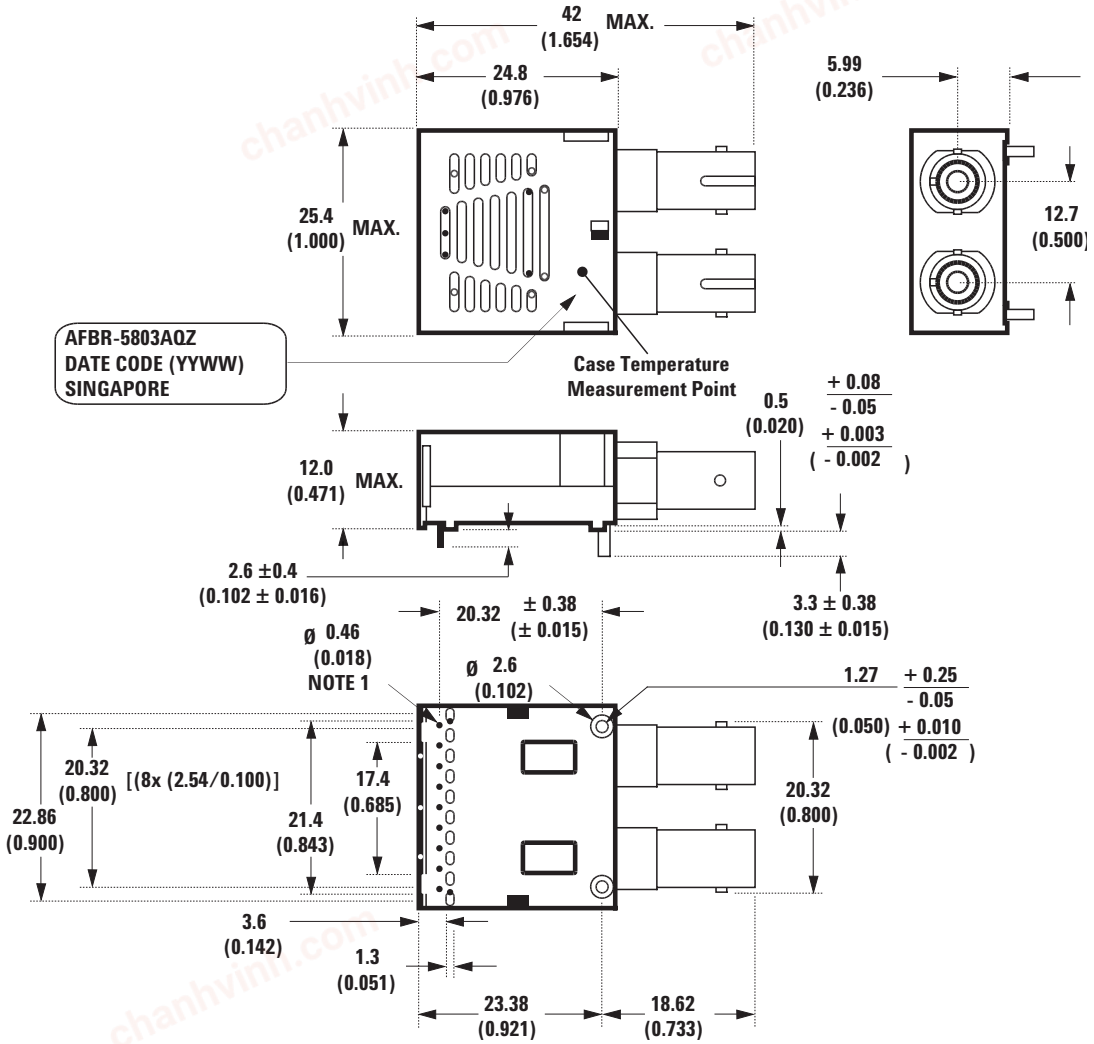


Note 1: Phosphor bronze is the base material for the posts & pins. For lead-free soldering, the solder posts have Tin Copper over Nickel plating, and the electrical pins have pure Tin over Nickel plating.

DIMENSIONS IN MILLIMETERS (INCHES).

**Figure 2a. ST Connector Package Outline Drawing with standard height.**

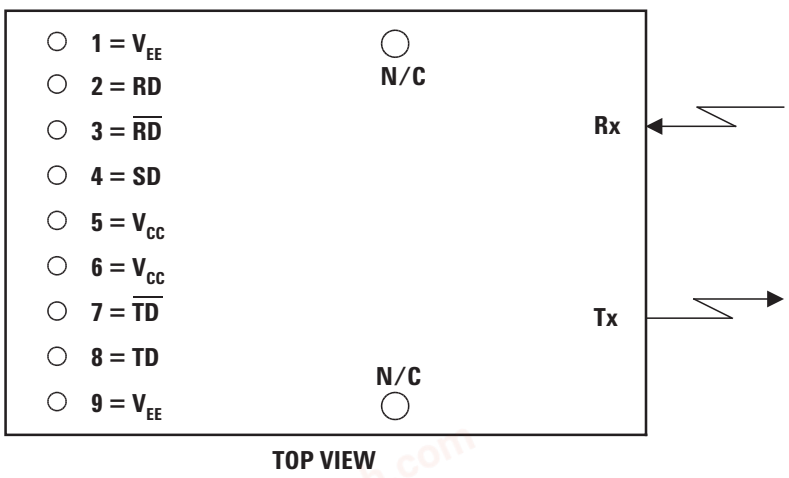


**Figure 3. Pin Out Diagram.**

chanhvinh.com

## Application Information

The Applications Engineering group in the Avago Technologies Fiber Optics Communication Division is available to assist you with the technical understanding and design trade-offs associated with these transceivers. You can contact them through your Avago Technologies sales representative.

The following information is provided to answer some of the most common questions about the use of these parts.

## Transceiver Optical Power Budget versus Link Length

Optical Power Budget (OPB) is the available optical power for a fiber optic link to accommodate fiber cable losses plus losses due to in-line connectors, splices, optical switches, and to provide margin for link aging and unplanned losses due to cable plant reconfiguration or repair.

Figure 4 illustrates the predicted OPB associated with the transceiver series specified in this data sheet at the Beginning of Life (BOL). These curves represent the attenuation and chromatic plus modal dispersion losses associated with the 62.5/125 µm and 50/125 µm fiber cables only. The area under the curves represents the remaining OPB at any link length, which is available for overcoming non-fiber cable related losses.

Avago Technologies LED technology has produced 1300 nm LED devices with lower aging characteristics than normally associated with these technologies in the industry. The industry convention is 1.5 dB aging for 1300 nm LEDs. The Avago Technologies 1300 nm LEDs will experience less than 1 dB of aging over normal commercial equipment mission life periods. Contact your Avago Technologies sales representative for additional details.

Figure 4 was generated with a Avago Technologies fiber optic link model containing the current industry conventions for fiber cable specifications and the FDDI PMD and LCF-PMD optical parameters. These parameters are reflected in the guaranteed performance of the transceiver specifications in this data sheet. This same model has been used extensively in the ANSI and IEEE committees, including the ANSI X3T9.5 committee, to establish the optical performance requirements for various fiber optic interface standards. The cable parameters used come from the ISO/IEC JTC1/SC 25/WG3 Generic Cabling for Customer Premises per DIS 11801 document and the EIA/TIA-568-A Commercial Building Telecommunications Cabling Standard per SP-2840.

## Transceiver Signaling Operating Rate Range and BER Performance

For purposes of definition, the symbol (Baud) rate, also called signaling rate, is the reciprocal of the shortest symbol time. Data rate (bits/sec) is the symbol rate divided by the encoding factor used to encode the data (symbols/bit).

When used in Fast Ethernet, FDDI and ATM 100 Mb/s applications the performance of the 1300 nm transceivers is guaranteed over the signaling rate of 10 MBd to 125 MBd to the full conditions listed in individual product specification tables.

The transceivers may be used for other applications at signaling rates outside of the 10 MBd to 125 MBd range with some penalty in the link optical power budget primarily caused by a reduction of receiver sensitivity. Figure 5 gives an indication of the typical performance of these 1300 nm products at different rates.

These transceivers can also be used for applications which require different Bit Error Rate (BER) performance. Figure 6 illustrates the typical trade-off between link BER and the receivers input optical power level.

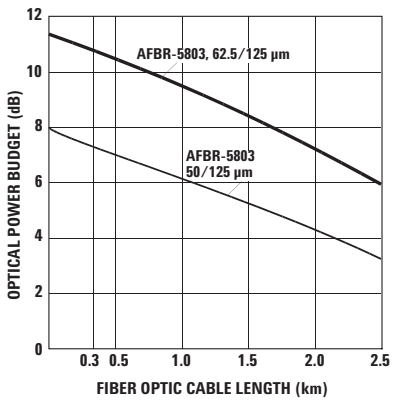


**Figure 4. Optical Power Budget at BOL versus Fiber Optic Cable Length.**

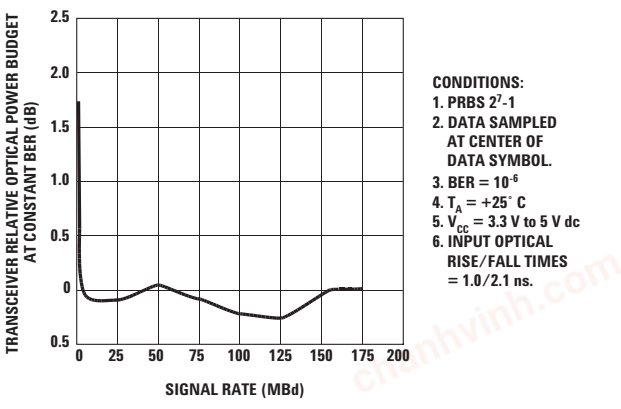


**Figure 5. Transceiver Relative Optical Power Budget at Constant BER vs. Signaling Rate.**

chanhvinh.com

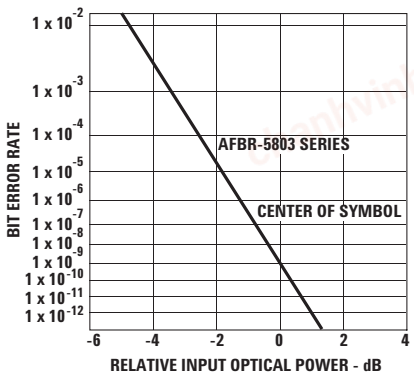


CONDITIONS:
1. 155 MBd
2. PRBS $2^7$-1
3. CENTER OF SYMBOL SAMPLING
4. $T_A$ = +25°C
5. $V_{CC}$ = 3.3 V to 5 V dc
6. INPUT OPTICAL RISE/FALL TIMES = 1.0/2.1 ns.

**Figure 6. Bit Error Rate vs. Relative Receiver Input Optical Power.**

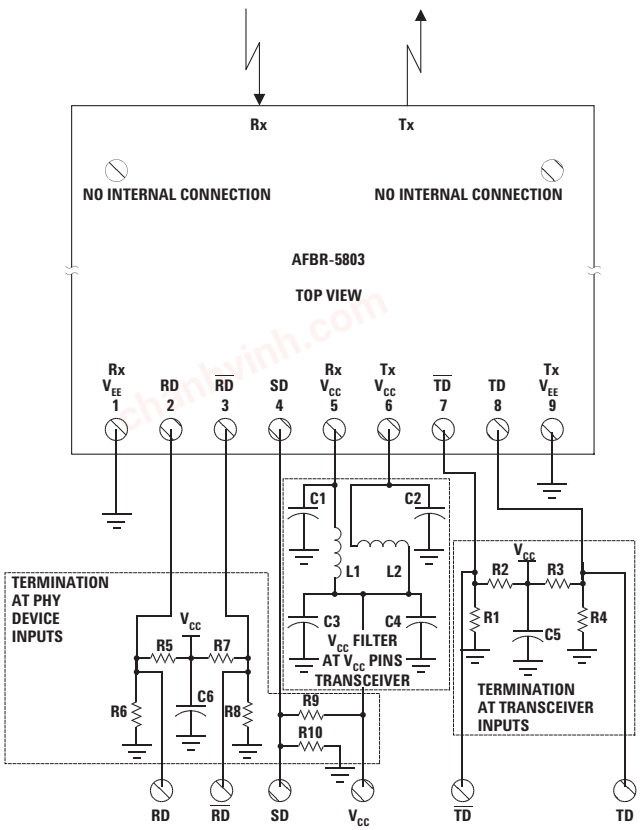


NOTES:
THE SPLIT-LOAD TERMINATIONS FOR ECL SIGNALS NEED TO BE LOCATED AT THE INPUT OF DEVICES RECEIVING THOSE ECL SIGNALS. RECOMMEND 4-LAYER PRINTED CIRCUIT BOARD WITH 50 OHM MICROSTRIP SIGNAL PATHS BE USED.
R1 = R4 = R6 = R8 = R10 = 130 OHMS FOR +5.0 V OPERATION, 82 OHMS FOR +3.3 V OPERATION.
R2 = R3 = R5 = R7 = R9 = 82 OHMS FOR +5.0 V OPERATION, 130 OHMS FOR +3.3 V OPERATION.
C1 = C2 = C3 = C5 = C6 = 0.1 µF.
C4 = 10 µF.
L1 = L2 = 1 µH COIL OR FERRITE INDUCTOR.

**Figure 7. Recommended Decoupling and Termination Circuits**

## Transceiver Jitter Performance

The Avago Technologies 1300 nm transceivers are designed to operate per the system jitter allocations stated in Tables E1 of Annexes E of the FDDI PMD and LCF-PMD standards.

The Avago Technologies 1300 nm transmitters will tolerate the worst case input electrical jitter allowed in these tables without violating the worst case output jitter requirements of Sections 8.1 Active Output Interface of the FDDI PMD and LCF-PMD standards.

The Avago Technologies 1300 nm receivers will tolerate the worst case input optical jitter allowed in Sections 8.2 Active Input Interface of the FDDI PMD and LCF-PMD standards without violating the worst case output electrical jitter allowed in the Tables E1 of the Annexes E.

The jitter specifications stated in the following 1300 nm transceiver specification tables are derived from the values in Tables E1 of Annexes E. They represent the worst case jitter contribution that the transceivers are allowed to make to the overall system jitter without violating the Annex E allocation example. In practice the typical contribution of the Avago Technologies transceivers is well below these maximum allowed amounts.

chanhvinh.com

## Recommended Handling Precautions

Avago Technologies recommends that normal static precautions be taken in the handling and assembly of these transceivers to prevent damage which may be induced by electrostatic discharge (ESD). The AFBR-5800 series of transceivers meet MIL-STD-883C Method 3015.4 Class 2 products.

Care should be used to avoid shorting the receiver data or signal detect outputs directly to ground without proper current limiting impedance.

## Solder and Wash Process Compatibility

The transceivers are delivered with protective process plugs inserted into the duplex SC or duplex ST connector receptacle. This process plug protects the optical subassemblies during wave solder and aqueous wash processing and acts as a dust cover during shipping.

These transceivers are compatible with either industry standard wave or hand solder processes.

## Shipping Container

The transceiver is packaged in a shipping container designed to protect it from mechanical and ESD damage during shipment or storage.

## Board Layout - Decoupling Circuit and Ground Planes

It is important to take care in the layout of your circuit board to achieve optimum performance from these transceivers. Figure 7 provides a good example of a schematic for a power supply decoupling circuit that works well with these parts. It is further recommended that a contiguous ground plane be provided in the circuit board directly under the transceiver to provide a low inductance ground for signal return current. This recommendation is in keeping with good high frequency board layout practices.

## Board Layout - Hole Pattern

The Avago Technologies transceiver complies with the circuit board "Common Transceiver Footprint" hole pattern defined in the original multisource announcement which defined the 1 x 9 package style. This drawing is reproduced in Figure 8 with the addition of ANSI Y14.5M compliant dimensioning to be used as a guide in the mechanical layout of your circuit board.

## Board Layout - Mechanical

For applications providing a choice of either a duplex SC or a duplex ST connector interface, while utilizing the same pinout on the printed circuit board, the ST port needs to protrude from the chassis panel a minimum of 9.53 mm for sufficient clearance to install the ST connector.

Please refer to Figure 8a for a mechanical layout detailing the recommended location of the duplex SC and duplex ST transceiver packages in relation to the chassis panel.

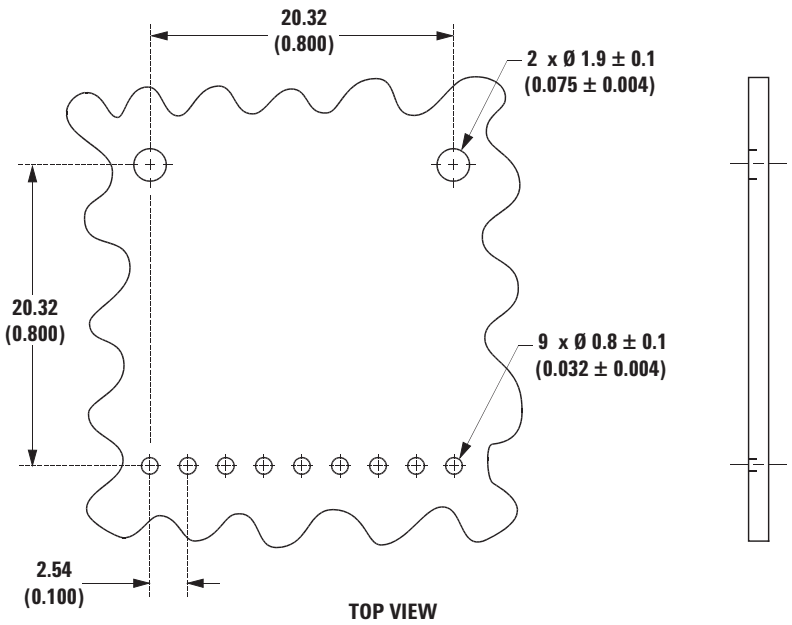


DIMENSIONS ARE IN MILLIMETERS (INCHES)

**Figure 8. Recommended Board Layout Hole Pattern**

chanhvinh.com

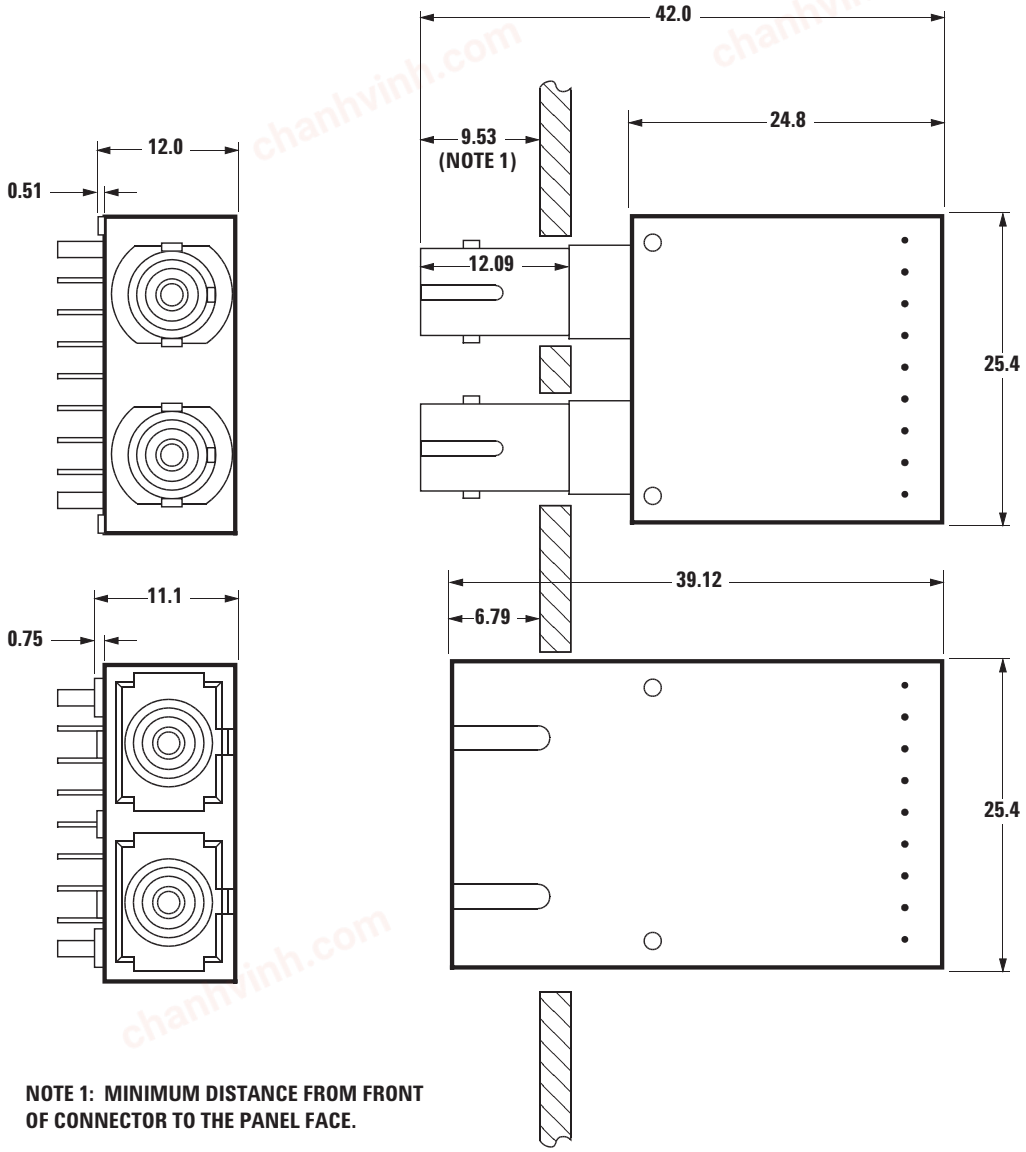


**Figure 8a. Recommended Common Mechanical Layout for SC and ST 1 x 9 Connectored Transceivers.**

## Regulatory Compliance

These transceiver products are intended to enable commercial system designers to develop equipment that complies with the various international regulations governing certification of Information Technology Equipment. See the Regulatory Compliance Table for details. Additional information is available from your Avago Technologies sales representative.

## Electrostatic Discharge (ESD)

There are two design cases in which immunity to ESD damage is important.

The first case is during handling of the transceiver prior to mounting it on the circuit board. It is important to use normal ESD handling precautions for ESD sensitive devices. These precautions include using grounded wrist straps, work benches, and floor mats in ESD controlled areas.

The second case to consider is static discharges to the exterior of the equipment chassis containing the transceiver parts. To the extent that the duplex SC connector is exposed to the outside of the equipment chassis it may be subject to whatever ESD system level test criteria that the equipment is intended to meet.

chanhvinh.com

## Regulatory Compliance Table

| Feature | Test Method | Performance |
|---|---|---|
| Electrostatic Discharge (ESD) to the Electrical Pins | MIL-STD-883 Method 3015.4 | Meets Class 1 (<1999 Volts) Withstand up to 1500 V applied between electrical pins. |
| Electrostatic Discharge (ESD) to the Duplex SC Receptacle | Variation of IEC 801-2 | Typically withstand at least 25 kV without damage when the Duplex SC Connector Receptacle is contacted by a Human Body Model probe. |
| Electromagnetic Interference (EMI) | FCC Class B CENELEC CEN55022 Class B (CISPR 22B) VCCI Class 2 | Transceivers typically provide a 13 dB margin (with duplex SC receptacle) or a 9 dB margin (with duplex ST receptacles ) to the noted standard limits. However, it should be noted that final margin depends on the customer's board and chassis design. |
| Immunity | Variation of IEC 61000-4-3 | Typically show no measurable effect from a 10 V/m field swept from 10 to 450 MHz applied to the transceiver when mounted to a circuit card without a chassis enclosure. |

## Electromagnetic Interference (EMI)

Most equipment designs utilizing these high speed transceivers from Avago Technologies will be required to meet the requirements of FCC in the United States, CENELEC EN55022 (CISPR 22) in Europe and VCCI in Japan.

In all well-designed chassis, two 0.5" holes for ST connectors to protrude through will provide 4.6 dB more shielding than one 1.2" duplex SC rectangular cutout. Thus, in a well-designed chassis, the duplex ST 1 x 9 transceiver emissions will be identical to the duplex SC 1 x 9 transceiver emissions.

## Immunity

Equipment utilizing these transceivers will be subject to radio-frequency electromagnetic fields in some environments. These transceivers have a high immunity to such fields.

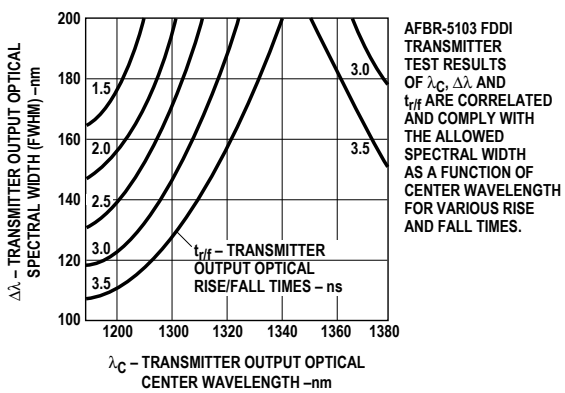


**Figure 9. Transmitter Output Optical Spectral Width (FWHM) vs. Transmitter Output Optical Center Wavelength and Rise/Fall Times.**

For additional information regarding EMI, susceptibility, ESD and conducted noise testing procedures and results on the 1 x 9 Transceiver family, please refer to Applications Note 1075, *Testing and Measuring Electromagnetic Compatibility Performance of the AFBR-510X/520X Fiber Optic Transceivers.*

## Transceiver Reliability and Performance Qualification Data

The 1 x 9 transceivers have passed Avago Technologies reliability and performance qualification testing and are undergoing ongoing quality monitoring. Details are available from your Avago Technologies sales representative.

## Accessory Duplex SC Connectored Cable Assemblies

Avago Technologies recommends for optimal coupling the use of flexible-body duplex SC connectored cable.

## Accessory Duplex ST Connectored Cable Assemblies

Avago Technologies recommends the use of Duplex Push-Pull connectored cable for the most repeatable optical power coupling performance.

chanhvinh.com

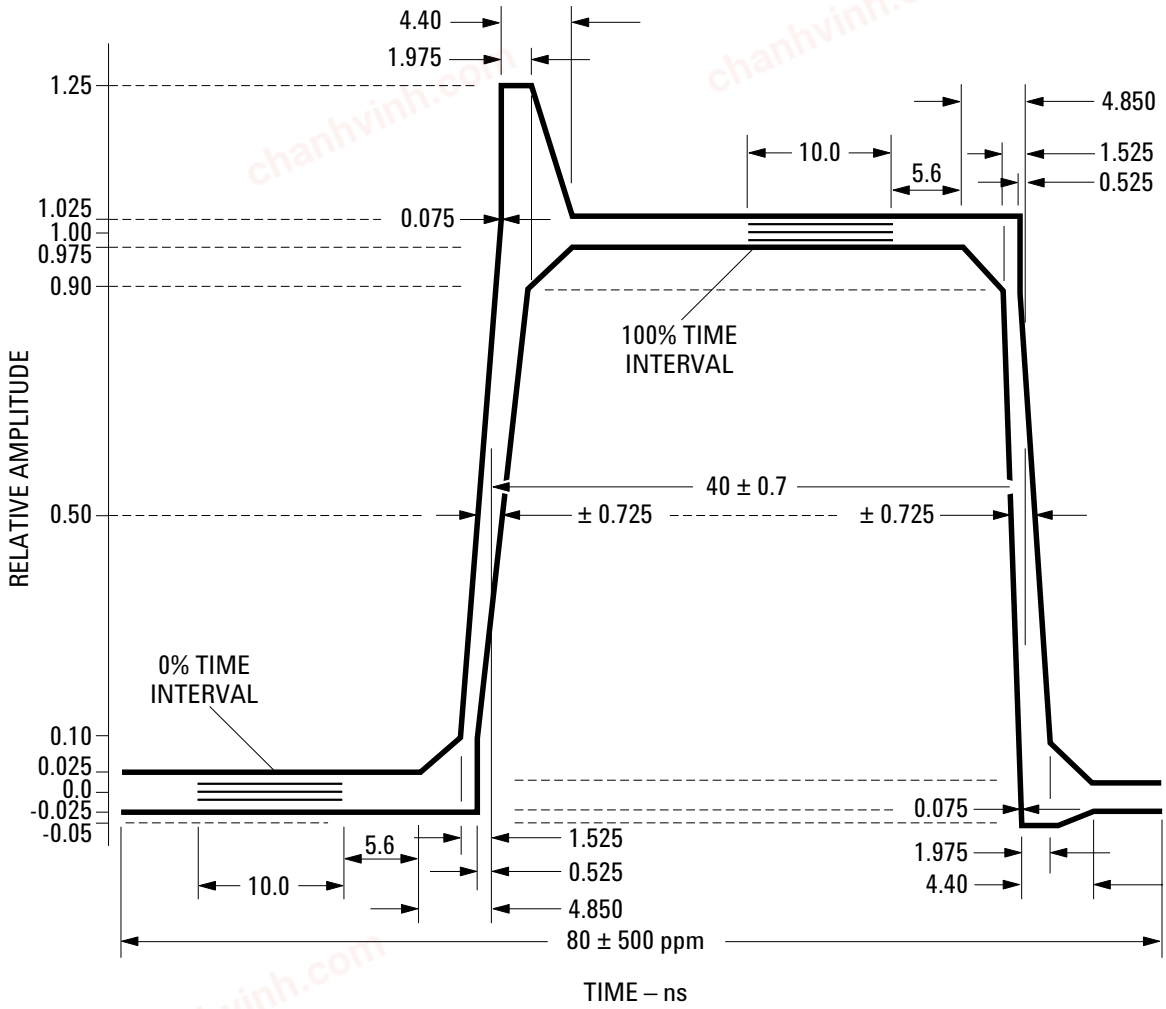


THE AFBR-5103Z OUTPUT OPTICAL PULSE SHAPE SHALL FIT WITHIN THE BOUNDARIES OF THE PULSE ENVELOPE FOR RISE AND FALL TIME MEASUREMENTS.

**Figure 10. Output Optical Pulse Envelope.**

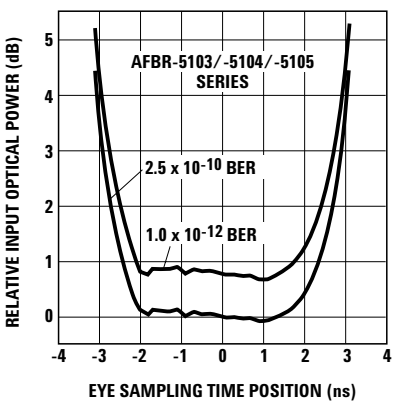


**CONDITIONS:**
1. $T_A$ = 25 C
2. $V_{CC}$ = 5 Vdc
3. INPUT OPTICAL RISE/FALL TIMES = 1.0/2.1 ns.
4. INPUT OPTICAL POWER IS NORMALIZED TO CENTER OF DATA SYMBOL.
5. NOTE 20 AND 21 APPLY.

**Figure 11. Relative Input Optical Power vs. Eye Sampling Time Position.**

chanhvinh.com

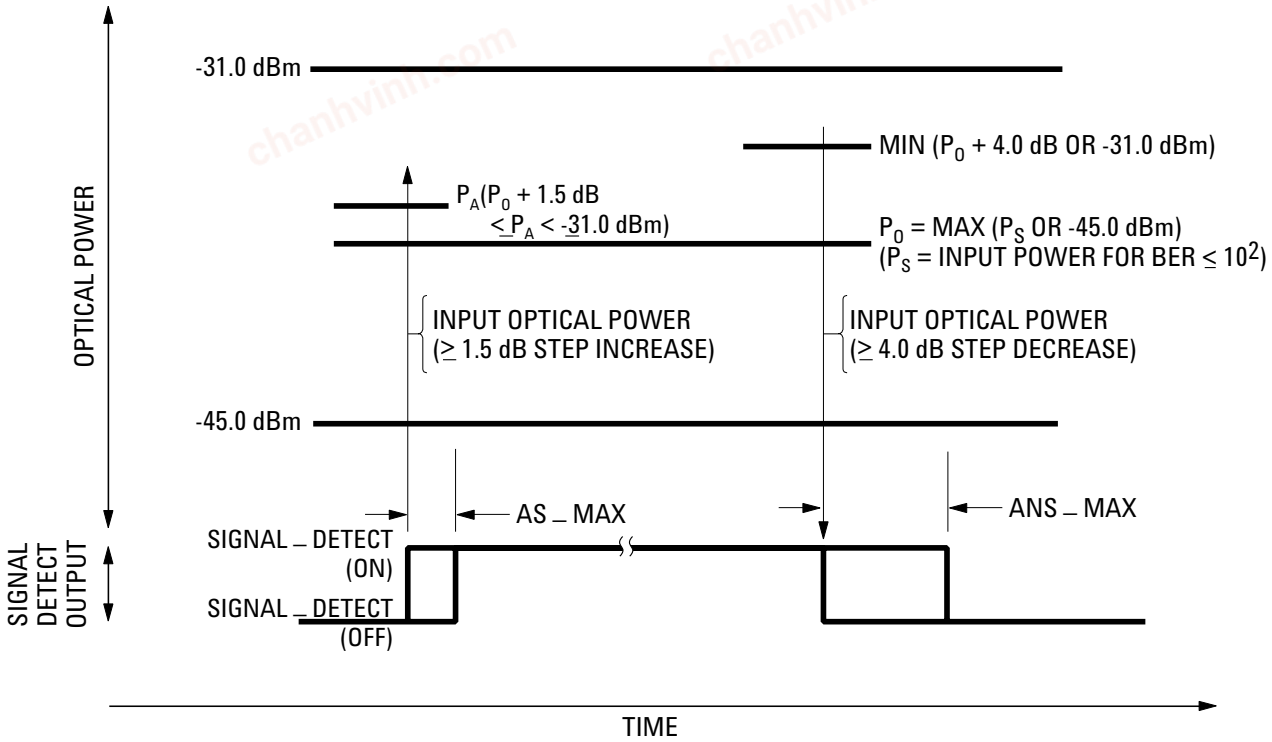


AS_MAX — MAXIMUM ACQUISITION TIME (SIGNAL).
AS_MAX IS THE MAXIMUM SIGNAL_DETECT ASSERTION TIME FOR THE STATION.
AS_MAX SHALL NOT EXCEED 100.0 µs. THE DEFAULT VALUE OF AS_MAX IS 100.0 µs.

ANS_MAX — MAXIMUM ACQUISITION TIME (NO SIGNAL).
ANS_MAX IS THE MAXIMUM SIGNAL_DETECT DEASSERTION TIME FOR THE STATION.
ANS_MAX SHALL NOT EXCEED 350 µs. THE DEFAULT VALUE OF AS_MAX IS 350 µs.

**Figure 12. Signal Detect Thresholds and Timing.**

chanhvinh.com

## Absolute Maximum Ratings

Stresses in excess of the absolute maximum ratings can cause catastrophic damage to the device. Limits apply to each parameter in isolation, all other parameters having values within the recommended operating conditions. It should not be assumed that limiting values of more than one parameter can be applied to the product at the same time. Exposure to the absolute maximum ratings for extended periods can adversely affect device reliability.

| Parameter | Symbol | Min. | Typ. | Max. | Unit | Reference |
|---|---|---|---|---|---|---|
| Storage Temperature | $T_S$ | -40 | | +100 | °C | |
| Lead Soldering Temperature | $T_{SOLD}$ | | | +260 | °C | |
| Lead Soldering Time | $t_{SOLD}$ | | | 10 | sec. | |
| Supply Voltage | $V_{CC}$ | -0.5 | | 7.0 | V | |
| Data Input Voltage | $V_I$ | -0.5 | | $V_{CC}$ | V | |
| Differential Input Voltage | $V_D$ | | | 1.4 | V | Note 1 |
| Output Current | $I_O$ | | | 50 | mA | |

## Recommended Operating Conditions

| Parameter | Symbol | Min. | Typ. | Max. | Unit | Reference |
|---|---|---|---|---|---|---|
| Ambient Operating Temperature AFBR-5803AQZ/5803ATQZ | $T_A$ | -40 | | +85 | °C | Note A |
| Supply Voltage | $V_{CC}V_{CC}$ | 3.1354.75 | | 3.55.25 | VV | |
| Data Input Voltage - Low | $V_{IL}$ - $V_{CC}$ | -1.810 | | -1.475 | V | |
| Data Input Voltage - High | $V_{IH}$ - $V_{CC}$ | -1.165 | | -0.880 | V | |
| Data and Signal Detect Output Load | $R_L$ | | 50 | | Ω | Note 2 |

**Notes:**

A. Ambient Operating Temperature corresponds to transceiver case temperature of -40 °C mininum to +100 °C maximum with necessary airflow applied. Recommended case temperature measurement point can be found in Figure 2.

## Transmitter Electrical Characteristics

(AFBR-5803AQZ/AFBR-5803ATQZ: $T_A$ = -40°C to +85°C, $V_{CC}$ = 3.135 V to 3.5 V or 4.75 V to 5.25 V)

| Parameter | | Symbol | Min. | Typ. | Max. | Unit | Reference |
|---|---|---|---|---|---|---|---|
| Supply Current | | $I_{CC}$ | | 133 | 175 | mA | Note 3 |
| Power Dissipation | at $V_{CC}$ = 3.3 V | $P_{DISS}$ | | 0.45 | 0.6 | W | |
| | at $V_{CC}$ = 5.0 V | $P_{DISS}$ | | 0.76 | 0.97 | W | |
| Data Input Current - Low | | $I_{IL}$ | -350 | -2 | | µA | |
| Data Input Current - High | | $I_{IH}$ | | 18 | 350 | µA | |

chanhvinh.com

## Receiver Electrical Characteristics

(AFBR-5803AQZ/AFBR-5803ATQZ: $T_A$ = -40°C to +85°C, $V_{CC}$ = 3.135 V to 3.5 V or 4.75 V to 5.25 V)

| Parameter | | Symbol | Min. | Typ. | Max. | Unit | Reference |
|---|---|---|---|---|---|---|---|
| Supply Current | | $I_{CC}$ | | 87 | 120 | mA | Note 4 |
| Power Dissipation | at $V_{CC}$ = 3.3 V | $P_{DISS}$ | | 0.15 | 0.25 | W | Note 5 |
| | at $V_{CC}$ = 5.0 V | $P_{DISS}$ | | 0.3 | 0.5 | W | Note 5 |
| Data Output Voltage - Low | | $V_{OL}$ - $V_{CC}$ | -1.83 | | -1.55 | V | Note 6 |
| Data Output Voltage - High | | $V_{OH}$ - $V_{CC}$ | -1.085 | | -0.88 | V | Note 6 |
| Data Output Rise Time | | $t_r$ | 0.35 | | 2.2 | ns | Note 7 |
| Data Output Fall Time | | $t_f$ | 0.35 | | 2.2 | ns | Note 7 |
| Signal Detect Output Voltage - Low | | $V_{OL}$ - $V_{CC}$ | -1.83 | | -1.55 | V | Note 6 |
| Signal Detect Output Voltage - High | | $V_{OH}$ - $V_{CC}$ | -1.085 | | -0.88 | V | Note 6 |
| Signal Detect Output Rise Time | | $t_r$ | 0.35 | | 2.2 | ns | Note 7 |
| Signal Detect Output Fall Time | | $t_f$ | 0.35 | | 2.2 | ns | Note 7 |

## Transmitter Optical Characteristics

(AFBR-5803AQZ/AFBR-5803ATQZ: $T_A$ = -40°C to +85°C, $V_{CC}$ = 3.135 V to 3.5 V or 4.75 V to 5.25 V)

| Parameter | | Symbol | Min. | Typ. | Max. | Unit | Reference |
|---|---|---|---|---|---|---|---|
| Output Optical Power 62.5/125 µm, NA = 0.275 Fiber | BOL<br>EOL | $P_O$ | -19<br>-20 | | -14 | dBm avg. | Note 11 |
| Output Optical Power 50/125 µm, NA = 0.20 Fiber | BOL<br>EOL | $P_O$ | -22.5<br>-23.5 | | -14 | dBm avg. | Note 11 |
| Optical Extinction Ratio | | | | | 10<br>-10 | %<br>dB | Note 12 |
| Output Optical Power at Logic "0" State | | $P_O$ ("0") | | | -45 | dBm avg. | Note 13 |
| Center Wavelength | | $\lambda_C$ | 1270 | 1308 | 1380 | nm | Note 14 |
| Spectral Width<br>- FWHM<br>- nm RMS | | $\Delta\lambda$ | | <br>147<br>63 | | nm | <br>Note 14<br>Figure 9 |
| Optical Rise Time | | $t_r$ | 0.6 | 1.9 | 3.0 | ns | Note 14, 15<br>Figure 9, 10 |
| Optical Fall Time | | $t_f$ | 0.6 | 1.6 | 3.0 | ns | Note 14, 15<br>Figure 9, 10 |
| Duty Cycle Distortion Contributed by the Transmitter | | DCD | | | 0.6 | ns p-p | Note 16 |
| Data Dependent Jitter Contributed by the Transmitter | | DDJ | | | 0.6 | ns p-p | Note 17 |
| Random Jitter Contributed by the Transmitter | | RJ | | | 0.69 | ns p-p | Note 18 |

chanhvinh.com

## Receiver Optical and Electrical Characteristics

(AFBR-5803AQZ/AFBR-5803ATQZ: $T_A$ = -40°C to +85°C, $V_{CC}$ = 3.135 V to 3.5 V or 4.75 V to 5.25 V)

| Parameter | Symbol | Min. | Typ. | Max. | Unit | Reference |
|---|---|---|---|---|---|---|
| Input Optical Power Minimum at Window Edge | $P_{IN\ Min.}$ (W) | | -33.9 | -31 | dBm avg. | Note 19 Figure 11 |
| Input Optical Power Minimum at Eye Center | $P_{IN\ Min.}$ (C) | | -35.2 | -31.8 | dBm avg. | Note 20 Figure 11 |
| Input Optical Power Maximum | $P_{IN\ Max.}$ | -14 | | | dBm avg. | Note 19 |
| Operating Wavelength | λ | 1270 | | 1380 | nm | |
| Duty Cycle Distortion Contributed by the Receiver | DCD | | | 0.4 | ns p-p | Note 8 |
| Data Dependent Jitter Contributed by the Receiver | DDJ | | | 1.0 | ns p-p | Note 9 |
| Random Jitter Contributed by the Receiver | RJ | | | 2.14 | ns p-p | Note 10 |
| Signal Detect - Asserted | $P_A$ | $P_D$ + 1.5 dB | | -33 | dBm avg. | Note 21, 22 Figure 12 |
| Signal Detect - Deasserted | $P_D$ | -45 | | | dBm avg. | Note 23, 24 Figure 12 |
| Signal Detect - Hysteresis | $P_A$ - $P_D$ | 1.5 | | | dB | Figure 12 |
| Signal Detect Assert Time (off to on) | AS_Max | 0 | 2 | 100 | µs | Note 21, 22 Figure 12 |
| Signal Detect Deassert Time (on to off) | ANS_Max | 0 | 8 | 350 | µs | Note 23, 24 Figure 12 |

**Notes:**

1. This is the maximum voltage that can be applied across the Differential Transmitter Data Inputs to prevent damage to the input ESD protection circuit.
2. The outputs are terminated with 50 Ω connected to $V_{CC}$ -2 V.
3. The power supply current needed to operate the transmitter is provided to differential ECL circuitry. This circuitry maintains a nearly constant current flow from the power supply. Constant current operation helps to prevent unwanted electrical noise from being generated and conducted or emitted to neighboring circuitry.
4. This value is measured with the outputs terminated into 50 W connected to $V_{CC}$ - 2 V and an Input Optical Power level of -14 dBm average.
5. The power dissipation value is the power dissipated in the receiver itself. Power dissipation is calculated as the sum of the products of supply voltage and currents, minus the sum of the products of the output voltages and currents.
6. This value is measured with respect to $V_{CC}$ with the output terminated into 50 Ω connected to $V_{CC}$ - 2 V.
7. The output rise and fall times are measured between 20% and 80% levels with the output connected to $V_{CC}$ -2 V through 50 Ω.
8. Duty Cycle Distortion contributed by the receiver is measured at the 50% threshold using an IDLE Line State, 125 MBd (62.5 MHz square-wave), input signal. The input optical power level is -20 dBm average. See Application Information - Transceiver Jitter Section for further information.
9. Data Dependent Jitter contributed by the receiver is specified with the FDDI DDJ test pattern described in the FDDI PMD Annex A.5. The input optical power level is -20 dBm average. See Application Information - Transceiver Jitter Section for further information.
10. Random Jitter contributed by the receiver is specified with an IDLE Line State, 125 MBd (62.5 MHz square-wave), input signal. The input optical power level is at maximum "$P_{IN\ Min.}$ (W)". See Application Information - Transceiver Jitter Section for further information.
11. These optical power values are measured with the following conditions:
    - The Beginning of Life (BOL) to the End of Life (EOL) optical power degradation is typically 1.5 dB per the industry convention for long wavelength LEDs. The actual degradation observed in Avago Technologies' 1300 nm LED products is < 1 dB, as specified in this data sheet.
    - Over the specified operating voltage and temperature ranges.
    - With HALT Line State, (12.5 MHz square-wave), input signal.
    - At the end of one meter of noted optical fiber with cladding modes removed.

    The average power value can be converted to a peak power value by adding 3 dB. Higher output optical power transmitters are available on special request.

chanhvinh.com

12. The Extinction Ratio is a measure of the modulation depth of the optical signal. The data "0" output optical power is compared to the data "1" peak output optical power and expressed as a percentage. With the transmitter driven by a HALT Line State (12.5 MHz square-wave) signal, the average optical power is measured. The data "1" peak power is then calculated by adding 3 dB to the measured average optical power. The data "0" output optical power is found by measuring the optical power when the transmitter is driven by a logic "0" input. The extinction ratio is the ratio of the optical power at the "0" level compared to the optical power at the "1" level expressed as a percentage or in decibels.
13. The transmitter provides compliance with the need for Transmit_Disable commands from the FDDI SMT layer by providing an Output Optical Power level of < -45 dBm average in response to a logic "0" input. This specification applies to either 62.5/125 µm or 50/125 µm fiber cables.
14. This parameter complies with the FDDI PMD requirements for the trade-offs between center wavelength, spectral width, and rise/fall times shown in Figure 9.
15. This parameter complies with the optical pulse envelope from the FDDI PMD shown in Figure 10. The optical rise and fall times are measured from 10% to 90% when the transmitter is driven by the FDDI HALT Line State (12.5 MHz square-wave) input signal.
16. Duty Cycle Distortion contributed by the transmitter is measured at a 50% threshold using an IDLE Line State, 125 MBd (62.5 MHz square-wave), input signal. See Application Information - Transceiver Jitter Performance Section of this data sheet for further details.
17. Data Dependent Jitter contributed by the transmitter is specified with the FDDI test pattern described in FDDI PMD Annex A.5. See Application Information - Transceiver Jitter Performance Section of this data sheet for further details.
18. Random Jitter contributed by the transmitter is specified with an IDLE Line State, 125 MBd (62.5 MHz square-wave), input signal. See Application Information - Transceiver Jitter Performance Section of this data sheet for further details.
19. This specification is intended to indicate the performance of the receiver section of the transceiver when Input Optical Power signal characteristics are present per the following definitions. The Input Optical Power dynamic range from the minimum level (with a window time-width) to the maximum level is the range over which the receiver is guaranteed to provide output data with a Bit Error Ratio (BER) better than or equal to $2.5 \times 10^{-10}$.
    - At the Beginning of Life (BOL)
    - Over the specified operating temperature and voltage ranges
    - Input symbol pattern is the FDDI test pattern defined in FDDI PMD Annex A.5 with 4B/5B NRZI encoded data that contains a duty cycle base-line wander effect of 50 kHz. This sequence causes a near worst case condition for inter-symbol interference.
    - Receiver data window time-width is
      2.13 ns or greater and centered at
      mid-symbol. This worst case window time-width is the minimum allowed
      eye-opening presented to the FDDI PHY PM._Data indication input (PHY input) per the example in FDDI PMD Annex E. This minimum window time-width of 2.13 ns is based upon the worst case FDDI PMD Active Input Interface optical conditions for peak-to-peak DCD (1.0 ns), DDJ (1.2 ns) and RJ (0.76 ns) presented to the receiver.

    To test a receiver with the worst case FDDI PMD Active Input jitter condition requires exacting control over DCD, DDJ and RJ jitter components that is difficult to implement with production test equipment. The receiver can be equivalently tested to the worst case FDDI PMD input jitter conditions and meet the minimum output data window time-width of 2.13 ns. This is accomplished by using a nearly ideal input optical signal (no DCD, insignificant DDJ and RJ) and measuring for a wider window time-width of 4.6 ns. This is possible due to the cumulative effect of jitter components through their superposition (DCD and DDJ are directly additive and RJ components are rms additive). Specifically, when a nearly ideal input optical test signal is used and the maximum receiver peak-to-peak jitter contributions of DCD (0.4 ns), DDJ (1.0 ns), and RJ (2.14 ns) exist, the minimum window time-width becomes 8.0 ns -0.4 ns - 1.0 ns - 2.14 ns = 4.46 ns, or conservatively 4.6 ns. This wider window time-width of 4.6 ns guarantees the FDDI PMD Annex E minimum window time-width of 2.13 ns under worst case input jitter conditions to the Avago Technologies receiver.
    - Transmitter operating with an IDLE Line State pattern, 125 MBd (62.5 MHz square-wave), input signal to simulate any cross-talk present between the transmitter and receiver sections of the transceiver.
20. All conditions of Note 19 apply except that the measurement is made at the center of the symbol with no window time-width.
21. This value is measured during the transition from low to high levels of input optical power.
22. The Signal Detect output shall be asserted within 100 µs after a step increase of the Input Optical Power. The step will be from a low Input Optical Power, -45 dBm, into the range between greater than $P_A$, and
    -14 dBm. The BER of the receiver output will be $10^{-2}$ or better during the time, LS_Max (15 µs) after Signal Detect has been asserted. See Figure 12 for more information.
23. This value is measured during the transition from high to low levels of input optical power. The maximum value will occur when the input optical power is either -45 dBm average or when the input optical power yields a BER of $10^{-2}$ or larger, whichever power is higher.
24. Signal detect output shall be de-asserted within 350 µs after a step decrease in the Input Optical Power from a level which is the lower of; -31 dBm or $P_D$ + 4 dB ($P_D$ is the power level at which signal detect was de-asserted), to a power level of -45 dBm or less. This step decrease will have occurred in less than 8 ns. The receiver output will have a BER of $10^{-2}$ or better for a period of 12 µs or until signal detect is de-asserted. The input data stream is the Quiet Line State. Also, signal detect will be de-asserted within a maximum of 350 µs after the BER of the receiver output degrades above $10^{-2}$ for an input optical data stream that decays with a negative ramp function instead of a step function. See Figure 12 for more information.

chanhvinh.com

## Ordering Information

The 5803AQZ/5803ATQZ 1300 nm products are available for production orders through the Avago Technologies Component Field Sales Offices and Authorized Distributors world wide.

### -40 °C TO +85 °C

AFBR-5803AQZ/5803ATQZ

**Note:**
The "T" in the product numbers indicates a transceiver with a duplex ST connector receptacle.
Product numbers without a "T" indicate transceivers with a duplex SC connector receptacle.

For product information and a complete list of distributors, please go to our web site: **www.avagotech.com**

Avago, Avago Technologies, and the A logo are trademarks of Avago Technologies in the United States and other countries.
Data subject to change. Copyright © 2005-2008 Avago Technologies. All rights reserved.
AV02-0253EN - August 27, 2008