chanhvinh.com

AFBR-4526Z

Plastic optical fiber duplex connector for AFBR-5972Z

AVAGO TECHNOLOGIES

Data Sheet



Description

The AFBR-4526Z duplex connectors are designed for use with Avago Technologies' fast Ethernet transceiver AFBR-5972Z. The rugged design contains a latching mechanism for an increased retention force. The simple snap-together concept saves the user labor and tool cost.

The connectors are made of a rugged, flame retardant plastic which is good for industrial and other harsh environments. The AFBR-4526Z duplex connectors are for use with Plastic Optical Fiber (POF) only.

For termination of POF with AFBR-4526Z, we recommend to use the polishing kit AFBR-4594Z.

Features

- Suitable for 1mm diameter duplex plastic optical fiber (POF)
- Latching mechanism for increased retention force
- Easy installation of POF links with AFBR-5972Z

Applications

- Industrial data links for factory automation and plant control
- Intra-system links, board-to-board, rack-to-rack
- Medical instruments
- High voltage isolation

Absolute maximum ratings

Parameter	Min	Max	Unit	Note
Storage and operating temperature	-40	85	°C	1
Recommended operation temperature	-40	85	°C	1
Installation temperature	0	70	°C	1

Mechanical characteristics

Parameter	Min	Typ.	Max	Unit	Temp. [°C]	Note
Retention force, connector to transceiver; latching button pressed	15	20		N	25	2
Retention force, connector to transceiver; latching button NOT pressed	8	24		N	25 -40 to +85	2,3
Tensile force, connector to cable		90		N		2
Insertion force, connector to transceiver		20		N		2

Notes:

1. Storage and operating temperatures refer to the ranges over which the connectors can be used when not subjected to mechanical stress. Installation temperature refers to the ranges over which connectors may be installed onto the fiber and over which connectors can be connected and disconnected from the trnasceiver.
2. Typical data are at 25°C.
3. Usually, the button of the latching mechanism shall be pressed when disconnecting the fiber. If the connector is pulled out of the transceiver while the lever is not pressed, the latching mechanism will degrade significantly after the first cycle.

chanhvinh.com

Termination Guide for AFBR-4526Z

Step-by-Step Plastic Cable Connectoring Instructions

The following step-by-step guide describes how to terminate plastic fiber optic cable. It is ideal for both field and factory installations. Connectors can be easily installed on cable ends with standard tools such as wire strippers and cutters.

Finishing the cable is accomplished with the Avago Technologies AFBR-4594Z Polishing Kit, consisting of a three hole polishing fixture, 600 grit abrasive paper and 3 µm pink lapping film. The connector can be used immediately after polishing.

The following materials are needed for plastic fiber termination:

1. Plastic optical fiber cable (Example: HFBR-EUD500Z)
2. Wire cutters or scissors
3. 16 gauge wire stripper (Example: Ideal Stripmaster type 45-092)
4. AFBR-4594Z polishing kit
5. Duplex connectors AFBR-4526Z

Step 1: Stripping the Fiber

The zip cord structure of the duplex cable permits easy separation of the channels. The channels should be separated a minimum of 100 mm (4 in) to a maximum of 150 mm (6 in) back from the ends to permit connectoring, polishing and cable end flexibility.

After cutting the cable to the desired length, strip off approximately 7 mm (0.3 in) of the outer jacket with the 16 gauge wire strippers.

The separated duplex cable should be stripped to roughly equal lengths on each cable end.



Step 2: Putting on the Connector

Place the connector on each end of the fiber, and slide the connector down until the fiber jacket stops it. The fiber should protrude no less than 1.5 mm (0.06 in) from the end of the connector.

Manually press connectors together. The connectors are secured when top halves latch into the ferrule halves.

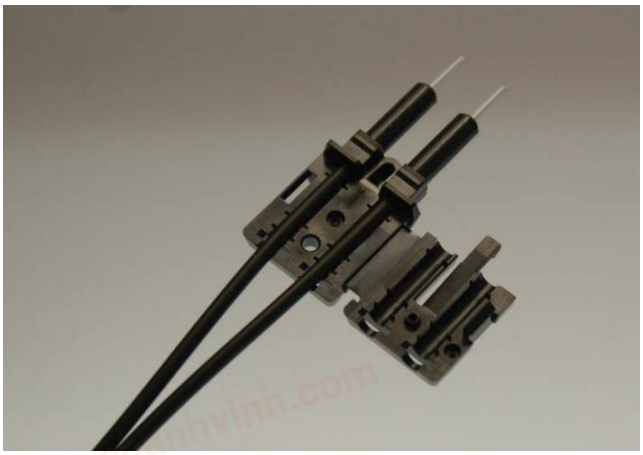

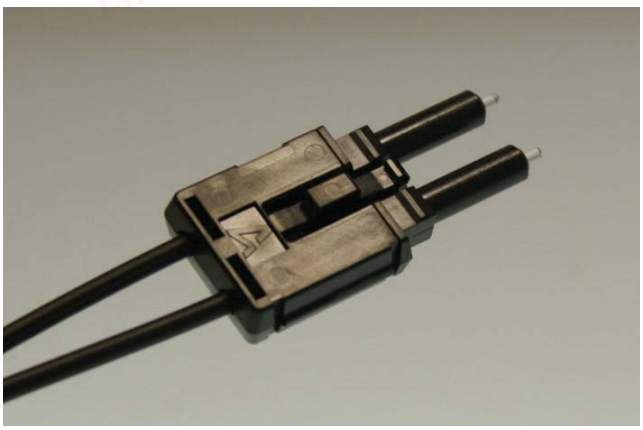

During insertion of the fiber into the connector, make sure that the orientation of the connector is correct (see next figure). So you make sure that the optical channels are connected correctly (Tx1 --> Rx2; Tx2 --> Rx1).

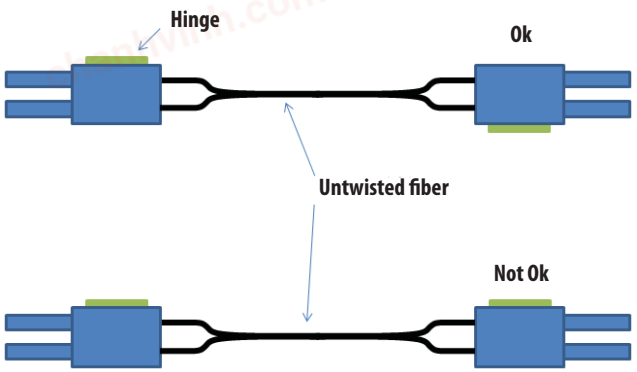

chanhvinh.com

Step 3: Trimming and Polishing

Any fiber in excess of 1.5 mm (0.06 in) protruding from the connector end should be cut off with wire cutters or scissors.

Insert the connector fully into the polishing fixture with the trimmed fiber protruding from the bottom of the fixture. This plastic polishing fixture can be used to polish one or two simplex connectors or one duplex connector.

Note: The four dots on the bottom of the polishing fixture are wear indicators. Replace the polishing fixture when any dot is no longer visible.

Press the polishing tool down on the 600 grit abrasive paper. Polish the fiber using a figure eight pattern until the connector is flush with the bottom of the polishing fixture. Wipe the connector and fixture with a clean cloth or tissue.



Polishing kit AFBR-4594Z

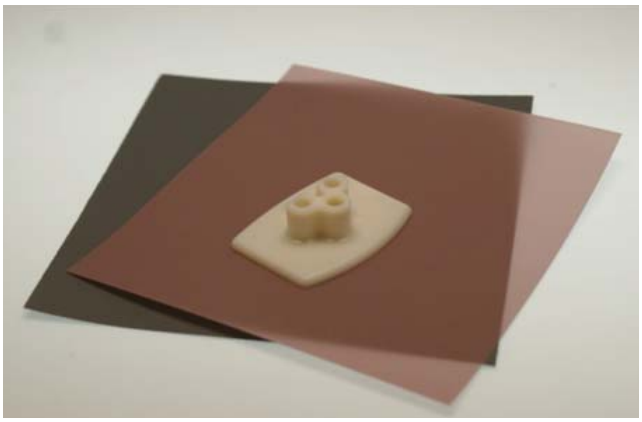

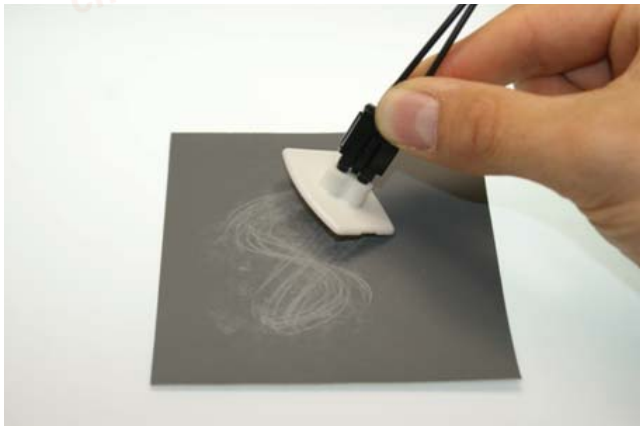

Step 4: Finishing

Place the flush connector and polishing fixture on the dull side of the 3 µm pink lapping film and continue to polish the fiber in the same figure eight pattern for approximately 25 strokes. The fiber end should be flat, smooth and clean.



Note: Use of the pink lapping film fine polishing step results in up to 0,5 dB improvement in coupling performance of either a transmitter-receiver link or a bulkhead/splice over a 600 grit polish alone. This fine polish is comparable to the Avago Technologies factory polish. The fine polishing step may be omitted for short link lengths.

chanhvinh.com

Package Dimensions

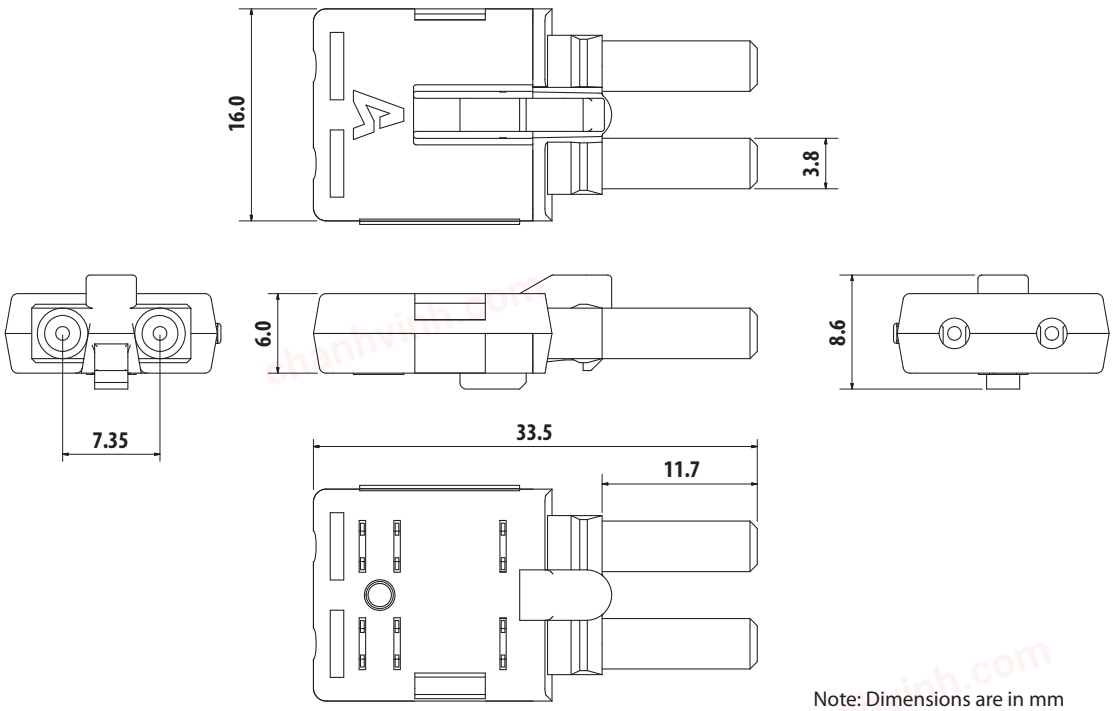

Note: Dimensions are in mm

Ordering Guide for POF Cable

HFBR- R S D 0 0 X Z

Cable Code
R = Standard Attenuation POF

Connector Code
S = With AFBR-4526Z Duplex Connectors

Channel Code
D = Duplex Zipcord Cable

Length Code
(measured from connector tip to tip of connector)
Maximum 500 meters (not in 1meter increments)
X = 1 meters or 2 meters or 5 meters only.
e.g 001 = 1 meters

RoHS Compliant

Note: For other cable lengths please contact Avago representative

For Example:

HFBR-RSD002Z is a Standard attenuation, AFBR-4526Z Duplex connectors, 2 meters cable.

Cable Length Tolerances

The plastic cable length tolerances are: Max. +10% and Min. 0%

For product information and a complete list of distributors, please go to our web site: **www.avagotech.com**

Avago, Avago Technologies, and the A logo are trademarks of Avago Technologies in the United States and other countries.
Data subject to change. Copyright © 2005-2011 Avago Technologies. All rights reserved.
AV02-2926EN - December 6, 2011