chanhvinh.com

BROADCOM®

Data Sheet

AFBR-3950xxRZ

High Voltage Galvanic Insulation Link for DC to 50 MBaud

Certified to IEC 60747-5-5



Description

The Broadcom® AFBR-3950xxRZ is a high-voltage galvanic insulation link for DC to 50 MBaud. The AFBR-3950xxRZ consists of an optical transmitter and receiver operating at 650-nm wavelength. Pin- to-pin distance of approximately 25 mm to 101 mm provides transient voltage suppression in the range of 15 kV to 50 kV.

Applications

- Drives/inverters
- Galvanic insulation on one single PCB
- Medium voltage power distributions
- Regulated distribution transformers
- Smart grid on-board Insulations

Features

- Data transmission at signal rates of DC to 50 MBaud
- DC coupled transmitter and receiver with CMOS/TTL input-output for easy designs: no data encoding or digitizing circuitry required
- High noise immunity through receiver IC with integrated photodiode
- RoHS compliant
- Transient voltage suppression in the range of 15 kV up to 50 kV according IEC 60644
- Laser class 1 according to IEC-60825
- Certified according to IEC-60747-5-5
- Housing material UL-V0 with CTI 600
- Optional 3.3V or 5V power supply

Ordering Information

Part Number	Length	mm	Voltage Suppression
AFBR-395025RZ	1 inch	25	15 kV
AFBR-395050RZ	2 inch	50.4	27 kV
AFBR-395075RZ	3 inch	75.8	40 kV
AFBR-395000RZ	4 inch	101.2	50 kV

chanhvinh.com

AFBR-3950xxRZ DC to 50 MBaud Data Link

Absolute Maximum Ratings

Parameter		Symbol	Min.	Max.	Units
Signaling Rate		f_s	DC	50	MBd
Storage and Operating Temperature		$T_{S,O}$	–40	+85	°C
Receiver Supply Voltage		V_{CCRx}	–0.5	+5.5	V
Receiver Supply Current		I_{CCRx}	—	30	mA
Receiver Output Current		I_{OAV}	—	10	mA
Transmitter Supply Voltage		V_{CCTx}	–0.5	+5.5	V
Transmitter Supply Current		I_{CCTx}	—	31	mA
Lead Soldering Cycle[a, b]	Temp	T_{SOL}	—	+260	°C
	Time		—	10	seconds

a. 1.6 mm below seating plane; wave soldering only.

b. MSL class 3.

ATTENTION: Stresses above those listed here may cause permanent damage to the device. Exposure to absolute maximum rating conditions for extended periods may aff ect device reliability.

Recommended Operating Conditions

Parameter	Symbol	Min.	Max.	Units
Ambient Temperature	T_A	–40	85	°C
Receiver Power Supply Voltage[a]	V_{CCRx}	3.135 4.75	3.465 5.25	V
Transmitter Supply Voltage	V_{CCTx}	3.135 4.75	3.465 5.25	V
Signaling Rate	f_S	DC	50	MBd

a. < 100mVp-p noise.

All the data in this specification refers to the operating conditions above and over lifetime unless otherwise stated.

Insulation Characteristics

Parameter	Symbol	Min.	Max.	Units
Apparent charge at Sample Test stage and Type Test stage after subgroup 1 (method a)[a]	q_{pd}	—	5	pC
Apparent charge at Routine Test stage and Type Test stage, Preconditioning (method b) [b]	q_{pd}	—	5	pC

chanhvinh.com

Parameter	Symbol	Min.	Max.	Units
Maximum Transient Voltage, peak [c]	V_{IOTM_1inch}	15	—	kV
	V_{IOTM_2inch}	27	—	
	V_{IOTM_3inch}	40	—	
	V_{IOTM_4inch}	50	—	
Maximum Transient Voltage, effective[c]	V_{ISO_1inch}	10.5	—	kV
	V_{ISO_2inch}	19	—	
	V_{ISO_3inch}	28.1	—	
	V_{ISO_4inch}	35.2	—	
Maximum Working Voltage, peak[d]	V_{IORM_1inch}	4.25	—	kV
	V_{IORM_2inch}	8.5	—	
	V_{IORM_3inch}	12.75	—	
	V_{IORM_4inch}	17.00	—	
Maximum Working Voltage, effective[d]	V_{IOWM_1inch}	3	—	kV
	V_{IOWM_2inch}	6	—	
	V_{IOWM_3inch}	9	—	
	V_{IOWM_4inch}	12	—	
Insulation Resistance @ $T_{amb,max}$, min.100°C	R_{IO}	10^{11}	—	Ω
Insulation Resistance @ T_S	R_{IO}	10^{9}	—	Ω
Creepage Distance	1inch	25	—	mm
	2inch	50.4	—	
	3inch	75.8	—	
	4inch	101.2	—	
Clearance Distance	1inch	25	—	mm
	2inch	50.4	—	
	3inch	75.8	—	
	4inch	101.2	—	
Surge Isolation Voltage	V_{IOSM}	12	—	kV
Comparative Tracking Index	CTI	600	—	
Pollution degree[e]		2	—	
Climatic category[f]		40/085/21	—	
Maximum ambient safety temperature	T_S	110	—	°C
Maximum input current	I_{SI}	60	—	mA
Maximum output current	I_{SO}	30	—	mA
Maximum input power dissipation	P_{SI}	330	—	mW
Maximum output power dissipation	P_{SO}	165	—	mW

a. $V_{pd(m)} = 1.6 \times V_{IORM}$ (= 6.8 kV for 1inch, =13.6 kV for 2inch, =20.4 kV for 3inch, =27.2 kV for 4inch), $V_{ini,a} = V_{IOTM}$, $t_{ini,a}$ = 60s ; t_m = 10s.

b. $V_{pd(m)} = 1.875 \times V_{IORM}$ (= 8 kV for 1inch, =16 kV for 2inch, =24 kV for 3inch, =32 kV for 4inch), $V_{ini,b} = V_{IOTM}$, $t_{ini,b}$ = 1s ; t_m = 1s

c. Altitude up to 2000m above sea level.

d. Pollution degree 2; please note that inhomogeneous fi eld conditions may lead to partial discharge through air for these voltages.

e. According IEC-60064-1.

f. According IEC-60068-1.

chanhvinh.com

Electrical Input Characteristics

Parameter	Symbol	Min.	Typ.	Max.	Units
Input Voltage Low	V_{IL}	—	—	0.8	V
Input Voltage High [a]	V_{IH}	2	—	V_{CCTx}	V
Input Capacitance	C_{IN}	—	—	7	pF
Input Resistance	R_{IN}	10	—	—	kΩ

a. Duty Cycle shall be 50% at 1.5V

Electrical Output Signal Characteristics

Parameter	Symbol	Min.	Typ.	Max.	Units
High Level Output Voltage	V_{OH}	2.5	V_{CCRX}	V_{CCRX} +0.3	V
Low Level Output Voltage	V_{OL}	—	—	0.4	V
Output Risetime (10–90%)[a]	t_r	—	—	5	ns
Output Falltime (90–10%)[a]	t_f	—	—	5	ns
Power Supply Noise Immunity	PSNI	0.1	0.4	—	Vpp
Vcc level to deactivate POR[b]	V_{POR_DEACT}	—	2.8	—	V
Vcc level to activate POR[b]	V_{POR_ACT}	—	2.6	—	V
POR deactivate delay time[b]	$t_{POR\text{-}DEACT_DEL}$	—	10	—	ms

a. C_L = 15p, R_L = 50 kΩ F.

b. A power-on reset (POR) is both implemented at the transmitter and the receiver. It is active below V_{POR_DEACT}. Once V_{POR_DEACT} is reached, the POR remains active for $t_{POR\text{-}DEACT_DEL}$. During power-down, POR starts at V_{POR_ACT}. During active POR, the output signal is low. V_{POR_DEACT} and V_{POR_ACT} both apply to Tx and Rx, $t_{POR\text{-}DEACT_DEL\ POR}$ applies only for the Rx. The delay time of the Tx is typically ~10 µs.

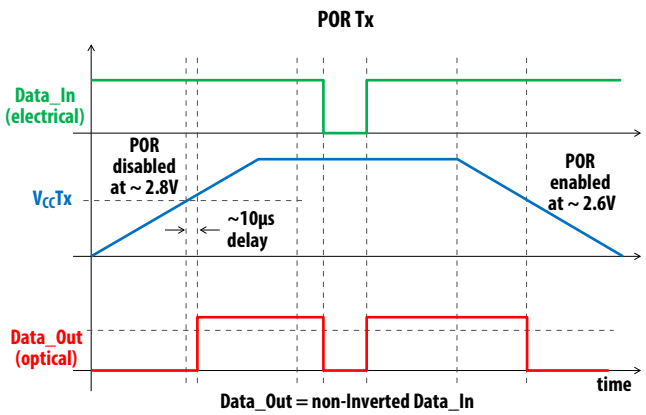

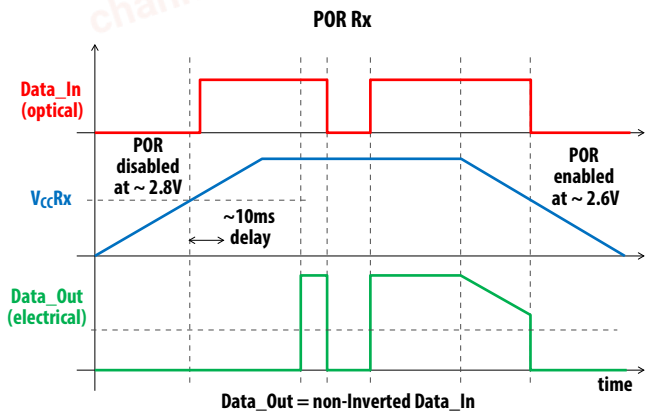

chanhvinh.com

Specified Link Performance

T_A = –40°C to +85°C, DC to 5 MBaud, unless otherwise noted.

Parameter	Symbol	Min.	Typ.	Max.	Units	Condition
Signaling Rate	f_S	DC	—	50	MBd	NRZ
Pulse Width Distortion[a]	PWD	–5	—	+8	ns	50 MBaud
Propagation Delay[b]	t_D	—	—	50	ns	50 MBaud
Skew[c]	t_S	—	—	5	ns	50 MBaud
Supply Current Tx[d]	I_{CCTx}	—	20	31	mA	50 Mbaud
Supply Current Rx[d]	I_{CCRx}	—	17	30	mA	50 MBaud

a. Provided the following characteristics of the electrical input: a) no PWD at 1.5V input level, and b) dU/dt between 1V and 2V is less than 1 V/ns.

b. Determined from 1.5V of the rising edge of Data_In to 50% of the rising edge of Data_Out

c. The t_D variation between multiple devices measured for same input conditions and same external signal delay.

d. Depends on Supply Voltage and Signal Rate.

Block Diagram – AFBR-3950xxRZ

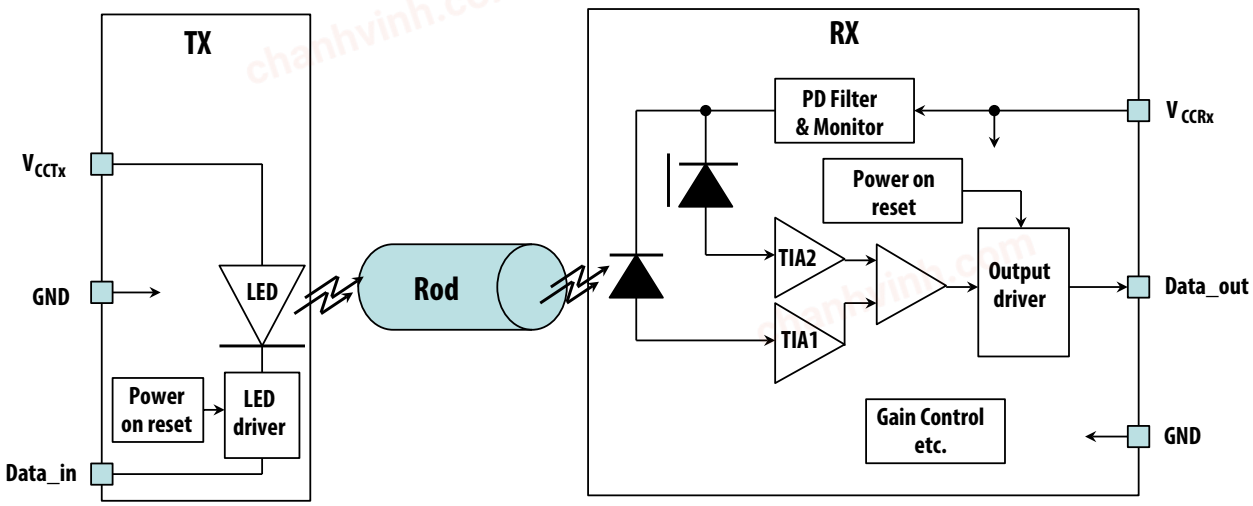

A low Input signal at Data_in results in a low output signal at Data_out (non-inverted Tx to non-inverted Rx).

POR remains active during VCC power up, typically until 10 µs for Tx and 10ms for Rx after 2.8V is reached. For both Tx and Rx, Data_out is low while POR active.

Recommended chemicals for Cleaning/Degreasing

- Alcohols: methyl, isopropyl, isobutyl.
- Aliphatics: hexane, heptanes
- Other: soap solution, naphtha

Do not use partially halogenated hydrocarbons, such as 1.1.1 trichloroethane; or ketones, such as MEK, acetone, chloroform, ethyl acetate, methylene dichloride, phenol, methylene chloride, or N-methylpyrolldone. Also, Broadcom does not recommend the use of cleaners that use halogenated hydrocarbons because of their potential environmental harm.

chanhvinh.com

Recommended Drive Circuit (a) – Top View

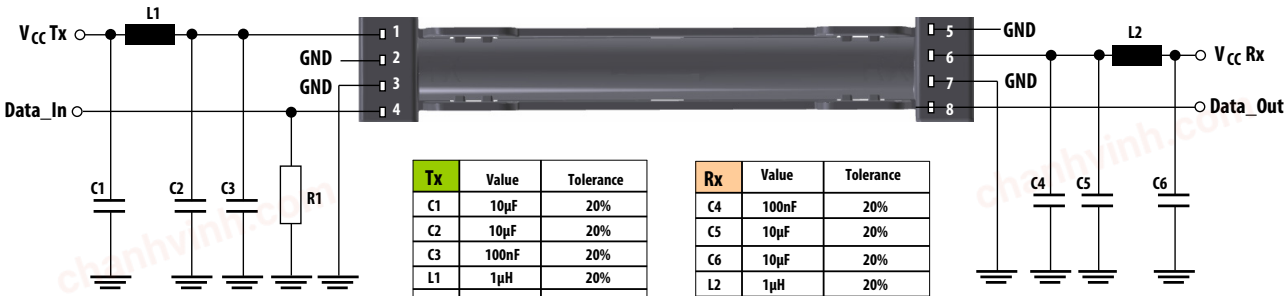

Tx	Value	Tolerance
C1	10µF	20%
C2	10µF	20%
C3	100nF	20%
L1	1µH	20%
R1	4.7kΩ	5%

Rx	Value	Tolerance
C4	100nF	20%
C5	10µF	20%
C6	10µF	20%
L2	1µH	20%

Pin Description

Pin Number	Transmitter
1	VCCTx
2	No function[a]
3	GND
4	Data_in

Pin Number	Receiver
5	No function[a]
6	VCCRx
7	GND
8	Data_out

a. Connect this pin to signal ground.

Pinning Schematic

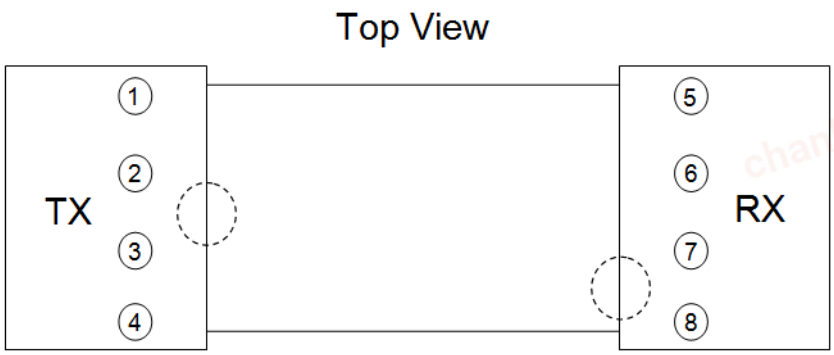

chanhvinh.com

Footprint (Top View)

Dimensions in mm.

AFBR-395025RZ

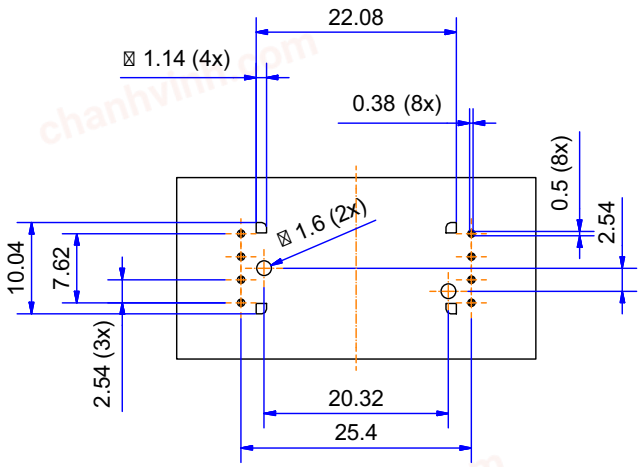

AFBR-395050RZ

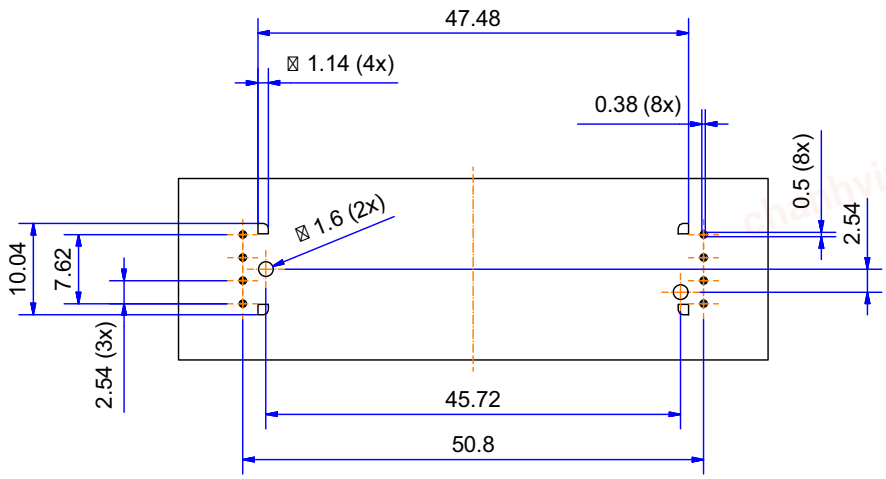

chanhvinh.com

Footprint (Top View, Continued)

Dimensions in mm.

AFBR-395075RZ

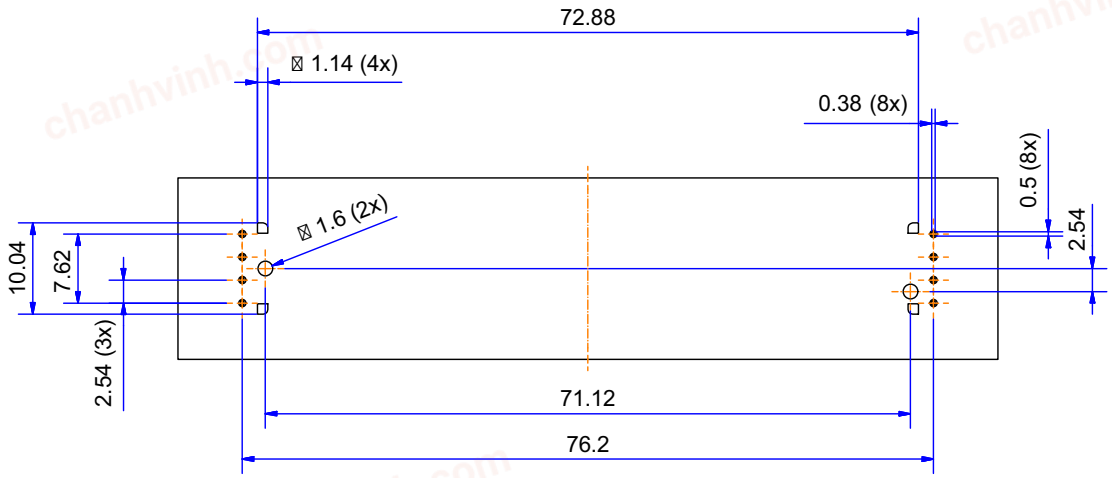

AFBR-395000RZ

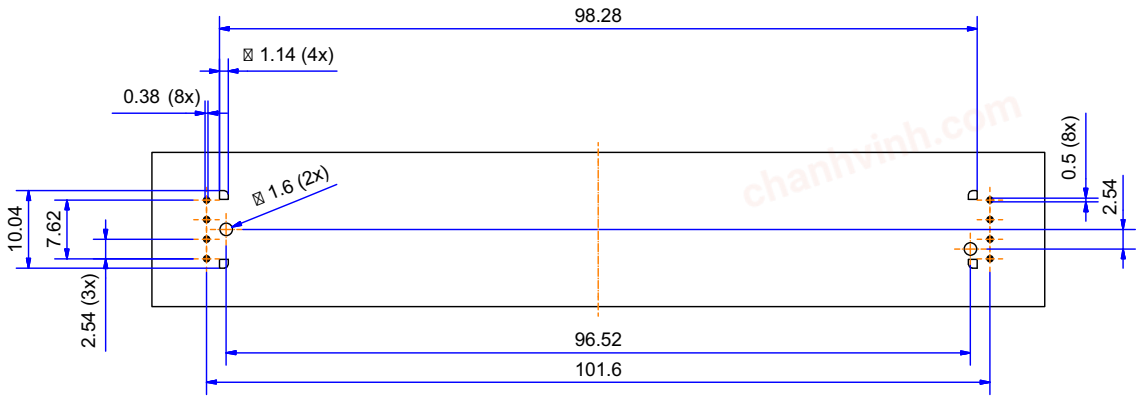

chanhvinh.com

Mechanical Dimensions

Dimensions in mm.

AFBR-395025RZ

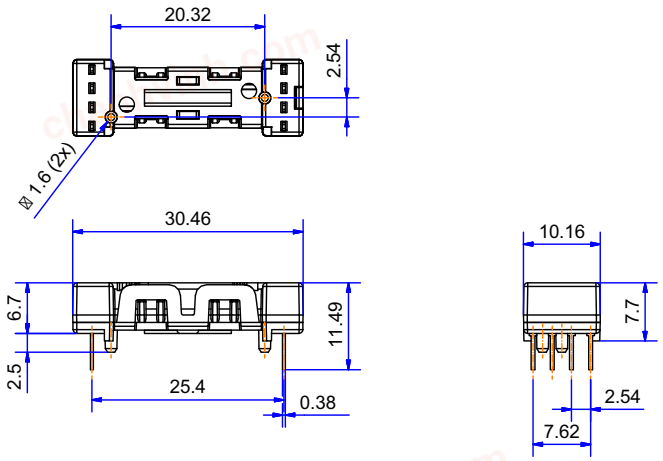

AFBR-395050RZ

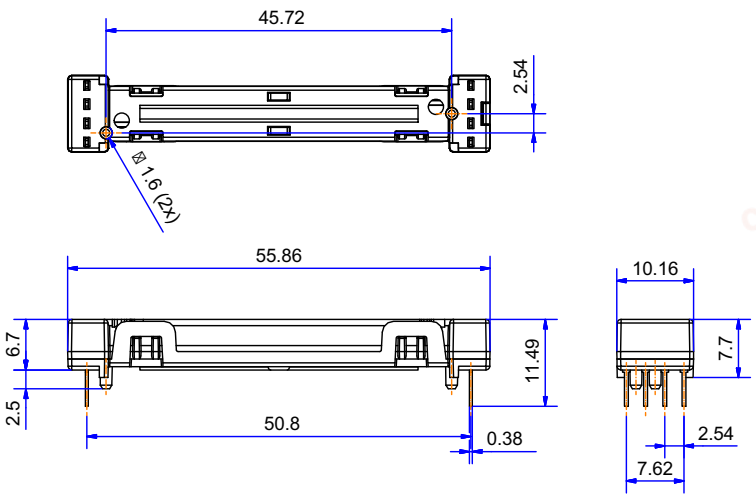

chanhvinh.com

Mechanical Dimensions (Continued)

Dimensions in mm.

AFBR-395075RZ

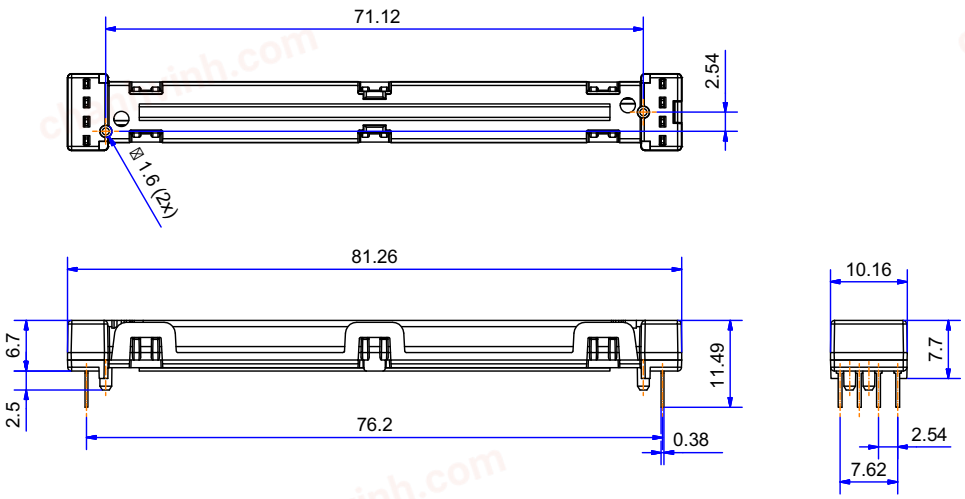

AFBR-395000RZ

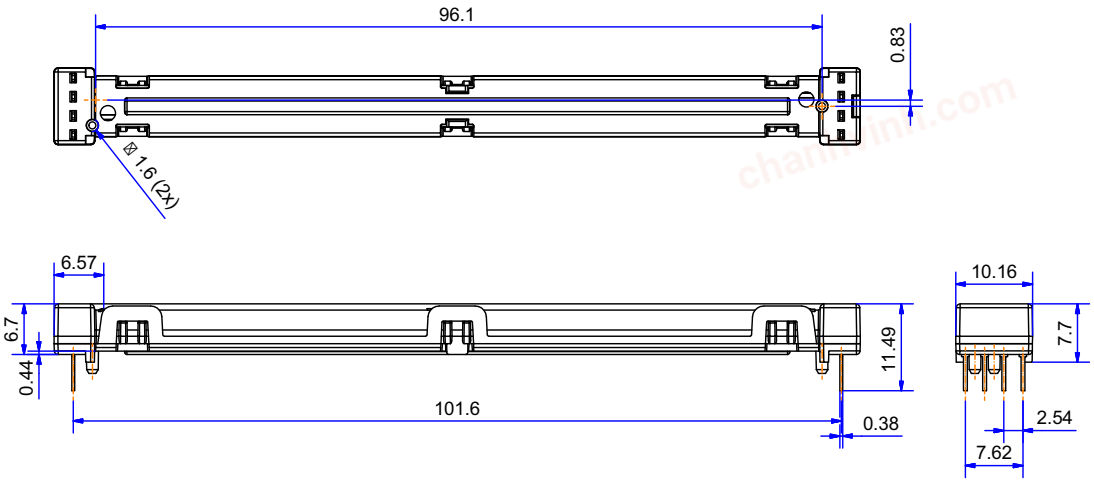

CAUTION! Do not bend AFBR-3950xxRZ devices under any circumstances.

chanhvinh.com

Broadcom, the pulse logo, Connecting everything, Avago Technologies, Avago, and the A logo are among the trademarks of Broadcom and/or its affiliates in the United States, certain other countries, and/or the EU.

Copyright © 2015–2018 Broadcom. All Rights Reserved.

The term “Broadcom” refers to Broadcom Limited and/or its subsidiaries. For more information, please visit www.broadcom.com.

Broadcom reserves the right to make changes without further notice to any products or data herein to improve reliability, function, or design. Information furnished by Broadcom is believed to be accurate and reliable. However, Broadcom does not assume any liability arising out of the application or use of this information, nor the application or use of any product or circuit described herein, neither does it convey any license under its patent rights nor the rights of others.

