chanhvinh.com

BROADCOM®

Data Sheet

AEPD-C0D0-00000

SMT PIN Photodiode

Description

The Broadcom® AEPD series is a silicon PIN photodiode with unique package design which enables it to be surface mountable while producing a narrow angle of sensitivity unlike any other. The primary optic focuses light into the photodiode die, resulting in higher light sensitivity and cutting off stray lights from the side.

The product can be operated under a wide range of environmental conditions, making it ideal for various industrial and consumer applications.

Features

- Silicon PIN Photodiode
- Surface-mountable package
- Narrow angle of sensitivity
- Black epoxy package with sensitivity of >845 nm
- Suitable for outdoor application
- IR emitter in similar package: AERD-N4xx

Applications

- Industrial automation
- White goods

CAUTION! This LED is ESD sensitive. Please observe appropriate precautions during handling and processing. Refer to application note AN-1142 for additional details.

The product must be kept in a moisture barrier bag at <5% relative humidity (RH) when not in use because prolonged exposure to the environment might cause the leads to tarnish or rust, which might cause difficulties in soldering.

chanhvinh.com

Figure 1: Package Drawing

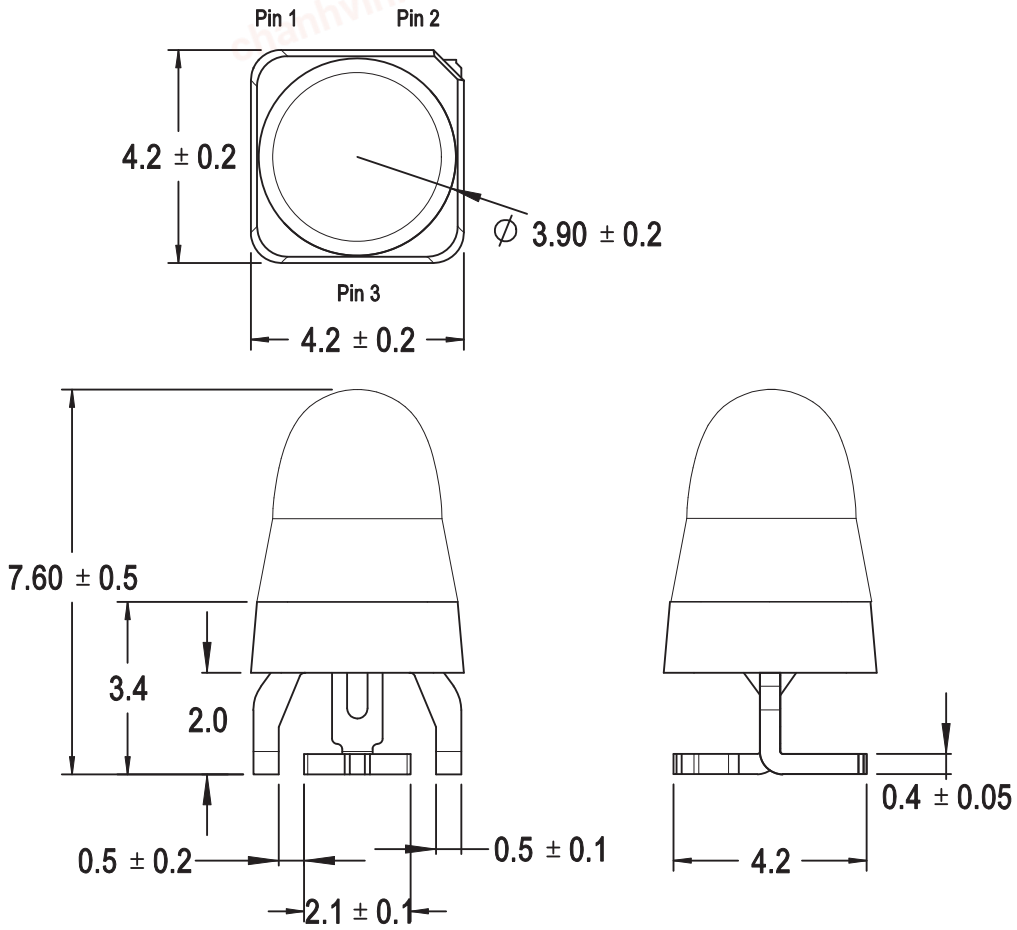

Lead Configuration	
Pin 1	Cathode
Pin 2	Anode
Pin 3	Cathode

NOTE:

1. All dimensions in millimeters (mm).
2. Tolerance is ±0.50 mm unless otherwise specified.

chanhvinh.com

Device Selection Guide (T_J = 25°C)

Part Number	Reverse Light Current, I_{ra} (µA)			Test Conditions
	Min.	Typ.	Max.	
AEPD-C0D0-00000	20	30	—	E_e = 1 mW/cm^2, λ = 940 nm, V_R = 5V

Absolute Maximum Ratings

Parameters	Rating	Unit
Reverse Voltage, V_R	20	V
Power Dissipation, P¬$_D$	150	mW
Operating Temperature Range	–40 to +85	°C
Storage Temperature Range	–40 to +100	°C

Optical and Electrical Characteristics (T_J = 25°C)

Parameters	Symbol	Min.	Typ.	Max.	Units	Test Condition
Wavelength of Peak Sensitivity	$\lambda_{S\ max}$	—	960	—	nm	—
Spectral Range of Sensitivity	$\lambda_{0.1}$	—	845 - 1100	—	nm	—
Angle of Sensitivity	φ	—	±9	—	°	—
Reverse Dark Current	I_{ro}	—	—	10	nA	V_R = 10V, E_e = 0 mW/cm^2
Open Circuit Voltage	V_{OC}	—	430	—	mV	E_e = 1 mW/cm^2, λ = 940 nm
Short Circuit Current	I_{SC}	—	30	—	µA	E_e = 1 mW/cm^2, λ = 940 nm
Temperature Coefficient of V_{OC}	TC_{VOC}	—	–2.60	—	mV/°C	E_e = 1 mW/cm^2, λ = 940 nm
Temperature Coefficient of I_{SC}	TC_{ISC}	—	–0.12	—	%/°C	E_e = 1 mW/cm^2, λ = 940 nm
Forward Voltage	V_F	—	0.86	—	V	I_F = 10 mA
Diode Capacitance	C_0	—	5	—	pF	V_R = 0V, E_e = 0 mW/cm^2, f = 1 MHz

chanhvinh.com

Figure 2: Relative Sensitivity vs. Wavelength

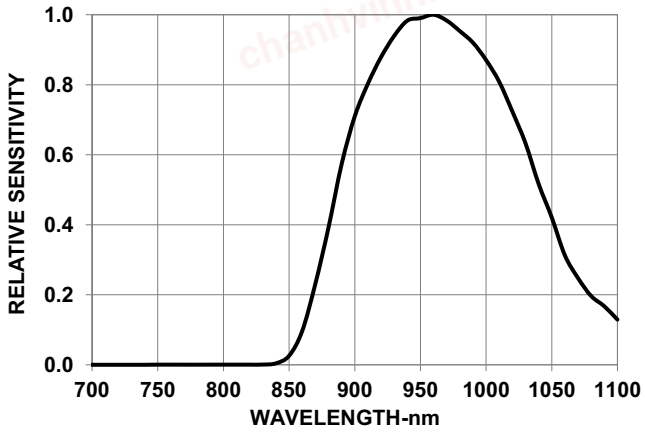

Figure 3: Relative Sensitivity vs. Angular Displacement Angle

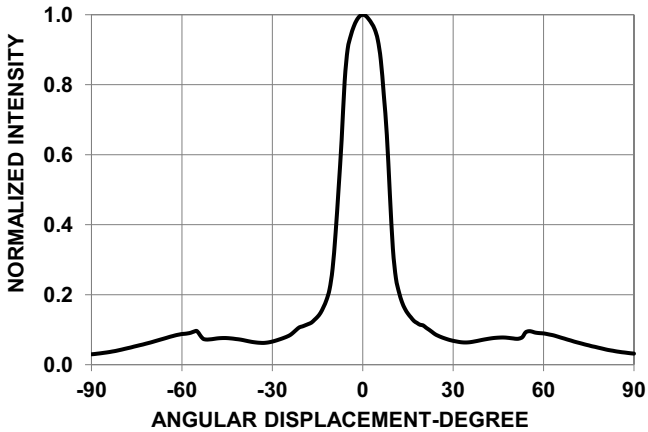

Figure 4: Reverse Light Current vs. Irradiance

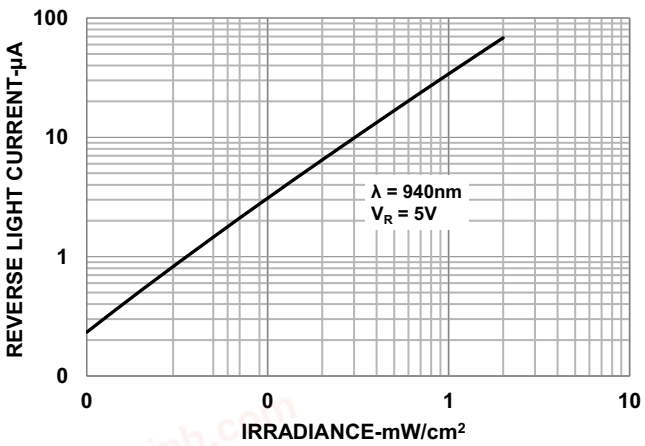

Figure 5: Reverse Dark Current vs. Reverse Voltage

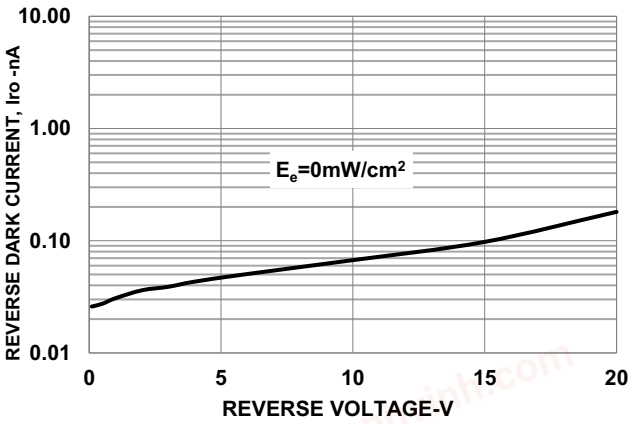

Figure 6: Reverse Dark Current vs. Ambient Temperature

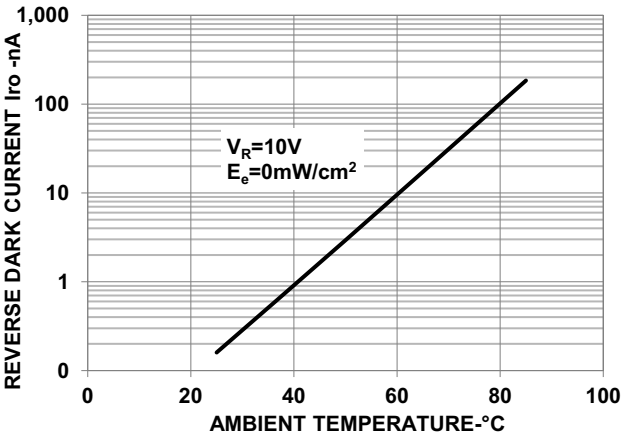

Figure 7: Relative Reverse Light Current vs. Ambient Temperature

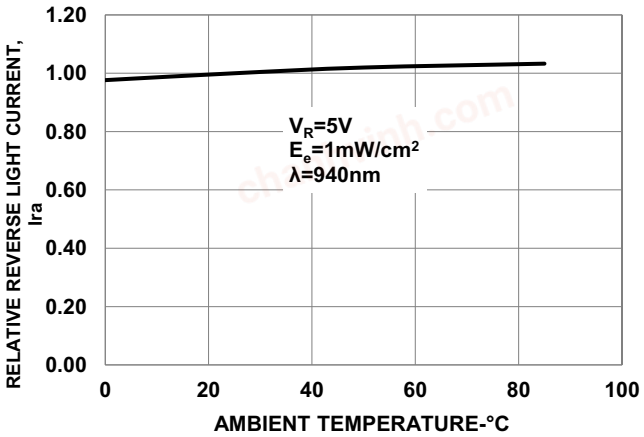

chanhvinh.com

Figure 8: Diode Capacitance vs. Reverse Voltage

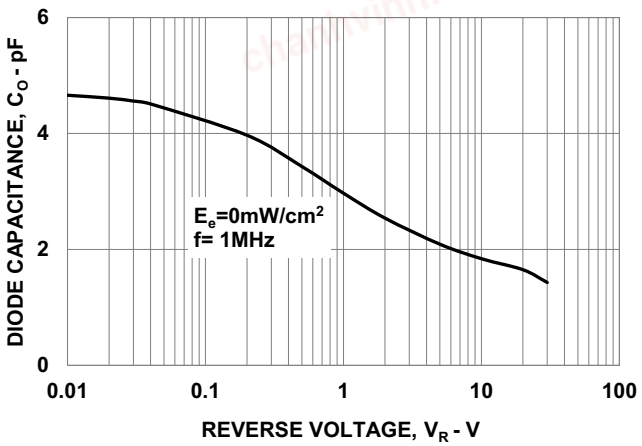

Figure 9: Recommended Soldering Land Pattern

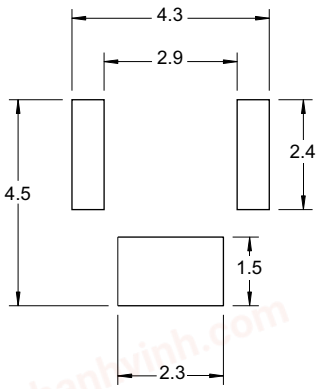

NOTE:

1. All dimensions are in millimeters (mm).
2. Recommended stencil thickness = minimum 0.15 mm (6 mil).

chanhvinh.com

Precautionary Notes

Soldering

- Do not perform reflow soldering more than twice. Observe necessary precautions of handling moisture-sensitive devices as stated in the following section.
- Do not apply any pressure or force on the package during reflow and after reflow when the package is still hot.
- Use reflow soldering to solder the package. Use hand soldering only for rework if unavoidable, but it must be strictly controlled to following conditions:
  - Soldering iron tip temperature = 315°C maximum.
  - Soldering duration = 3 seconds maximum.
  - Number of cycles = 1 only.
  - Power of soldering iron = 50W maximum.
- Do not touch the package body with the soldering iron except for the soldering terminals, as it may cause damage to the package.
- Confirm beforehand whether the functionality and performance of the package is affected by soldering with hand soldering.

Figure 10: Recommended Lead-Free Reflow Soldering Profile

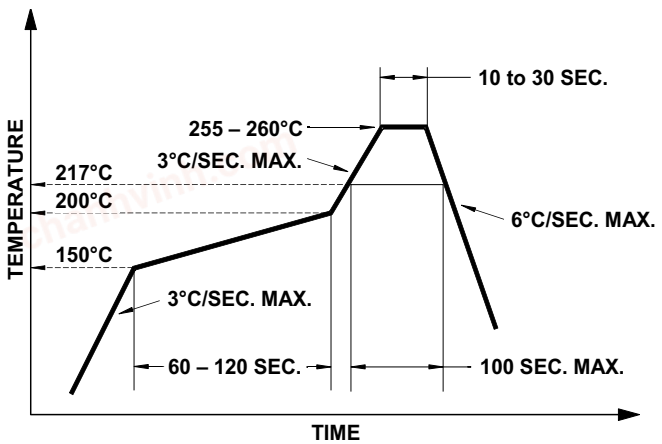

Handling Precautions

For automated pick-and-place, Broadcom has tested the following nozzle size to work well with this package. However, due to the possibility of variations in other parameters, such as pick-and-place machine maker/model, and other settings of the machine, verify that the selected nozzle performs as per requirements.

Figure 11: Recommended Nozzle Dimension

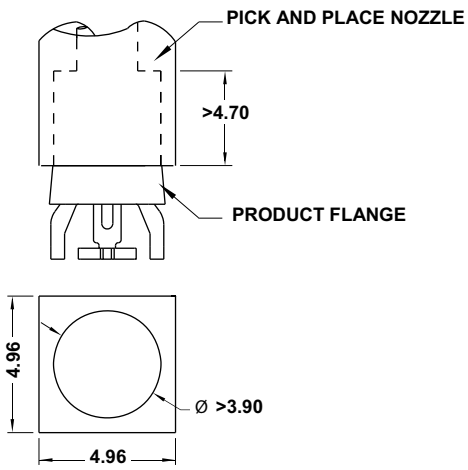

chanhvinh.com

Handling of Moisture-Sensitive Devices

This product has a Moisture Sensitive Level 3 rating per JEDEC J-STD-020. Refer to Broadcom Application Note AN5305, *Handling of Moisture Sensitive Surface Mount Devices*, for additional details and a review of proper handling procedures.

Before use:

- An unopened moisture barrier bag (MBB) can be stored at <40°C/90% RH for 12 months. If the actual shelf life has exceeded 12 months and the humidity indicator card (HIC) indicates that baking is not required, it is safe to reflow the packages per the original MSL rating.
- Do not open the MBB prior to assembly (for example, for IQC). If unavoidable, the MBB must be properly resealed with fresh desiccant and HIC. The exposed duration must be taken in as floor life.

Control after opening the MBB:

- Read the HIC immediately upon opening of MBB.
- Keep the packages at <30°/60% RH at all times, and complete all high temperature-related processes, including soldering, curing or rework within 168 hours.

Control for unfinished reel:

Store unused products in a sealed MBB with desiccant or a desiccator at <5% RH.

Control of assembled boards:

If the PCB soldered with the products is to be subjected to other high-temperature processes, store the PCB in a sealed MBB with desiccant or desiccator at <5% RH to ensure that all packages have not exceeded their floor life of 168 hours.

Baking is required if the following conditions exist:

- The HIC indicator indicates a change in color for 10% and 5%, as stated on the HIC.
- The products are exposed to conditions of >30°C/60% RH at any time.
- The product's floor life exceeded 168 hours.

The recommended baking condition is: 60°C ±5ºC for 20 hours.

Baking can only be done once.

Storage:

The soldering terminals of the product are silver plated. If the products are exposed in an ambient environment for too long, the silver plating might be oxidized, thus affecting its solderability performance. Therefore, keep unused products in a sealed MBB with desiccant or in a desiccator at <5% RH.

Application Precautions

- If the product is intended to be used in a harsh or an outdoor environment, protect the products against damage caused by rain water, water, dust, oil, corrosive gases, external mechanical stresses, and so on.

chanhvinh.com

Disclaimer

Broadcom's products and software are not specifically designed, manufactured, or authorized for sale as parts, components, or assemblies for the planning, construction, maintenance, or direct operation of a nuclear facility or for use in medical devices or applications. The customer is solely responsible, and waives all rights to make claims against Broadcom or its suppliers, for all loss, damage, expense, or liability in connection with such use.

Copyright © 2022 Broadcom. All Rights Reserved. The term "Broadcom" refers to Broadcom Inc. and/or its subsidiaries. For more information, go to www.broadcom.com. All trademarks, trade names, service marks, and logos referenced herein belong to their respective companies.

Broadcom reserves the right to make changes without further notice to any products or data herein to improve reliability, function, or design. Information furnished by Broadcom is believed to be accurate and reliable. However, Broadcom does not assume any liability arising out of the application or use of this information, nor the application or use of any product or circuit described herein, neither does it convey any license under its patent rights nor the rights of others.

BROADCOM®

Lead (Pb) Free
RoHS Compliant