chanhvinh.com

AEAT-6010/6012 Magnetic Encoder

10 or 12 bit Angular Detection Device

AVAGO TECHNOLOGIES

Data Sheet

Description

Avago Technologies' AEAT-60xx series of magnetic encoders provides an integrated solution for angular detection. With ease of use in mind, these magnetic encoders are ideal for angular detection within 360°. Based on magnetic technologies, the device is non-contact and ensures reliable operations. It is able to provide absolute angle detection upon power-up, with a resolution of 0.0879°(12 bits version) or 0.35°(10bits version), which is equivalent to 4096 and 1024 positions per revolution respectively. The positional data is provided in serial bit stream. There is no upper speed limit; the only restriction is that there will be fewer samples per revolution as the speed increases.

Exploded View

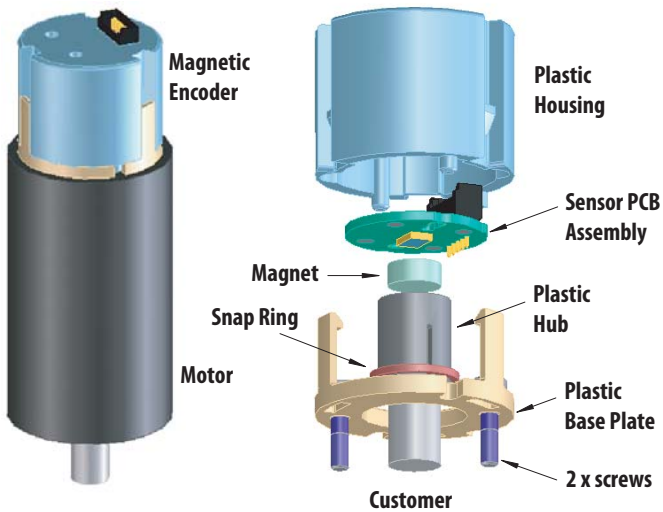

Features

- 10 or 12 bits resolution
- Contactless sensing technologies
- Wide temperature range from -40° to 125°C
- Absolute angular position detection
- Synchronous serial interface (SSI) output for absolute position data (binary format)
- Code monotony error = ± 1 LSB
- 5V supply
- Easy Assembly, No Signal Adjustment required
- RoHS compliant

Applications

- Flow meter
- Angular detection
- Knob control
- Rotary encoder

Note: "This product is not specifically designed or manufactured for use in any specific device. Customers are solely responsible for determining the suitability of this product for its intended application and solely liable for all loss, damage, expense or liability in connection with such use."

chanhvinh.com

Device Selection Guide [1]

Part Number	Resolution (bit)	Operating Temperature (°C)	Output Communication	DC Supply Voltage (V), V_{DD}
AEAT-6012-A06	12	-40 to +125	Serial	+5.0
AEAT-6010-A06	10	-40 to +125	Serial	+5.0

Notes:
1. For other options of Magnetic Encoder, please refer to factory.

Table 1. Absolute Maximum Ratings [2, 3]

Parameter	Symbol	Limits	Units	Notes
DC Supply Voltage at pin V_{DD} = 5V	V_{DD}	-0.3 to + 7	V	
Input Voltage	V_i	-0.3 to VDD+0.3	V	
Storage Temperature	T_{STG}	-40 to 125	°C	

Notes:
2. Stresses greater than those listed under Absolute Maximum Ratings may cause permanent damage to the device. This is stress rating only and functional operation of the device at these or any other conditions above those indicated in the operational sections of this specification is not implied.
3. Exposure to absolute maximum rating conditions for extended periods may affect reliability.

Table 2. Recommended Operating Condition

Parameter	Symbol	Values	Units	Notes
DC Supply Voltage at pin V_{DD} = 5V	V_{DD}	+4.5 / +5.5	V	
Ambient Temperature	T_{amb}	–40 to +125	°C	
Maximum Read-out Frequency	f_{CLK}	≤1	MHz	>0 MHz

Table 3. DC Characteristics

DC Characteristics over Recommended Operating Range, typical at 25 °C

			Values				
Parameter	Symbol	Condition	Min	Typ.	Max	Units	Notes
VDD Supply Current	I_{DD}			16	20	mA	
Output High Voltage D0	V_{OH}		V_{DD}-0.5			V	
Output Low Voltage D0	V_{OL}				V_{SS}+0.4	V	
Output Current D0	I_O				4	mA	V_{DD} pin = 4.5V
Input High Voltage CLK, CSn	V_{IH}		0.7*V_{DD}				4
Input Low Voltage CLK, CSn	V_{IL}				0.3*V_{DD}		

Note:
4. CSn is internal pull-up.

chanhvinh.com

Package Dimensions

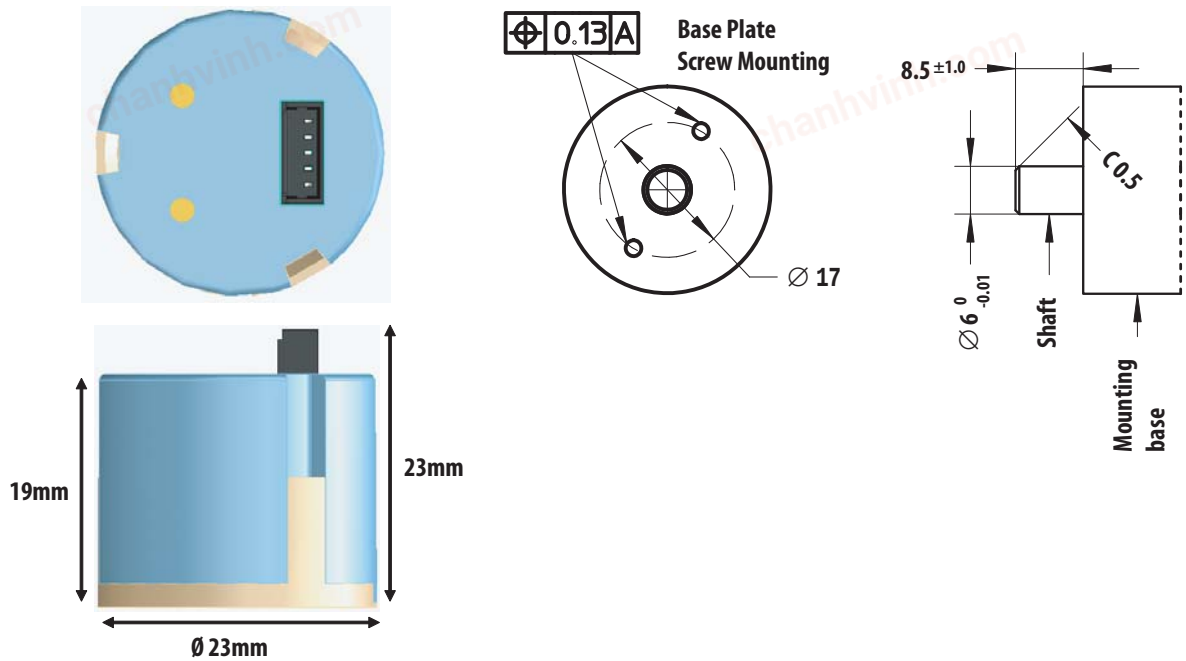

Figure 1. Package and recommended mounting dimension

Parameters

No.	Parameter	Value
1	Operating Temp(˚C)	- 40 to +125
2	Shaft axial play (mm)	± 0.08
3	Shaft TIR (mm)	0.05
4	Mechanical speed (rpm)	12,000
5	Shaft diameter (mm)	6 + 0 / -0.01
6	Moment inertia (g-cm^2)	0.104
7	Shaft length – (mm)	8.5 ±1.0
8	Mounting screw size (mm)	M2 x 0.4 x 8 (socket head cap screw, head Ø3.8 ± 0.18 mm)
9	Recommended screw torque	0.6 lb.inch
10	Encoder base plate thickness (mm)	2
11	Bolt circle	± 0.13

* Note:- For high temperature application, it is highly recommended that adhesive be applied at least to the screw and the base plate interface. Refer Application Note for further details.

chanhvinh.com

Table 4. Timing Characteristics

Timing Characteristics over Recommended Operating Range, typical at 25 °C

Parameter	Symbol	Condition	Values			Units	Notes
			Min	Typ.	Max		
Data output activated (logic high)	$T_{DO\ active}$				100	ns	1
First data shifted to output register	$t_{CLK\ FE}$		500			ns	2
Start of data output	$T_{CLK/2}$		500			ns	3
Data output valid	$T_{DO\ valid}$				375	ns	4
Data output tristate	$T_{DO\ tristate}$				100	ns	5
Pulse width of CSn	T_{CSn}		500			ns	6
Sampling rate for absolute output	f_{abs}		9.9	10.42	10.94	kHz	7
Power-up time	t_{CF}						8
10-bit version			-	-	50	ms	
12-bit version			-	-	20	ms	

Notes:
1. Time between falling edge of CSn and data output activated
2. Time between falling edge of CSn and first falling edge of CLK
3. Rising edge of CLK shifts out one bit a time
4. Time between rising edge of CLK and data output valid
5. After the last bit DO changes back to "tristate"
6. CSn=high; To initiate read-out of next angular position
7. Internal sampling rate.
8. Until internal compensation finished

Timing Characteristics

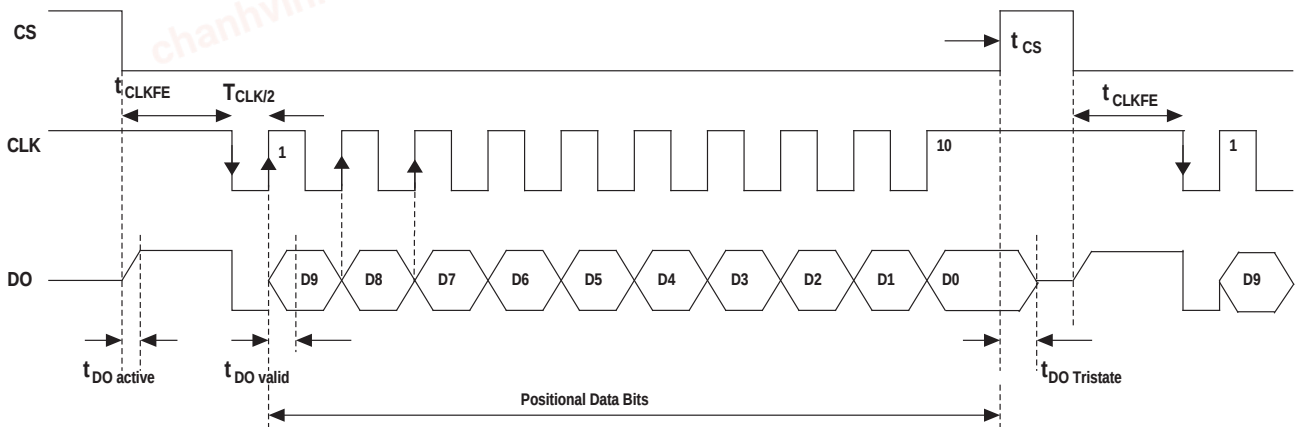

Notes:
1. Please refer to Table 4 for Timing Characteristics.
2. For 12 bits version; the Positional Data Bits will start with D11 instead and end at D0.

Figure 2. Timing Diagram for 10 bit Magnetic Encoder

chanhvinh.com

Table 5. Linearity

Parameter	Symbol	Min.	Typ.	Max	Units	Notes
Integral Non-Linearity	INL	-	± 0.8 [1]	± 2.4 [2]	Deg.	
Differential Non-Linearity						
10-bit version	DNL	-	-	± 0.176	Deg.	No missing codes
12-bit version		-	-	± 0.044	Deg.	No missing codes

Notes:
1. Average value at typical operating and mounting conditions.
2. Maximum value over recommended operating range and over radial & axial mounting tolerances.

Linearity Definitions

Integral non-linearity

Integral non-linearity (INL) is the maximum deviation between actual angular position and the position indicated by the encoder's output count, over one revolution. It is defined as the most positive linearity error +INL or the most negative linearity error –INL from the best fit line, whichever is larger.

Differential non-linearity

Differential non-linearity (DNL) is the maximum deviation of the step length from one position to the next.

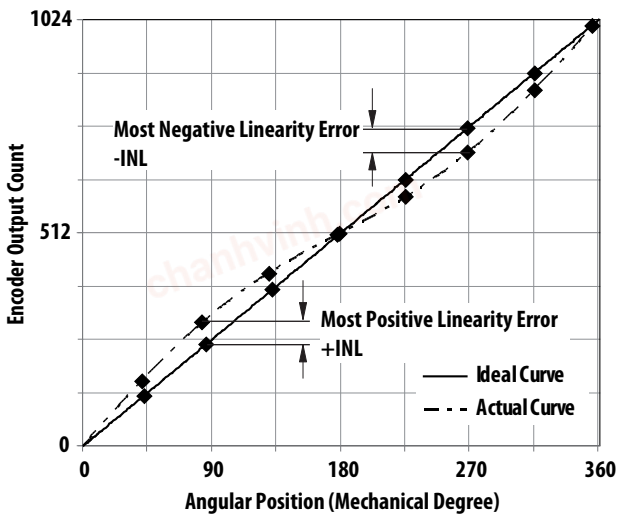

Figure 3. Integral non-linearity

Table 6. Environmental Specifications

Parameter	Reference Standard	Test Conditions	Level
Electromagnetic Compatibility (EMC) [1]			
Electrostatic discharge (ESD) immunity	IEC/EN 61000-4-2	8kV	
Power frequency magnetic field immunity	IEC/EN 61000-4-8	30 A/m (continuous field)	
		300 A/m (short duration field)	Level 4
Pulse magnetic field immunity	IEC/EN 61000-4-97	1000 A/m	Level 5
Damped oscillatory magnetic field immunity	IEC/EN 61000-4-10	100 A/m	Level 5
Mechanical Durability			
Vibration (Operating)	IEC/EN 60068-2-6	10-500Hz at 5G	
Shock	IEC/EN 60068-2-27	6ms at 200G	

Notes:
1. Suitable for applications in Industrial Environment Class 4.

chanhvinh.com

Electrical Connections

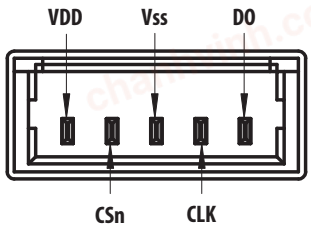

Pin	Symbol	Description
1	VDD	5V Supply Voltage
2	CSn	Chip Select – Input (See Figure 2)
3	VSS	Supply Ground
4	CLK	Serial Clock - Input (See Figure 2)
5	DO	Serial Data - Output. (See Figure 2)

Figure 4. Electrical Connections

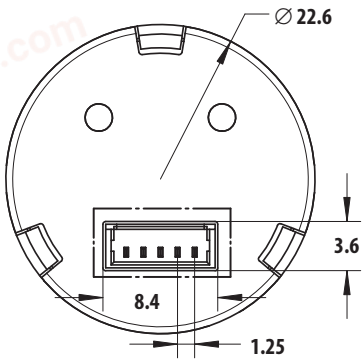

Figure 5. Basic connector dimensions

Alignment Tool Set - Part number HEDS-8934

This optional alignment tool set consists of a gap setting plate and a centering jig. Refer to Application Note 5317 for the assembly guide.

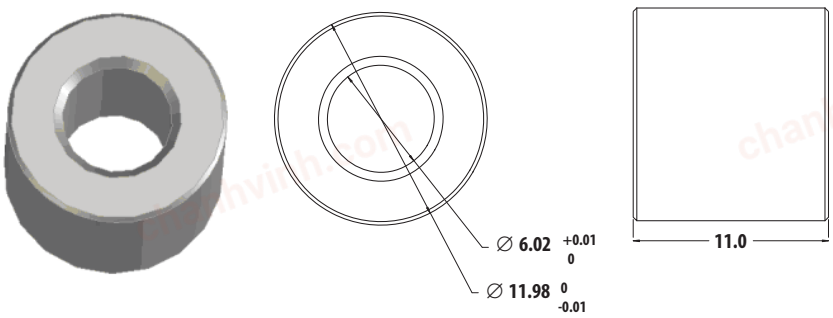

Centering Jig

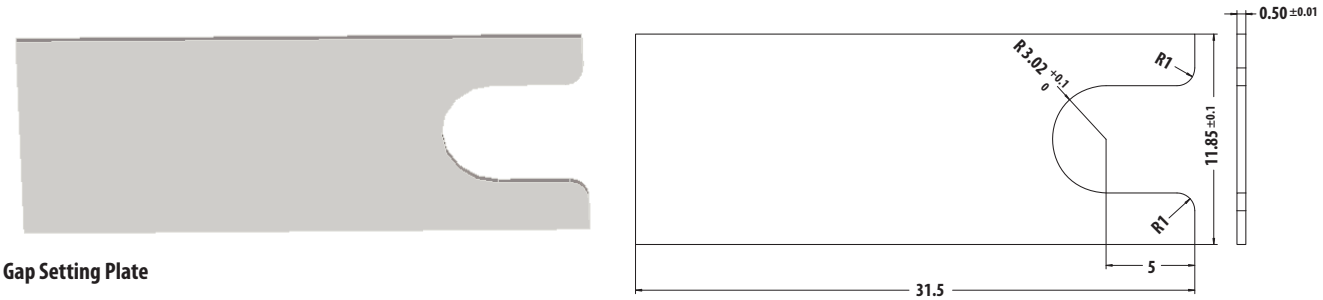

Gap Setting Plate

Figure 6. Alignment tool set and recommended dimensions

chanhvinh.com

Ordering Information

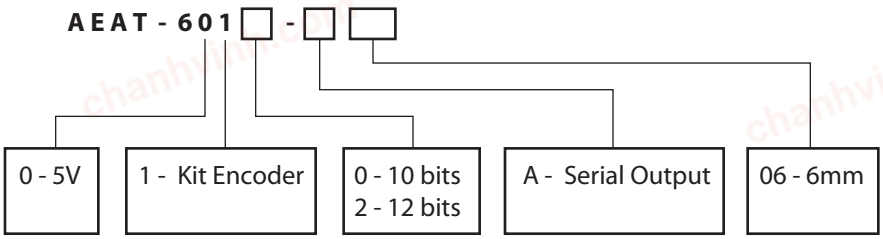

For product information and a complete list of distributors, please go to our web site: **www.avagotech.com**

Avago, Avago Technologies, and the A logo are trademarks of Avago Technologies in the United States and other countries.
Data subject to change. Copyright © 2005-2011 Avago Technologies. All rights reserved.
AV02-0188EN - August 12, 2011