chanhvinh.com

ACPL-M49T

Wide Operating Temperature Automotive R^{2}Coupler™ 20-kBd Digital Optocoupler Configurable as Low Power, Low Leakage Phototransistor

Data Sheet

Description

The ACPL-M49T is a single channel, high temperature, high CMR, 20-kBd digital optocoupler, configurable as a low power, low leakage phototransistor, specifically for use in the automotive applications. The SO-5 JEDEC registered (MO-155) package outline is surface mountable.

This digital optocoupler uses an insulating layer between the light emitting diode and an integrated photo detector to provide electrical insulation between input and output. Separate connections for the photodiode bias and output transistor collector in a 5-pin configuration increase the speed up to a hundred times over that of a conventional phototransistor by reducing the base-collector capacitance. Common connections with the supply and output pins shorted in a 4-pin configuration delivers low power, low leakage performance as a phototransistor. The ACPL-M49T has an increased common mode transient immunity of 15kV/µs minimum at V_{CM} = 1500V over extended temperature range.

Broadcom® R^{2}Coupler™ isolation products provide the reinforced insulation and reliability needed for critical in automotive and high temperature industrial applications.

Features

- Qualified to Automotive AEC-Q100 Test Guidelines
- High temperature and reliable low-speed digital interface for automotive applications
- Wide temperature range: –40°C ~ 125°C
- 30 kV/µs high common-mode rejection at V_{CM} = 1500V (typ)
- Low power, low leakage phototransistor in a 4-pin configuration
- Compact, auto-insertable SO5 packages
- Low LED drive current: 4 mA (typ)
- Propagation delay: 20 µs (max)
- Worldwide safety approval:
  - UL 1577, 4000 V_{RMS} /1 min.
  - CSA approved
  - IEC/EN/DIN EN 60747-5-5

Applications

- Automotive low-speed digital signal isolation interface
- Inverter fault feedback signal isolation
- Switching power supplies feedback circuit

CAUTION: It is advised that normal static precautions be taken in handling and assembly of this component to prevent damage and/or degradation that may be induced by ESD. The components featured in this data sheet are not to be used in military or aerospace applications or environments.

chanhvinh.com

Functional Diagrams

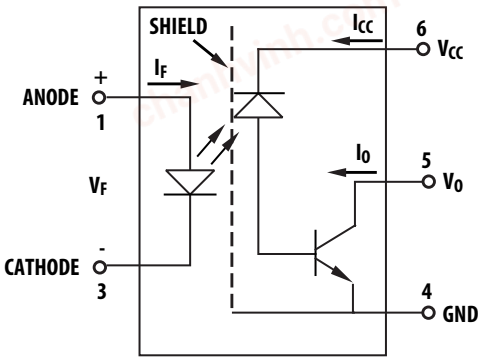

NOTE The connection of a 0.1-µF bypass capacitor between pins 4 and 6 is recommended for 5-pin configuration.

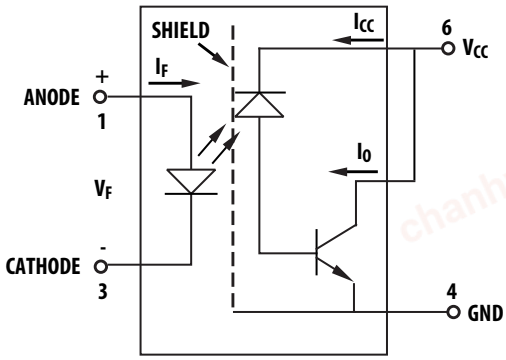

NOTE Pins 5 and 6 are externally shorted for 4-pin configuration.

LED	Vo
ON	LOW
OFF	HIGH

Ordering Information

Part Number	Option (RoHS) Compliant	Package	Surface Mount	Tape and Reel	IEC/EN/DIN EN 60747-5-5	Quantity
ACPL-M49T	-000E	SO-5	X			100 per tube
	-060E		X		X	100 per tube
	-500E		X	X		1500 per reel
	-560E		X	X	X	1500 per reel

To order, choose a part number from the part number column and combine with the desired option from the option column to form an order entry.

Example:

ACPL-M49T-500E to order product of Mini-flat Surface Mount 5-pin package in Tape and Reel packaging with RoHS compliant.

Option data sheets are available. Contact your Broadcom sales representative or authorized distributor for information.

chanhvinh.com

Package Outline Drawings

ACPL-M49T Small Outline SO-5 Package (JEDEC MO-155)

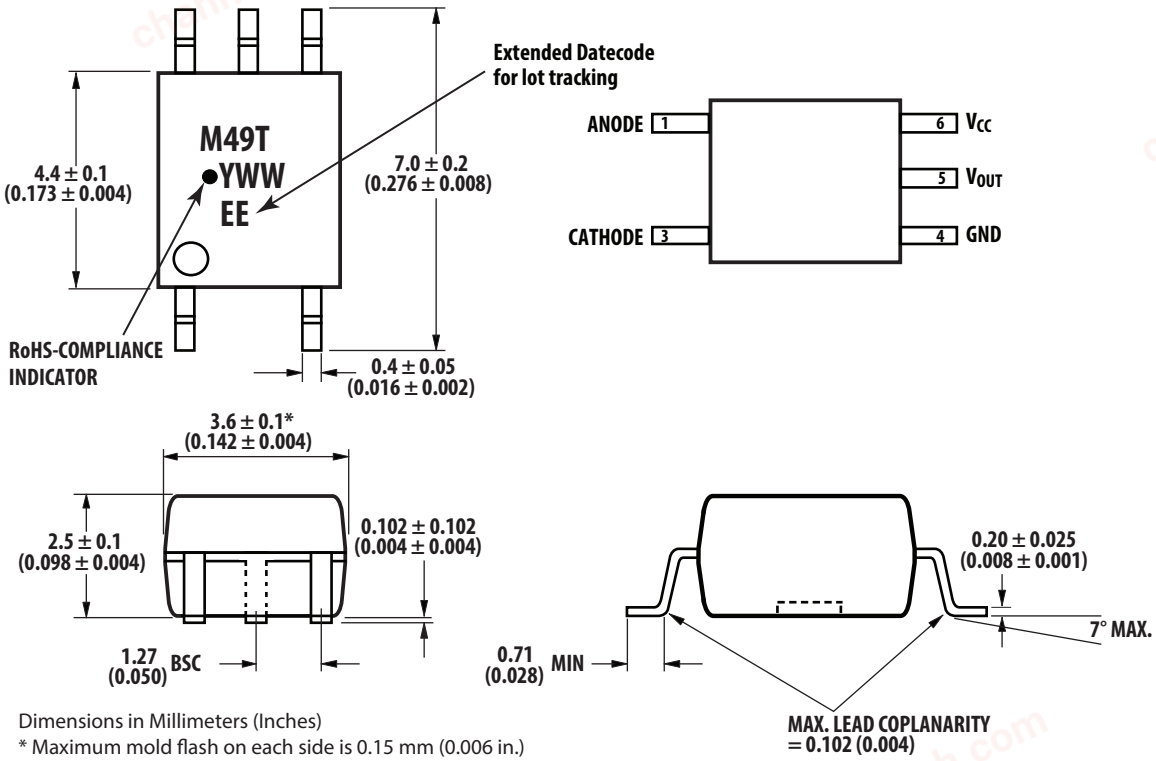

Dimensions in Millimeters (Inches)
* Maximum mold flash on each side is 0.15 mm (0.006 in.)
Note: Floating lead protrusion is 0.15 mm (6 mils) max.

Land Pattern Recommendation

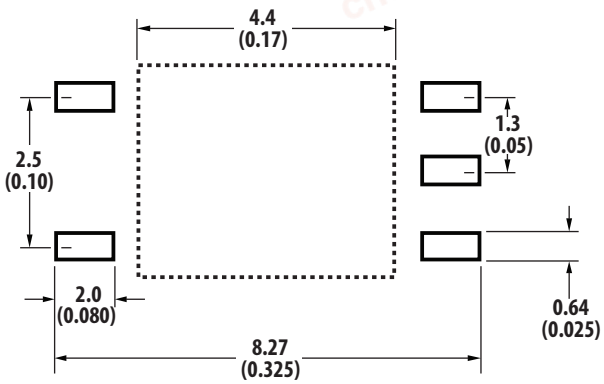

Dimension in Millimeters (Inches)

Land Pattern Recommendation (4-pin Configuration)

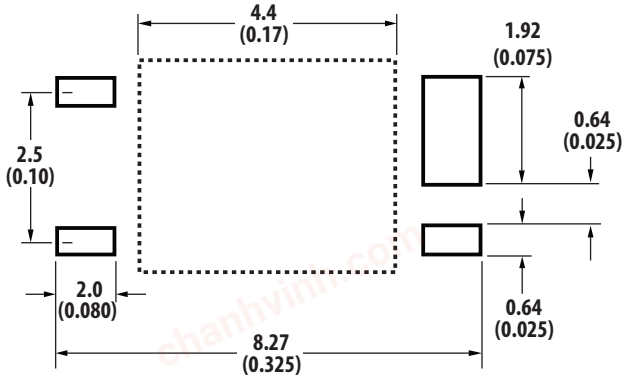

Dimension in Millimeters (Inches)

chanhvinh.com

Recommended Pb-Free IR Profile

Recommended reflow condition as per JEDEC Standard, J-STD-020 (latest revision).

NOTE Non-halide flux should be used.

Regulatory Information

The ACPL-M49T is approved by the following safety regulatory organizations.

UL	Approved under UL 1577, component recognition program up to V_{ISO} = 4000 V_{RMS}
CSA	Approved under CSA Component Acceptance Notice #5.
IEC/EN/DIN EN 60747-5-5	■ EC 60747-5-5 ■ EN 60747-5-5 ■ DIN EN 60747-5-5

IEC/EN/DIN EN 60747-5-5 Insulation Characteristics[a]

Description	Symbol	Characteristic	Units
Installation classification per DIN VDE 0110/1.89, Table 1 for rated mains voltage ≤150 V_{rms} for rated mains voltage ≤ 300 V_{rms} for rated mains voltage ≤ 600 V_{rms}		 I – IV I – III I – II	
Climatic Classification		40/125/21	
Pollution Degree (DIN VDE 0110/1.89)		2	
Maximum Working Insulation Voltage	V_{IORM}	567	V_{peak}
Input to Output Test Voltage, Method b[a] $V_{IORM} \times 1.875 = V_{PR}$, 100% Production Test with t_m = 1s, Partial discharge < 5 pC	V_{PR}	1063	V_{peak}
Input to Output Test Voltage, Method a[a] $V_{IORM} \times 1.6 = V_{PR}$, Type and Sample Test, t_m = 10s, Partial discharge < 5 pC	V_{PR}	907	V_{peak}
Highest Allowable Overvoltage (Transient Overvoltage t_{ini} = 60s)	V_{IOTM}	6000	V_{peak}
Safety-limiting values – maximum values allowed in the event of a failure. Case Temperature Input Current Output Power	 T_S $I_{S, INPUT}$ $P_{S, OUTPUT}$	 175 230 600	 °C mA mW
Insulation Resistance at T_S, V_{IO} = 500V	R_S	$>10^9$	Ω

a. Refer to the optocoupler section of the Isolation and Control Components Designer's Catalog, under Product Safety Regulations section, (IEC/EN/DIN EN 60747-5-5) for a detailed description of Method a and Method b partial discharge test profi les.

chanhvinh.com

Insulation and Safety-Related Specifications

Parameter	Symbol	ACPL-M49T	Units	Conditions
Minimum External Air Gap (Clearance)	L(101)	≥ 5	mm	Measured from input terminals to output terminals, shortest distance through air.
Minimum External Tracking (Creepage)	L(102)	≥ 5	mm	Measured from input terminals to output terminals, shortest distance path along body.
Minimum Internal Plastic Gap (Internal Clearance)		0.08	mm	Through insulation distance conductor to conductor, usually the straight line distance thickness between the emitter and detector.
Tracking Resistance (Comparative Tracking Index)	CTI	175	V	DIN IEC 112/VDE 0303 Part 1
Isolation Group (DIN VDE0109)		IIIa		Material Group (DIN VDE 0109)

Absolute Maximum Ratings

Parameter		Symbol	Min.	Max.	Units	Note
Storage Temperature		T_S	–55	150	°C	
Operating Temperature		T_A	–40	125	°C	
Lead Soldering Cycle	Temperature		—	260	°C	
	Time		—	10	s	
Average Forward Input Current		$I_{F(avg)}$	—	20	mA	a
Peak Forward Input Current 50% duty cycle, 1-ms pulse width)		$IF_{(peak)}$	—	40	mA	b
Peak Transient Input Current (≤1-µs pulse width, 300 ps)		$I_{F(trans)}$	—	100	mA	b
Reversed Input Voltage		V_R	—	5	V	Pin 3 - 1
Input Power Dissipation		P_{IN}	—	30	mW	c
Output Power Dissipation		P_O	—	100	mW	d
Average Output Current		I_O	—	8	mA	
Peak Output Current		$I_{o(pk)}$	—	16	mA	
Supply Voltage (Pins 6–4)		V_{CC}	–0.5	30	V	
Output Voltage (Pins 5–4)		V_O	–0.5	20	V	
Solder Reflow Temperature Profile		See Reflow Temperature Profile				

a. Derate linearly above 85°C free-air temperature at a rate of 0.25 mA/°C.
b. Derate linearly above 85°C free-air temperature at a rate of 0.30 mA/°C.
c. Derate linearly above 85°C free-air temperature at a rate of 0.375 mW/°C.
d. Derate linearly above 85°C free-air temperature at a rate of 1.875 mW/°C.

Recommended Operating Conditions

Parameter	Symbol	Min.	Max.	Units	Note
Supply Voltage	V_{CC}	—	20.0	V	
Operating Temperature	T_A	–40	125	°C	

chanhvinh.com

Electrical Specifications (DC) for 5-Pin Configuration

Over recommended operating T_A =–40°C to 125°C, unless otherwise specified.

Parameter	Sym.	Min.	Typ.	Max.	Units	Conditions			Figure	Note
Current Transfer Ratio	CTR	32	45	80	%	T_A = 25°C	V_O = 0.4V	V_{CC} = 4.5V, I_F = 10 mA	1, 2	a
		20	45	—			V_O = 0.5V			
		—	58	—		T_A = 25°C	V_O = 0.5V	V_{CC} = 4.5V, I_F = 4 mA	1, 2	a
Logic Low Output Voltage	V_{OL}	—	0.1	0.4	V	T_A = 25°C	I_O = 3mA	V_{CC} = 4.5V, I_F = 10 mA	3	
		—	—	0.5			I_O = 2.4 mA			
Logic High Output Current	I_{OH}	—	0.003	0.5	µA	T_A = 25°C	V_O = V_{CC} = 5.5V	I_F=0mA	7	
		—	0.01	1		T_A = 25°C	V_O = V_{CC} = 15V			
		—	—	5						
Logic Low Supply Current	I_{CCL}	—	50	200		I_F = 10 mA, V_O = open, V_{CC} = 15V				
Logic High Supply Current	I_{CCH}	—	0.02	1		T_A = 25°C	I_F = 0 mA, V_O = open, V_{CC} = 15V			
		—	—	2.5						
Input Forward Voltage	V_F	1.45	1.5	1.75	V	I_F = 10 mA, T_A = 25°C			5	
		1.25	1.5	1.85		I_F = 10 mA				
		—	1.5	—		I_F = 4 mA, T_A = 25°C				
Input Reversed Breakdown Voltage	BV_R	5	—	—	—	I_R = 10 µA				
Temperature Coefficient of Forward Voltage	$\Delta V/\Delta T_A$		–1.5		mV/°C	I_F = 10 mA				
Input Capacitance	C_{IN}	—	90		pF	F = 1 MHz, V_F = 0				

a. Current transfer ratio in percent is defined as the ratio of output collector current, I_O, to the forward LED input current, I_F, times 100.

chanhvinh.com

Switching Specifications (AC) for 5-Pin Configuration

Over recommended operating T_A = –40°C to 125°C, V_{CC} = 5.0 V unless otherwise specified.

Parameter	Symbol	Min.	Typ.	Max.	Units	Test Conditions		Figure	Note
Propagation Delay Time to Logic Low at Output	t_{PHL}	—	—	20	µs	Pulse: f = 10 kHz, Duty cycle = 50%, I_F = 4 mA, V_{CC} = 5.0 V, R_L=8.2 kΩ, C_L = 15 pF, V_{THHL} = 1.5V		9	
Propagation Delay Time to Logic High at Output	t_{PLH}	—	—	20	µs	Pulse: f = 10 kHz, Duty cycle = 50%, I_F = 4 mA, V_{CC} = 5.0 V, R_L = 8.2 kΩ, C_L = 15 pF, V_{THLH}=2.0V		9	
Common Mode Transient Immunity at Logic High Output	$\|CM_H\|$	15	30	—	kV/µs	I_F = 0 mA	V_{CM} = 1500 V_{p-p}, T_A = 25°C, R_L = 8.2 kΩ	10	a
Common Mode Transient Immunity at Logic Low Output	$\|CM_L\|$	15	30	—	kV/µs	I_F = 10 mA	V_{CM} = 1500 V_{p-p}, T_A = 25°C, R_L = 8.2 kΩ		
Common Mode Transient Immunity at Logic Low Output	$\|CM_L\|$	–	15	—	kV/µs	I_F = 4 mA	V_{CM} = 1500 V_{p-p}, T_A = 25°C, R_L = 8.2 kΩ		

a. Common transient immunity in a Logic High level is the maximum tolerable (positive) dV_{CM}/dt on the rising edge of the common mode pulse, V_{CM}, to assure that the output will remain in a Logic High state (that is, Vo > 2.0V). Common mode transient immunity in a Logic Low level is the maximum tolerable (negative) dV_{CM}/dt on the falling edge of the common mode pulse signal, V_{CM} to assure that the output will remain in a Logic Low state (that is, Vo < 0.8V).

Electrical Specifications (DC) for 4-Pin Configuration

Applicable for V_{CC} = V_O. Over recommended operating T_A = –40°C to 125°C, unless otherwise specified.

Parameter	Sym.	Min.	Typ.	Max.	Units	Conditions			Figure	Note
Current Transfer Ratio	CTR	—	120	—	%	T_A = 25°C, I_F = 5 mA, V_{CC} = V_O = 5V			4	a, b
Current Transfer Ratio	CTR (Sat)	20	45	—	%	I_F = 10 mA	V_{CC} = V_O = 0.5V		5	a, b
			58			I_F = 4mA				
Logic Low Output Voltage	V_{OL}	—	0.1	0.4	V	T_A = 25°C	I_O = 3 mA	I_F= 10 mA	5	b
				0.5			I_O = 2.4 mA			
Off-State Current	$I_{(CEO)}$	—	0.0001	5	µA	V_O = V_{CC} = 15V, I_F = 0 mA			8	b
Input Forward Voltage	V_F	1.45	1.5	1.75	V	I_F = 10 mA, T_A = 25°C			6	
		1.25	1.5	1.85		I_F = 10 mA				
		—	1.45	—		I_F = 4 mA, T_A = 25°C				
Temperature Coefficient of Forward Voltage	$\Delta V/\Delta T_A$	—	–1.5	—	mV/°C	I_F = 10 mA				
Input Reversed Breakdown Voltage	BV_R	5	—	—	—	I_R = 10 mA				
Input Capacitance	C_{IN}	—	90	—	pF	F = 1 MHz, V_F = 0				
Output Capacitance	C_{CE}	—	35	—	pF	F = 1 MHz, V_F = 0, V_O = V_{CC} = 0V				b

a. Current transfer ratio in percent is defined as the ratio of output collector current, I_O, to the forward LED input current, I_F, times 100.

b. This is in a 4-pin configuration where the V_{CC} and V_O pins are shorted together.

chanhvinh.com

Switching Specifications (AC) for 4-Pin Configuration

Over recommended operating T_A = –40°C to 125°C, V_{CC} = 5.0 V unless otherwise specified.

Parameter	Symbol	Min.	Typ.	Max.	Units	Test Conditions		Figure	Note
Propagation Delay Time to Logic Low at Output	t_{PHL}	—	2	100	µs	Pulse: f = 1 kHz, Duty cycle = 50%, I_F = 4 mA, V_{CC} = 5.0 V, R_L=8.2 kΩ, C_L = 15 pF, V_{THHL} = 1.5V		10	a
Propagation Delay Time to Logic High at Output	t_{PLH}	—	19	100	µs	Pulse: f = 1 kHz, Duty cycle = 50%, I_F = 4 mA, V_{CC} = 5.0 V, R_L = 8.2 kΩ, C_L = 15 pF, V_{THLH}=2.0V		10	a
Common Mode Transient Immunity at Logic High Output	$\|CM_H\|$	15	30	—	kV/µs	I_F = 0 mA	V_{CM} = 1500 V_{p-p}, T_A = 25°C, R_L = 8.2 kΩ	12	a, b
Common Mode Transient Immunity at Logic Low Output	$\|CM_L\|$	15	30	—	kV/µs	I_F = 10 mA	V_{CM} = 1500 V_{p-p}, T_A = 25°C, R_L = 8.2 kΩ		

a. This is in a 4-pin configuration where the V_{CC} and V_O pin are shorted together.

b. Common transient immunity in a Logic High level is the maximum tolerable (positive) dV_{CM}/dt on the rising edge of the common mode pulse, V_{CM}, to assure that the output will remain in a Logic High state (that is, Vo > 2.0V). Common mode transient immunity in a Logic Low level is the maximum tolerable (negative) dV_{CM}/dt on the falling edge of the common mode pulse signal, V_{CM} to assure that the output will remain in a Logic Low state (that is, Vo < 0.8V).

Package Characteristics

Parameter	Symbol	Min.	Typ.	Max.	Units	Test Conditions	Fig.	Note
Input-Output Momentary Withstand Voltage[a]	V_{ISO}	4000	—	—	V_{RMS}	RH ≤ 50%, t = 1 min., T_A = 25°C		b, c
Input-Output Resistance	R_{I-O}	—	10^{14}	—	Ω	V_{I-O} = 500 V_{DC}		b
Input-Output Capacitance	C_{I-O}	—	0.6	—	pF	f = 1 MHz, V_{I-O} = 0 V_{DC}		b

a. The Input-Output Momentary Withstand Voltage is a dielectric voltage rating that should not be interpreted as an input-output continuous voltage rating.

b. The device is considered a two terminal device: pins 1 and 3 shorted together, and pins 4, 5, and 6 shorted together.

c. In accordance with UL 1577, each optocoupler is proof tested by applying an insulation test voltage ≥ 4800 V_{RMS} for 1 second.

chanhvinh.com

Figure 1 Normalized Current Transfer Ratio (I_F = 4 mA as Reference) vs. Input Current

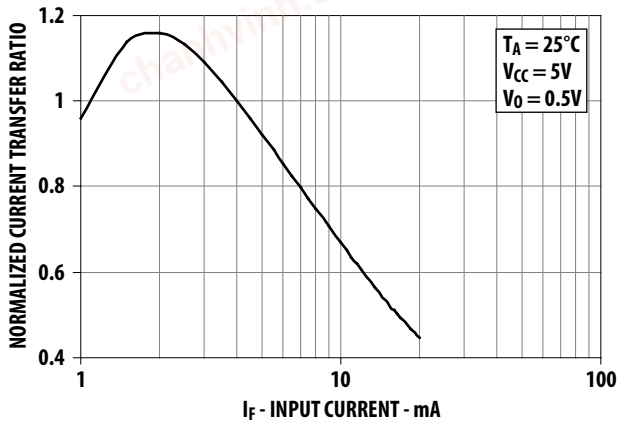

Figure 2 Normalized Current Transfer Ratio (T_A = 25°C as Reference) vs. Temperature

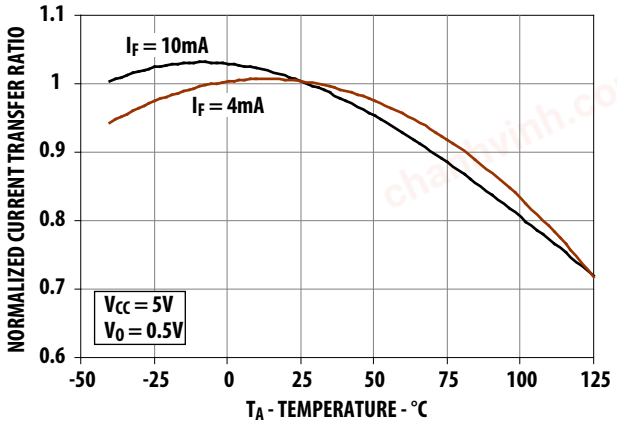

Figure 3 Typical Low Level Output Current vs. Output Voltage

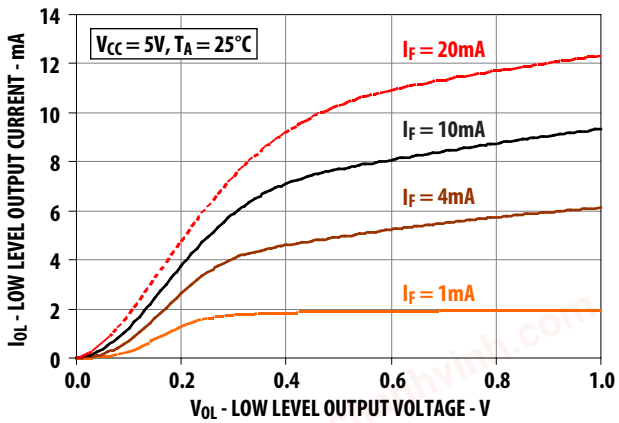

Figure 4 Output Current vs. Output Voltage (4-Pin Configuration)

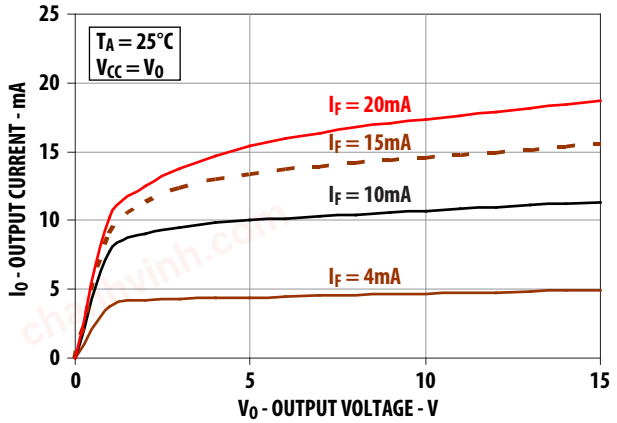

Figure 5 Typical Low Level Output Current vs. Output Voltage (4-Pin Configuration)

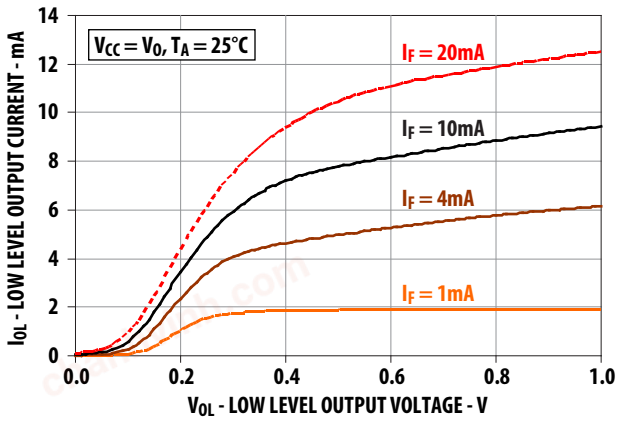

Figure 6 Typical Input Current vs. Forward Voltage

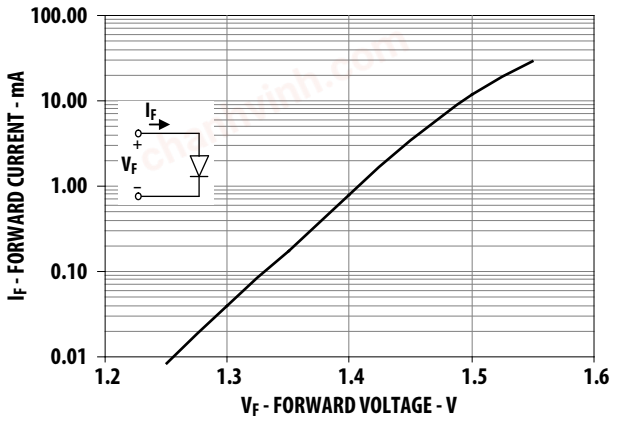

chanhvinh.com

Figure 7 Typical High Level Output Current vs. Temperature

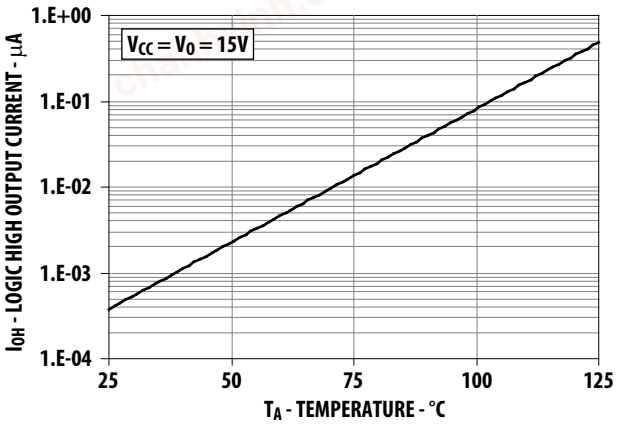

Figure 8 Typical Off -State Current vs. Temperature (4-Pin Configuration)

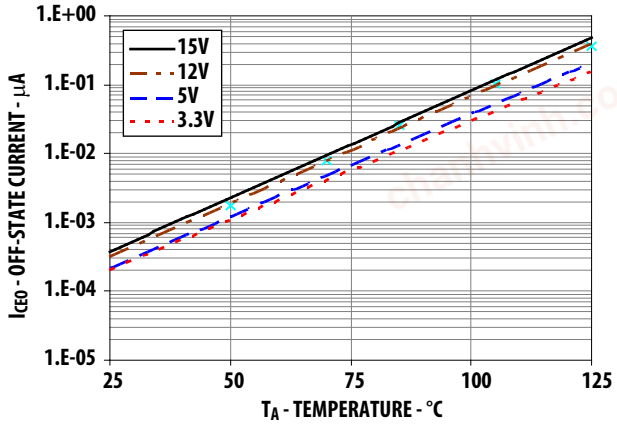

Figure 9 Switching Test Circuit

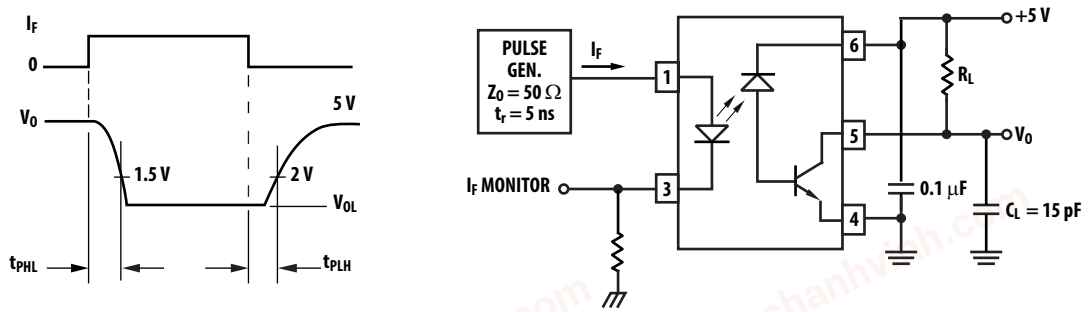

Figure 10 Switching Test Circuit (4-pin Configuration)

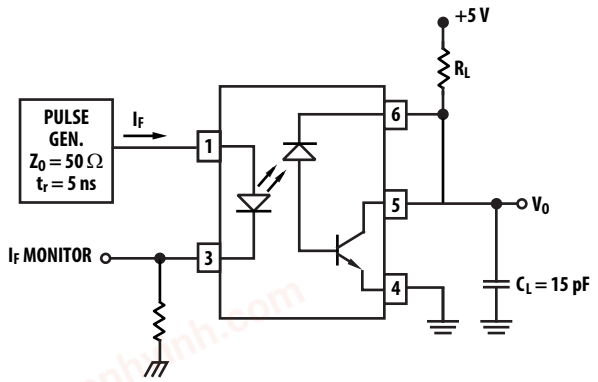

chanhvinh.com

Figure 11 Test Circuit for Transient Immunity and Typical Waveforms

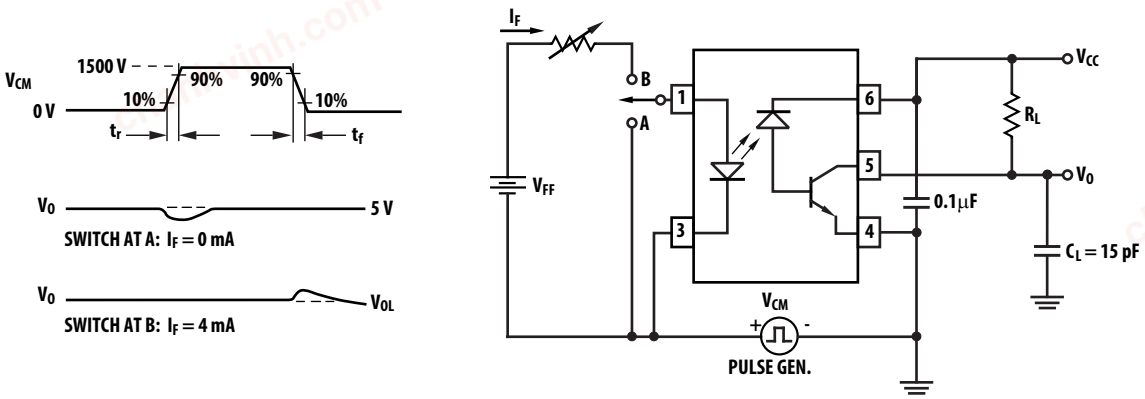

Figure 12 Test Circuit for Transient Immunity and Typical Waveforms (4-Pin Configuration)

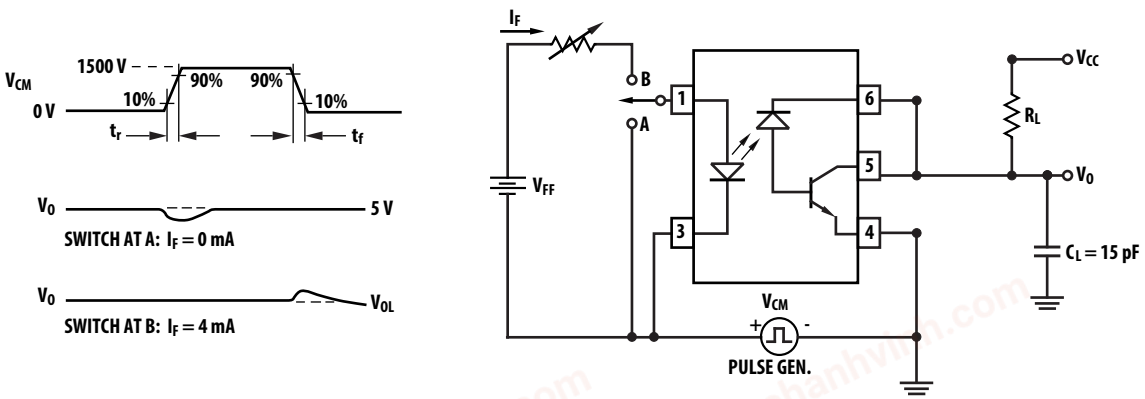

chanhvinh.com

For product information and a complete list of distributors, please go to our web site: www.broadcom.com.

Broadcom, the pulse logo, Connecting everything, Avago Technologies, Avago, the A logo, and R^{2}Coupler are among the trademarks of Broadcom and/or its affiliates in the United States, certain other countries and/or the EU.

Copyright © 2011–2017 by Broadcom. All Rights Reserved.

The term "Broadcom" refers to Broadcom Limited and/or its subsidiaries. For more information, please visit www.broadcom.com.

Broadcom reserves the right to make changes without further notice to any products or data herein to improve reliability, function, or design.

Information furnished by Broadcom is believed to be accurate and reliable. However, Broadcom does not assume any liability arising out of the application or use of this information, nor the application or use of any product or circuit described herein, neither does it convey any license under its patent rights nor the rights of others.

AV02-2373EN – July 10, 2017

Lead (Pb) Free
RoHS 6 fully compliant
RoHS 6 fully compliant options available;
-xxxE denotes a lead-free product