chanhvinh.com

BROADCOM®

Data Sheet

ACPL-M417T

Automotive Low-Power, High-Gain Optocoupler with Transistor Output

Description

The Broadcom® ACPL-M417T is a single-channel low-speed optocoupler with transistor output. The ACPL-M417T comes in a compact, surface-mountable SO4 package for space savings. It provides an isolation voltage of 4 kV_{RMS} between input and output channels.

The ACPL-M417T is primarily designed for low-power operation, with low-operating LED drive current of 0.3 mA for low-speed signaling. The low collector dark current effectively does not consume any current when not in use.

Broadcom R^2Coupler™ isolation products provide reinforced insulation and reliability that delivers safe signal isolation critical in automotive and high temperature industrial applications.

Functional Diagram

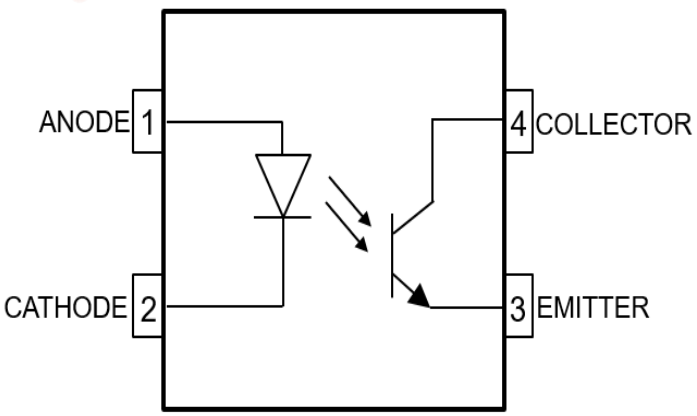

Features

- Qualified to AEC-Q101 Test Guidelines
- Automotive temperature range: –40°C to +125°C
- Specifications across full temperature range
- BV_{CEO} min. of 80V
- Low I_F drive of 0.3 mA
- Tight CTR range
- Single channel in SO4 package with 5 mm creepage and clearance
- Regulatory approvals:
  - UL1577 4 kV_{RMS} for 1 minute
  - CSA approval
  - IEC/EN 60747-5-5 V_{IORM} = 567 V_{PEAK}

Applications

- Electric Vehicle Powertrain
- DC-DC Converter
- EV/PHEV Charger
- HVAC
- Fault reporting modules

CAUTION! It is advised that normal static precautions be taken in handling and assembly of this component to prevent damage and/or degradation which may be induced by ESD. The components featured in this data sheet are not to be used in military or aerospace applications or environments.

chanhvinh.com

Package Pin Out

Figure 1: Pin Out

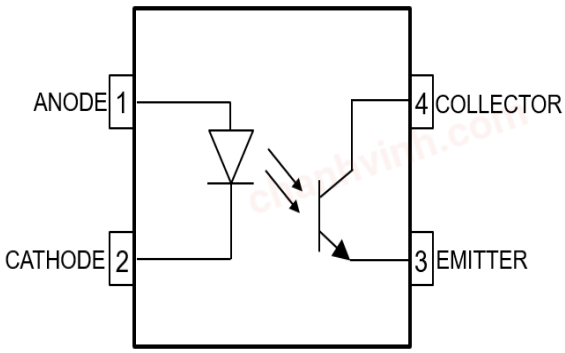

Pin Description

Pin Number	Name	Function
1	AN	Anode
2	CA	Cathode
3	E	Emitter
4	C	Collector

Ordering Information

Part Number	Option (RoHS Compliant)	Package	Surface Mount	Tape and Reel	UL 4000 V_{rms}/ 1 Minute Rating	IEC/EN 60747-5-5	Quantity
ACPL-M417T	-000E	SO4	X	—	X	—	100 per tube
	-500E		X	X	X	—	1500 per reel
	-560E		X	X	X	X	1500 per reel

To order, choose a part number from the part number column and combine it with the desired option from the option column to form an order entry.

Example: ACPL-M417T-560E to order the product of SO4 Surface Mount package in Tape and Reel packaging with IEC/EN 60747-5-5 Safety Approval in RoHS compliant.

Options data sheets are available. Contact your Broadcom sales representative or an authorized distributor for information.

chanhvinh.com

Package Outline Drawing

Figure 2: Small Outline SO4 Package

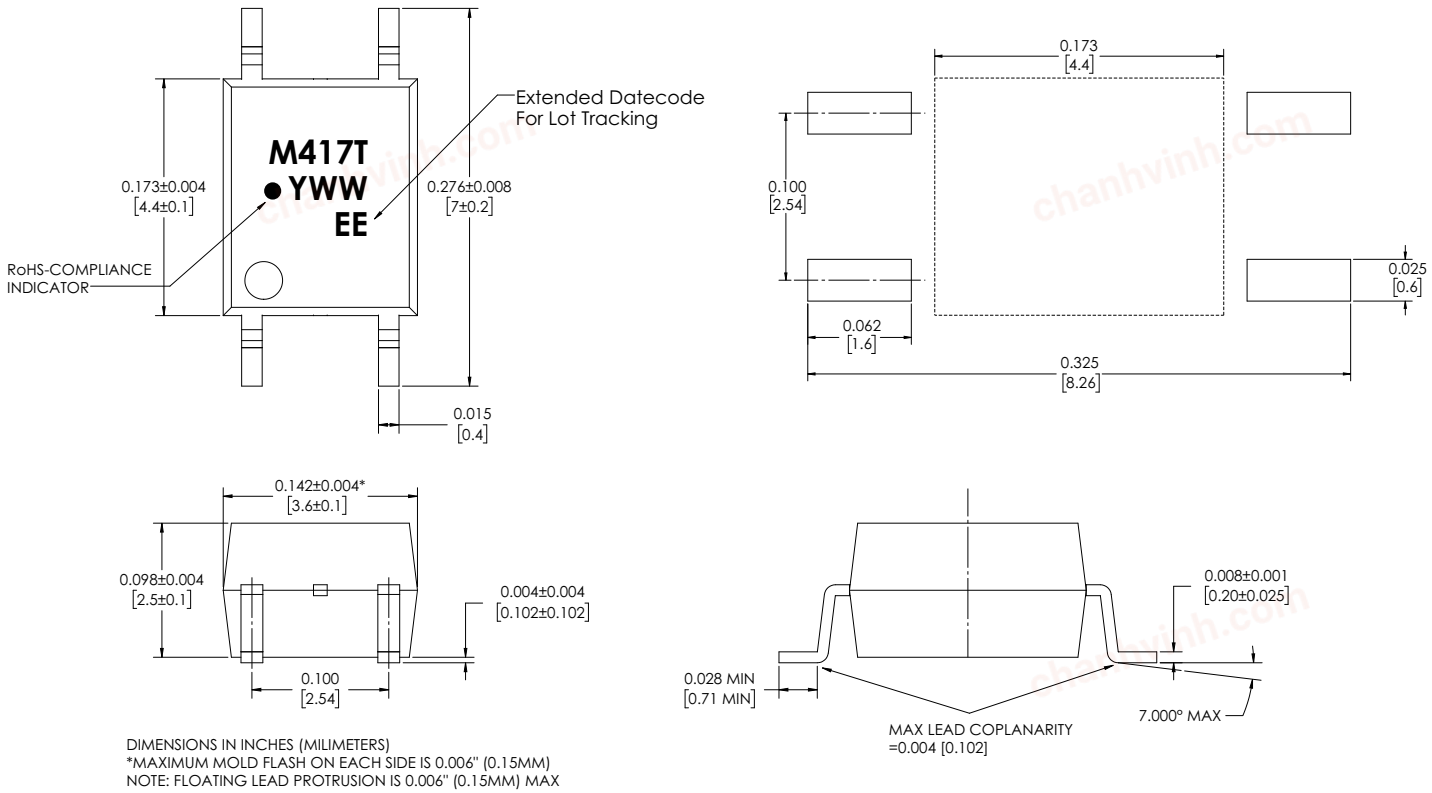

DIMENSIONS IN INCHES (MILIMETERS)
*MAXIMUM MOLD FLASH ON EACH SIDE IS 0.006" (0.15MM)
NOTE: FLOATING LEAD PROTRUSION IS 0.006" (0.15MM) MAX

Recommended PB-Free IR Profile

Recommended reflow condition as per JEDEC Standard, J-STD-020 (latest revision).

NOTE: Use non-halide flux.

Regulatory Information

The ACPL-M417T is approved by the following organizations:

UL	UL 1577, component recognition program up to V_{ISO} = 4000 V_{RMS}
CSA	CAN/CSA-C22.2 No. 62368-1
IEC/EN	IEC/EN 60747-5-5 V_{IORM} = 567 V_{PEAK} V_{IOTM} = 6000 V_{PEAK}

chanhvinh.com

IEC/EN 60747-5-5 Insulation Characteristics

Description	Symbol	Characteristic	Unit
Installation classification per DIN VDE 0110/1.89, Table 1			
For Rated Mains Voltage ≤ 150 V_{rms}	—	I – IV	—
For Rated Mains Voltage ≤ 300 V_{rms}	—	I – III	—
Climatic Classification	—	40/125/21	—
Pollution Degree (DIN VDE 0110/1.89)	—	2	—
Maximum Working Insulation Voltage	V_{IORM}	567	V_{PEAK}
Input to Output Test Voltage, Method b V_{IORM} × 1.875 = V_{PR}, 100% Production Test with t_m = 1 second, Partial discharge < 5 pC	V_{PR}	1063	V_{PEAK}
Input to Output Test Voltage, Method a V_{IORM} × 1.6 = V_{PR}, Type and Sample Test, t_m = 10 seconds, Partial discharge < 5 pC	V_{PR}	907	V_{PEAK}
Highest Allowable Overvoltage (Transient Overvoltage t_{ini} = 60 seconds)	V_{IOTM}	6000	V_{PEAK}
Safety-limiting values – maximum values allowed in the event of a failure			
Case Temperature	T_S	175	°C
Input Current	$I_{S, INPUT}$	150	mA
Output Power	$P_{S, OUTPUT}$	600	mW
Insulation Resistance at T_S, V_{IO} = 500V	R_S	$>10^9$	Ω

Insulation and Safety Related Specifications

Parameter	Symbol	Value	Units	Conditions
Minimum External Air Gap (Clearance)	L(101)	5	mm	Measured from input terminals to output terminals, shortest distance through air.
Minimum External Tracking (Creepage)	L(102)	5	mm	Measured from input terminals to output terminals, shortest distance path along body.
Minimum Internal Plastic Gap (Internal Clearance)	—	0.08	mm	Through insulation, distance conductor to conductor, usually the straight-line distance thickness between the emitter and detector.
Tracking Resistance (Comparative Tracking Index)	CTI	>175	V	DIN IEC 112/VDE 0303 Part 1
Isolation Group	—	IIIa	—	Material Group (DIN VDE 0110)

chanhvinh.com

Absolute Maximum Ratings

Parameter	Symbol	Min.	Max.	Units	Note
Storage Temperature	T_S	–55	150	°C	
Operating Ambient Temperature	T_A	–40	125	°C	
IC Junction Temperature	T_J	—	150	°C	a
Average Forward Input Current	$I_{F(AVG)}$	—	5	mA	
Peak Forward Input Current (50% duty cycle, 1 ms pulse width)	$I_{F(PEAK)}$	—	10	mA	
Reverse Input Voltage ($V_{CA} – V_{AN}$)	V_R	—	6	V	
Collector Emitter Voltage	V_{CE}	–6	80	V	
Continuous Collector Current	I_C	—	50	mA	
Peak Collector Current	$I_{C(PEAK)}$	—	100	mA	
Input Power Dissipation	P_{IN}	—	20	mW	
Output Power Dissipation	P_O	—	300	mW	a

a. Total power dissipation is derated linearly above 95°C at a rate of 5 mW/°C. Maximum LED and detector junction temperature must not exceed 150°C.

Recommended Operating Conditions

Parameter	Symbol	Min.	Max.	Unit	Note
Operating Ambient Temperature	T_A	–40	125	°C	
Collector Emitter Voltage	V_{CE}	—	48	V	
Input LED Turn on Current (ON)	$I_{F(ON)}$	0.3	1.5	mA	
Input LED Turn off Voltage ($V_{AN} – V_{CA}$)	$V_{F(OFF)}$	–5.5	0.4	V	
Collector Current	I_C	—	20	mA	a

a. Not to exceed absolute maximum rating of 300 mW.

chanhvinh.com

Electrical Specifications (DC)

Unless otherwise specified, all minimum/maximum specifications are at recommended operating conditions. All typical values are at T_A = 25°C, V_{CE} = 5V.

Parameter	Symbol	Min.	Typ.	Max.	Unit	Test Conditions	Fig.	Notes
LED Forward Voltage ($V_{AN} - V_{CA}$)	V_F	1.0	1.4	1.7	V	I_F = 0.5 mA	4	
Temperature Coefficient of LED Forward Voltage	$\Delta V_F/\Delta T_A$	—	–1.2	—	mV/°C	I_F = 0.5 mA		
LED Reverse Breakdown Voltage ($V_{CA} - V_{AN}$)	V_{BR}	6	—	—	V	I_F = –100 µA		
LED Input Capacitance	C_{IN}	—	8	—	pF	V_F = 0V		
Collector Emitter Breakdown Voltage	BV_{CEO}	80	—	—	V	I_C = 0.5 mA, I_F = 0 mA, T_A = 25°C		
Emitter Collector Breakdown Voltage	BV_{ECO}	6	10	—	V	I_E = 0.1 mA, I_F = 0 mA, T_A = 25°C		
Collector Dark Current	I_{CEO}	—	0.02	100	µA	I_F = 0 mA, V_{CE} = 48V	6	
		—	—	50	µA	I_F = 0 mA, V_{CE} = 10V		
Current Transfer Ratio	CTR	3300	5000	6600	%	I_F = 0.5 mA, V_{CE} = 2V, T_A = 25°C		a
		3300	5000	6600	%	I_F = 0.5 mA, V_{CE} = 5V, T_A = 25°C		a
		1600	5000	6800	%	I_F = 0.5 mA, V_{CE} = 5V		a
		3500	5100	7000	%	I_F = 1 mA, V_{CE} = 5V, T_A = 25°C		a
Saturated Current Transfer Ratio	CTR_{SAT}	1000	—	—	%	I_F = 0.5 mA, V_{CE} = 0.4V		a
		1000	—	—	%	I_F = 1 mA, V_{CE} = 0.4V		a
Saturated Voltage	$V_{CE(SAT)}$	—	0.1	0.4	V	I_F = 0.5 mA, I_C = 5 mA	12	
		—	0.1	0.4	V	I_F = 1 mA, I_C = 10 mA	12	
Output Capacitance	C_{CE}	—	8	—	pF	V_{CE} = 0V, f = 1 MHz		
Cut-off Frequency (–3 dB)	f_C	—	100	—	kHz	V_{CC} = 5V, I_F = 0.5 mA, R_L = 100Ω		

a. Current Transfer Ratio in percent is defined as the ratio of output collector current, I_C, to the forward LED input current, I_F, times 100.

chanhvinh.com

Switching Specifications (AC)

Unless otherwise specified, all minimum/maximum specifications are at recommended operating conditions. All typical values at T_A = 25°C, V_{CE} = 5V.

Parameter	Symbol	Min.	Typ.	Max.	Unit	Test Conditions	Fig.	Notes
Turn-on Time	t_{ON}	—	2	—	µs	I_F = 0.5 mA,	3, 13, 15	
Turn-off Time	t_{OFF}	—	40	—	µs	V_{CC} = 5V,	3, 14, 16	
Output Fall Time (90% to 10%)	t_F	—	1.2	—	µs	R_L = 2 kΩ		
Output Rise Time (10% to 90%)	t_R	—	20	—	µs			
Turn-on Time	t_{ON}	—	2	—	µs	I_F = 0.5 mA,	3, 13, 15	
Turn-off Time	t_{OFF}	—	30	—	µs	V_{CC} = 5V,	3, 14, 16	
Output Fall Time (90% to 10%)	t_F	—	1.2	—	µs	R_L = 750Ω		
Output Rise Time (10% to 90%)	t_R	—	10	—	µs			

Figure 3: Test Circuit for Response Time

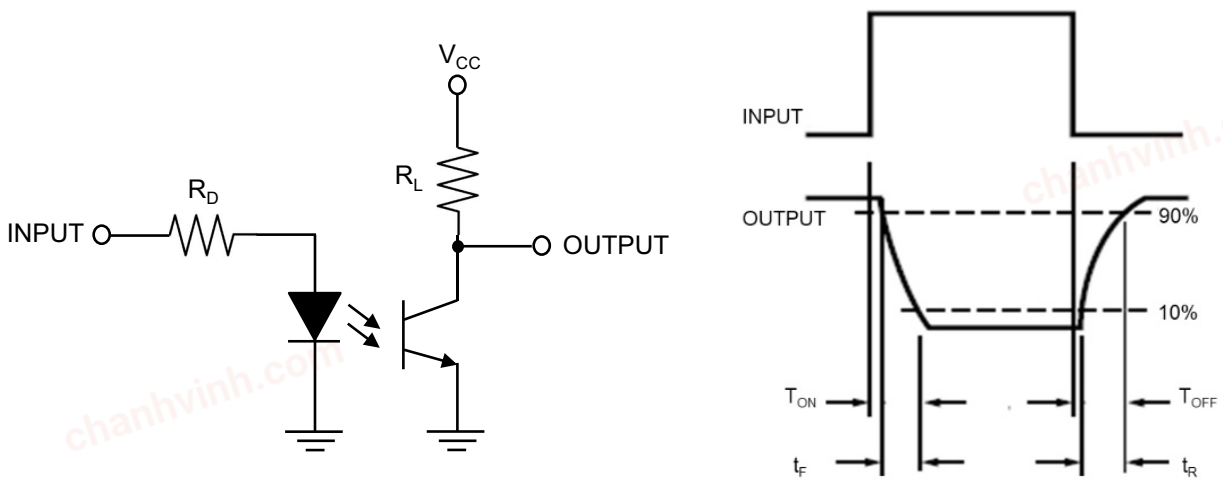

Package Characteristics

Parameter	Symbol	Min.	Typ.	Max.	Unit	Test Conditions	Note
Input-Output Momentary Withstand Voltage	V_{ISO}	4000	—	—	V_{RMS}	RH < 50%, t = 1 min. T_A = 25°C	
Resistance (Input-Output)	R_{I-O}	—	10^{12}	—	Ω	V_{I-O} = 500 V_{DC}	
Capacitance (Input-Output)	C_{I-O}	—	0.8	—	pF	f = 1 MHz	

chanhvinh.com

Typical Characteristics Plots and Test Conditions

Figure 4: Forward Current vs. Forward Voltage

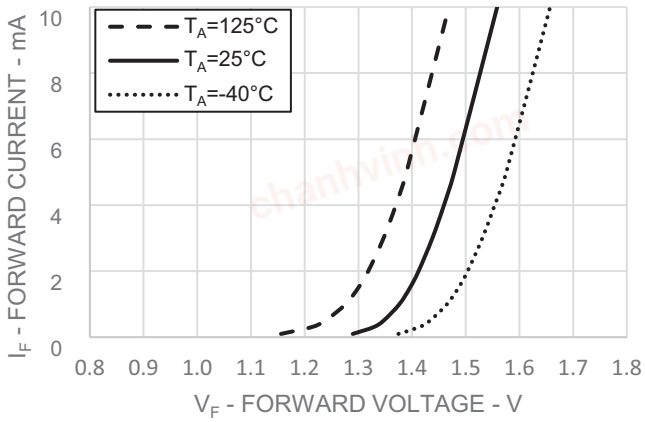

Figure 5: Collector Current vs. Forward Current

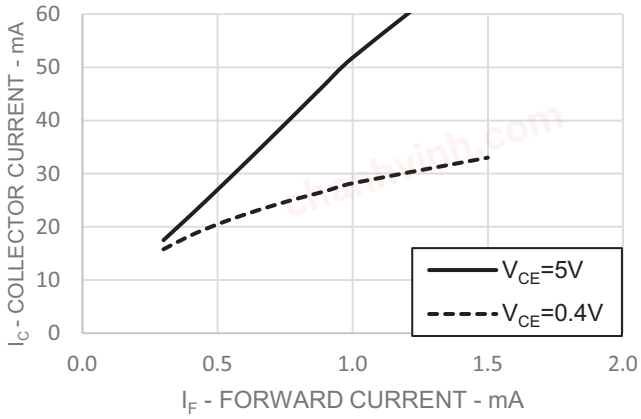

Figure 6: Collector Dark Current vs. Ambient Temperature

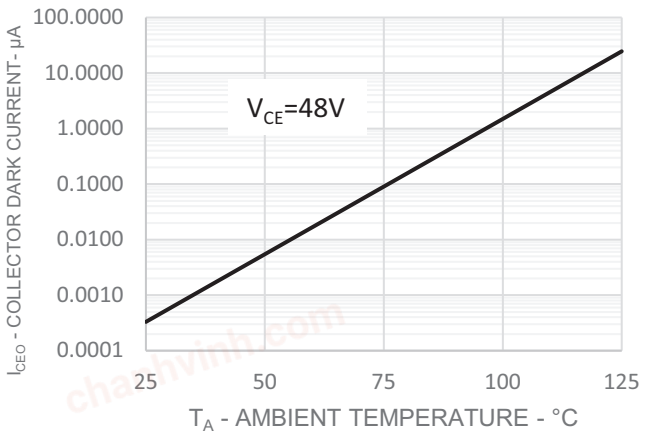

Figure 7: Normalized CTR vs. Forward Current

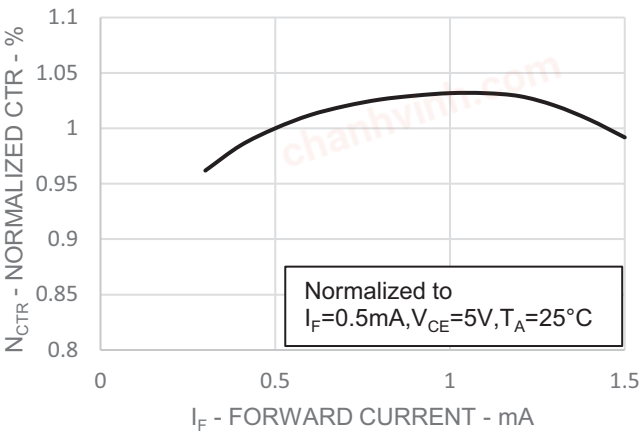

Figure 8: Normalized CTR vs. Ambient Temperature

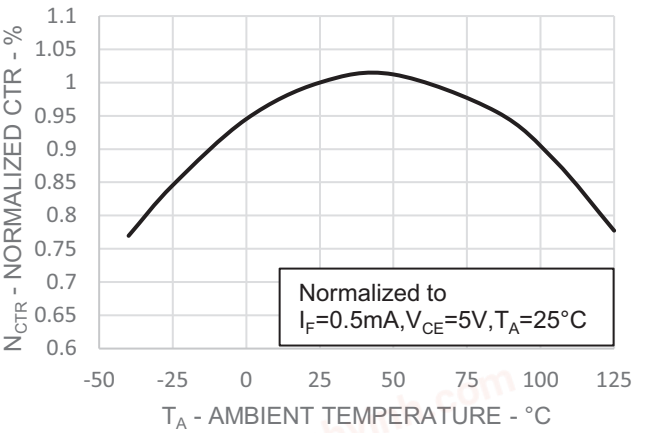

Figure 9: Collector Current vs. Ambient Temperature

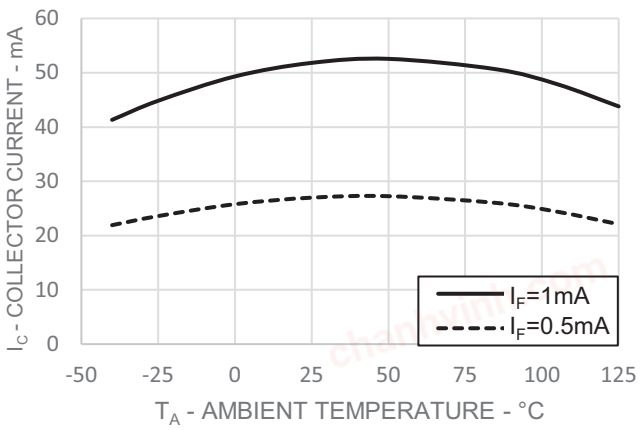

chanhvinh.com

Figure 10: Collector Current vs. Small Collector-Emitter Voltage

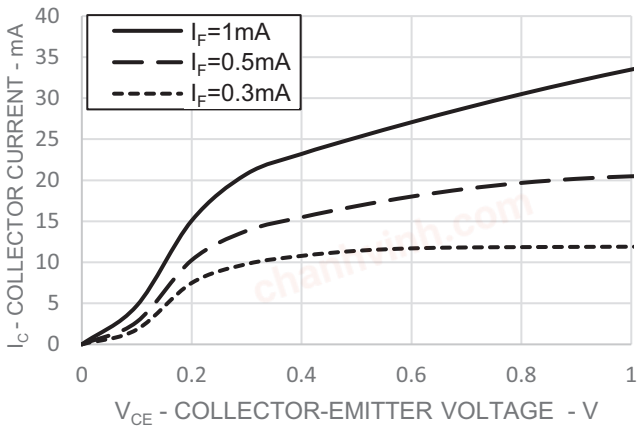

Figure 11: Collector Current vs. Collector-Emitter Voltage

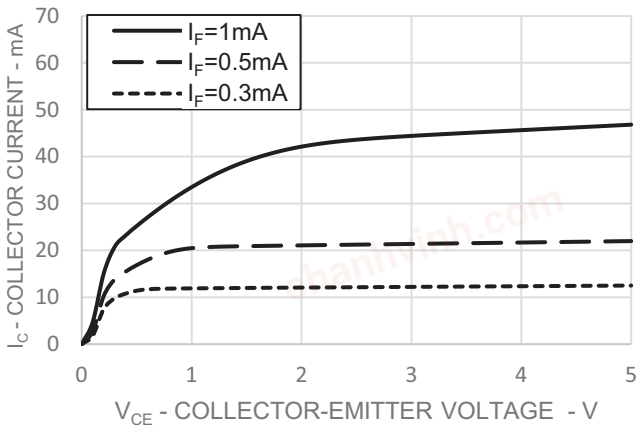

Figure 12: Collector-Emitter Saturation Voltage vs. Ambient Temperature

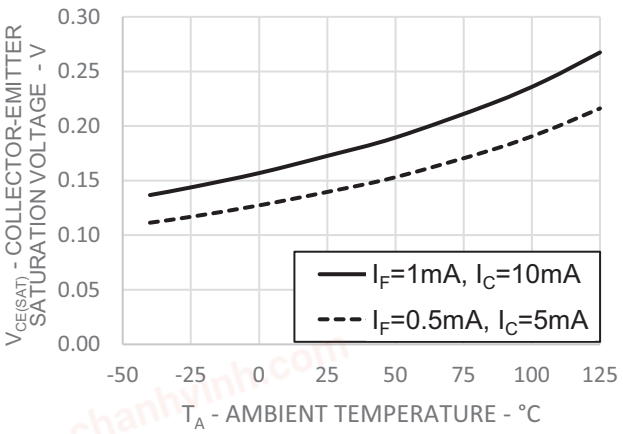

Figure 13: Turn-On Time vs. Load Resistance

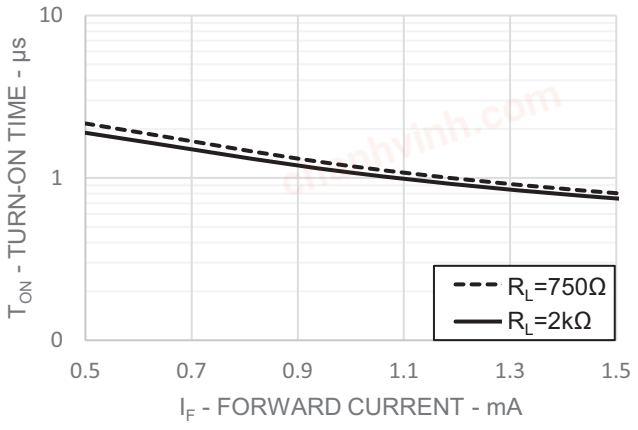

Figure 14: Turn-Off Time vs. Load Resistance

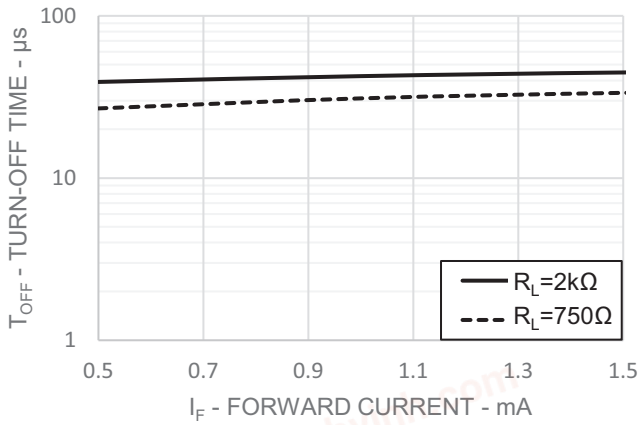

Figure 15: Turn-On Time vs. Ambient Temperature

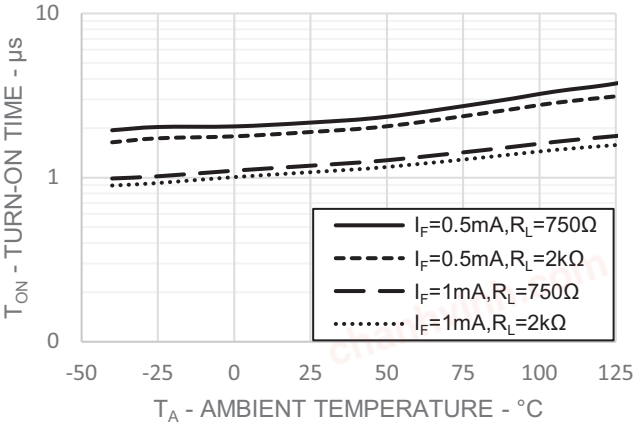

chanhvinh.com

Figure 16: Turn-Off Time vs. Ambient Temperature

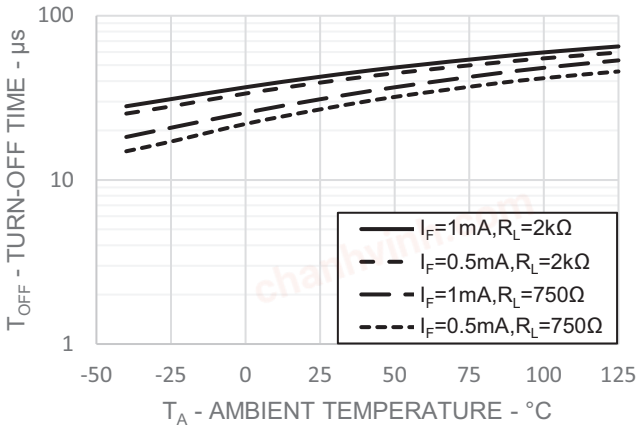

chanhvinh.com

Thermal Resistance Model for ACPL-M417T

The diagram of ACPL-M417T for measurement is shown in Figure 17. This is a multi-chip package with two heat sources, the effect of heating of one die due to the adjacent dice are considered by applying the theory of linear superposition. Here, one die is heated first and the temperatures of another die are recorded after thermal equilibrium is reached. Then, the second die is heated and first die temperatures are recorded. With the known ambient temperature, the die junction temperature and power dissipation, the thermal resistance can be calculated. The thermal resistance calculation can be cast in matrix form. This yields a 2 by 2 matrix for our case of two heat sources.

Figure 17: Thermal Resistance Measurements

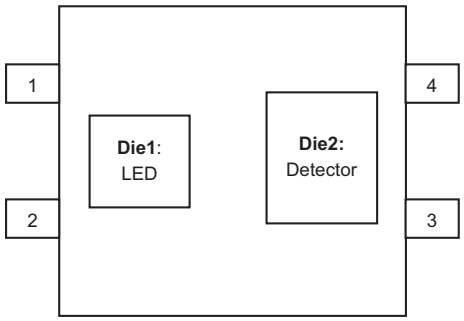

$$\begin{vmatrix} R_{11} & R_{12} \\ R_{21} & R_{22} \end{vmatrix} \times \begin{vmatrix} P_1 \\ P_2 \end{vmatrix} = \begin{vmatrix} \Delta T_1 \\ \Delta T_2 \end{vmatrix}$$

R_{11}: Thermal Resistance of Die1 due to heating of Die1 (°C/W)

R_{12}: Thermal Resistance of Die1 due to heating of Die2 (°C/W)

R_{21}: Thermal Resistance of Die2 due to heating of Die1 (°C/W)

R_{22}: Thermal Resistance of Die2 due to heating of Die2 (°C/W)

P_1: Power dissipation of Die1 (W)

P_2: Power dissipation of Die2 (W)

T_1: Junction temperature of Die1 due to heat from all dice (°C)

T_2: Junction temperature of Die2 due to heat from all dice (°C)

T_A: Ambient temperature (°C)

ΔT_1: Temperature difference between Die1 junction and T_A

ΔT_2: Temperature deference between Die2 junction and T_A

Measurement data on a low K (conductivity) board:

R_{11}: 334.4°C/W

R_{12}: 95.41°C/W

R_{21}: 91.56°C/W

R_{22}: 175.3°C/W

Measurement data on a high K (conductivity) board:

R_{11}: 257.7°C/W

R_{12}: 37.24°C/W

R_{21}: 30.69°C/W

R_{22}: 87.95°C/W

$$T_1 = (R_{11} \times P_1 + R_{12} \times P_2) + T_A$$

$$T_2 = (R_{21} \times P_1 + R_{22} \times P_2) + T_A)$$

Copyright © 2023–2024 Broadcom. All Rights Reserved. The term “Broadcom” refers to Broadcom Inc. and/or its subsidiaries. For more information, go to www.broadcom.com. All trademarks, trade names, service marks, and logos referenced herein belong to their respective companies.

Broadcom reserves the right to make changes without further notice to any products or data herein to improve reliability, function, or design. Information furnished by Broadcom is believed to be accurate and reliable. However, Broadcom does not assume any liability arising out of the application or use of this information, nor the application or use of any product or circuit described herein, neither does it convey any license under its patent rights nor the rights of others.